Schwarze Industries, Inc.

A9 MONSOON

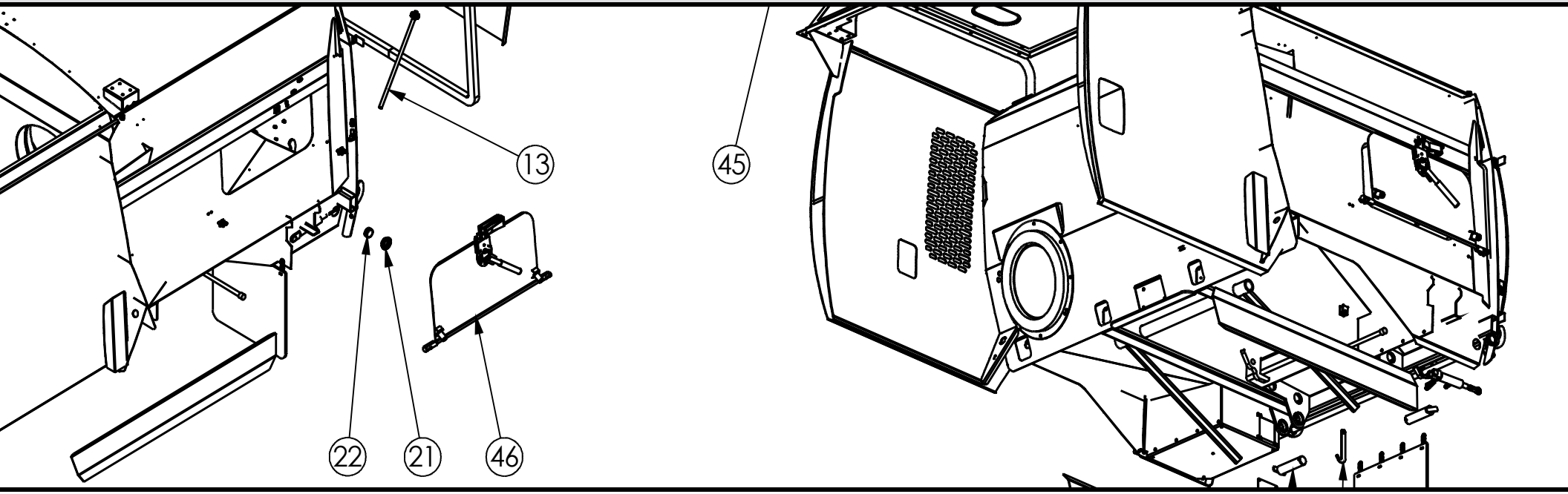

Parts Manual

revised 05/20

MEMBER OF THE ALAMO GROUP
ALWAYS ON THE CUTTING EDGE

© Schwarze Industries

In This Manual

1 Instrumentation 6
203667 - CONSOLE KIT, LHS G/B 7
204M31 - ELECTRICAL. 8
65660 - CONTROL BOX 9
66037 - CONSOLE 10
203459 - GAUGE, HOUR METER 11
204R97 - INSTALL,ELEC, SIDE BLAST HEAD. 12

2 Debris Pickup. 13
204H52 - SWEEPING HEAD DELUGE. 14
203P52 - HAND HOSE SPRING BOOM 15
60024 - AHH NOZ & STOB 16
204L67 - REMOTE THROTTLE 17
204P48 - HAND HOSE, STANDARD ELE BOOM 18
204P49 - HAND HOSE, HD ELE BOOM. 19
204H53 - HAND HOSE EXTENSION RACK SINGLE. 20
204N15 - HAND HOSE EXTENSION RACK. 21
204R55 - HAND HOSE EXTENSION RACK 3X4 22
204R52 - HAND HOSE EXTENSION RACK 4X4 23
204W49 - HAND HOSE EXTENSION, PACCAR 24
204X98 - DOUBLE, HAND HOSE EXT, PACCAR. 25
204U89 - HAND HOSE EXTENSION 26
204V68 - DOUBLE, HAND HOSE EXT 27
204K35 - HAND HOSE WATER WITH HOPPER SPRAY . . 28
204K97 - HAND HOSE WATER W/O HOPPER SPRAY . . . 29
300279 - REMOVABLE PRESSURE TRANSITION 30
204P45 - HEAD STANDARD WITH REM. TUBES 31
204P35 - STANDARD HEAD WITH REM. TUBES 32
203J10 - BLAST ORIFICE RUBBER. 34
204T20 - SWEEPING HEAD WITH 3-STAGE PUMP MOUNT35
204P87 - PRESSRE TUBE, BOLT-ON, SPRAY 36
204S00 - HEAD, SIDE BLAST 37
204R90 - HEAD, SIDE BLAST, XTRA SUCTION NOZZLE. . 39

3 Hopper 41
203681 - HOPPER SPRAY BAR, 4 NOZZLES 42
203939 - SPRAY BAR HOPPER 7 NOZZLES. 43
204S02 - EXT HOPPER SWITCH LH 44
204S03 - EXT HOPPER SWITCH RH. 45
203B77 - HOPPER DELUGE 46
204G28 - HOPPER DELUGE 4 NOZZLES 48
203640 - SOUND SUPPRESSION 49
204R41 - HOPPER SHAKER 50
203G23 - HOPPER DOOR OPEN INDICATOR 51
204H12 - AUTO DRP DN SCREEN BRACKET. 52
204H11 - AUTO DRP DN SCREEN BRACKET ARM 53
204H83 - HOPPER SCREEN SHAKER 54
204M67 - DROP DOWN SCREEN, SS 55
203M62 - DROP DOWN SCREEN 56
203J00 - REMOTE HOPPER DD SCREEN A9. 57
203M63 - DROP DOWN SCREEN, SS 58
203K41 - SS REMOTE HOPPER DD SCREENS A9 59
204V13 - HOPPER ASSY A9T E-A MS 60
204Q77 - BRAKE LIGHT REAR CENTER 63
203L86 - HOPPER, DUMP DOOR ASSY, A9 64
204M27 - CYLINDER, DOOR A9, ASSY, ORFS 65
204W45 - CYLINDER,DR LTCH C-BAL 66
204M66 - HOPPER TOOLBOX DOOR, SS. 67
204M95 - HOPPER INSPECTION DOOR, CURB SIDE 68
204M30 - HOPPER ASSY A9T MS T4F 69
204M94 - HOPPER INSPECTION DOOR, ROAD SIDE. . . . 71
204R38 - CYLINDER, HOPPER DOOR LATCH 72
204J81 - HOPPER, SS 73
203L95 - HOPPER DUMP DOOR, SS 75
203L84 - CYLINDER, DUMP DOOR LOCK 76
203L85 - CYLINDER, DUMP DOOR. 77
204V14 - HOPPER ASSY A9T E-A 304SS 78
204Q76 - BRAKE LIT,REAR CNTR, 3CR12 81
204M88 - HOPPER ASSY, A9T, 3CR12, T4F 82

Table of Contents

204M61 - HOPPER DUMP DOOR, SS 84
204U60 - INSTALL, HOPPER SS W/ENGN DOOR 85
204V07 - HOPPER ASSY A9T CUMMINS 88
204V08 - HOPPER ASSY A9T,CUMMINS,304SS. 90
204V09 - HOPPER ASSY A9T,CUMMINS,3CR12 93
204V15 - HOPPER ASSY A9T,E-A,CUMMINS,MS 96
204V16 - HOPPER ASSY A9T,E-A,CUMMINS,304S 99
204V05 - HOPPER ASSY A9T,E-A,CUMMINS,3CR12 102

4 Broom(s). 105
204K02 - GUTTER BROOM, LH KIT. 106
204K03 - GUTTER BROOM, RH KIT 110
204K68 - GUTTER BROOM, AUTOCAR 114
204K69 - GUTTER BROOM, RH AUTOCAR 117
203M90 - GUTTER BROOM GEO, LH 121
203M89 - GUTTER BROOM GEO, RH. 122
203M91 - GUTTER BROOM GEO, DUAL. 123
203V40 - GB AIR DOWN PRESSURE 124

5 Body 126
203674 - SIGHT GAUG, WATER TANK, SIDE 127
204Q61 - HP WTR W/AIR TK 128
68185 - KIT, HIGH PRESSURE WASHDOWN 130
204Q37 - DEF TANK MOUNT 131
204X34 - 350 GALLON WATER TANK SIGHT GAUGE . . . 132
526049 - SIGHT GA, 42 133
203680 - FRONT SPRAY BAR 134
204Q53 - HP WTR W/TB. 135
204Q54 - HP WATER W/TANK 137
204U48 - HP WATER SW, REAR TANK 139
204Q55 - HP WTR W/TT. 141
204Q59 - HOSE REEL M2 143
204Q56 - HOSE REEL M2 144
204Q58 - HOSE REEL 350 TK 145
204Q64 - HP WATER SW 146
204T98 - TRAY, DUAL WP HI-PRESS 148
204U00 - TRAY, DUAL WP 149
204Q63 - REAR WATER TANK. 150
204N31 - INTAKE RELOCATION, NY DOT. 151
204J98 - AIR INTAKE RELOCATION 152
203Z21 - BRAKE LIGHT, REAR CENTER 153
203G42 - SPRAY TIP 154
BACKUP ALARMS 155
204N55 - BUMPER REAR. 156
204Q19 - TRUCK KIT, A9T, M2 184 157
203V10 - SPRING KIT, RUBBER, GMC 158
204P63 - LOAD WEIGHT INDICATOR 159
204L19 - FRAME. 160
203U21 - BARLIGHT REAR 161
203Y67 - STROBE, REAR W/GUARD, LED. 162
203685 - ARROWBOARD, TRAFIC GUIDE 163
203Y95 - STROBE CAB 164
204B51 - STROBE, CONV CAB 165
203Z74 - STROBE REAR DUAL. 166
204L46 - STROBE REAR QUAD 167
204C21 - ARROWBOARD, SPLIT 2 PCS 168
204V02 - ARROWSTICK, TAD8 169
204T22 - BARLIGHT 56” CAB. 170
204B10 - MINI BARLIGHT. 171
204L11 - STANDARD WATER. 172
524800 - STRAINER 1-1/4” 173
525019 - VENT SENSOR 174
204N35 - TRAY, DUAL WP 175
60851 - 4-STAGE MANIFOLD. 178
522393 - WATER VENT 179
204W62 - TANK, WATER 356 GAL, M22 T4F. 180
203H33 - WATER TANK VENT 182
204V90 - 356G TANK WITH Y-STRAINER FILL 183
650550 - WATER TANK AIR GAP 185
204V89 - WATER FILL 2/Y STRAINER. 186

Table of Contents

204K15 - WATERFILL HARDLINE 187
204Q05 - FRONT WALKDECK 188
204S98 - LANYARD WITH EYE BOLT 189
204X47 - WATER FILL. 190
204L70 - WATER FILL HARDLNE W/STRAINER 191
203G90 - WATERFILL (350 GAL) 192
204R57 - FUEL SYSTEM INDEPENDENT 193
204K89 - TOOL TRAY WITHOUT TOOLBOX 194
204K96 - TOOL TRAY WITH TOOLBOX. 195
203465 - INDICATOR, AF REST, CHASSIS 196
203X78 - SELF DUMP MAGNET M2 197
204A38 - BAR MAGNET MOUNT 90” 198
203Z84 - BAR MAGNET 90” 199
204H16 - MAGNET BAR 90” MOUNT M2. 200
204H15 - MAGNET BAR 90” 201
204H17 - BRKT, UPSTOP W/SENSOR ASSY 202
204L62 - SELF DUMP MAGNET JIPCO M2 203
204Q25 - TRUCK KIT, M2 A9T, SWB 164” 204
204L87 - RUNNING BRDS M2 JIPCO 205
203Q23 - ASSY, BOX, BATT, DUAL, IH-08 206
204A34 - TANK, FUEL INTERNATIONAL 207
204M53 - LOAD WEIGHT INDICATOR TIER4 208
204D68 - SELF DUMP MAGNET, IH. 209
204A37 - BAR MAGNET MOUNT 90” IH. 211
203O02 - A-SER, BATT-BOX KIT T-7500 212
203N37 - CENTER DEFLECTOR 213
204A33 - FUEL TANK M2 214
204L15- BAR MAGNET 90” MOUNT. 215
203U23 - LED BARLIGHT, IH 216
204A25 - BAR MAGNET MOUNT, COE 217
203Z75 - STROBE, COE. 218
204L36 - STROBE FRONT SHROUD. 219
204J76 - BARLITE, PBILT 220
204L26 - WATER TANK SHIELD. 221
204S10 - TRUCK KIT, PB 222
204P03 - SELF DUMP MAGNET, PB/KW 224
204T46 - ENGINE SCREENS TIER 4 225
203064 - INDICATOR, AF RSTCT, IN CAB 226
204T47 - ENGINE SCREENS TIER 3 227
miscellaneous 228

6 Power Module 230
204K91 - GB POWER TILT LH 231
204K92 - GB POWER TILT RH 232
204T80 - ENGINE BAY THROTTLE SWITCH. 233
204M29 - SEQUENCE DOOR VALVE. 234
204U72 - LIMB GUARD, CUMMINS 235
203J02 - REMOTE GREASE FITTING FAN 236
204L08 - KIT, HOSE HOPPER LIFT 237
204P85 - HYDRAULIC TANK 238
204X14 - HYDRAULIC TANK 239
204R34 - POWER MODULE JD115 240
204K79 - ENGINE JD115 242
204L04 - HYDRAULICS STANDARD 243
204L05 - MANIFOLD, FRONT. 246
60090 - MANIFOLD DO2 W/G/B CIR.. 247
204L06 - MANIFOLD REAR 248
60089 - MANIFOLD, DO2 W/G/B CIR. 249
204J94 - HYDRAULIC PUMP 250
204R35 - POWER MODULE JD134 251
204J66 - ENGINE JD140. 253
204L14 - POWER MODULE JD115 TIER 4 254
204M02 - POWER MODULE JD140 TIER4 256
204T16 - POWER MODULE T3 JD115 258
203Q59 - ENGINE JD-T3-08 260
204T19 - POWER MODULE T3. JD140 262
203P73 - ENGINE JD 140HP TIERIII 264
204U63 - POWER MODULE, CUMMINS 265
204U58 - ENGINE 3.8L CUMMINS 267
204T13 - HYDRAULIC TANK, CUMMINS 268

Table of Contents

7 Schematics. 269
SK-2096 - HOUR METER 270
SK-2439 - ENGINE BAY THROTTLE 271
65653 / 66037 - Console Wiring 272
A8 CPU Box Wiring 273
Wiring. 274
CPU Power Wiring. 275
#1 Water Tray CPU Box Wiring 276
#2 Hopper Scissor DC Pump CPU Box Wiring 277
#3 Hyd Tank Manifold CPU Box Wiring 278
#4 Console CPU Box Wiring 279
#5 John Deere Engine CPU Box Wiring 280
#6 Fused Power Connector CPU Box Wiring 281
CPU Box, Circular Junction Connector Service Information 282
CPU Box, Fuse Block Service Information 283
CPU Box, CPU Connector Service Information. 284
CPU Box, Diode & Resistor Cap Service Information 285
SK-2422 SIDE BLAST HEAD 286
SK-2352 HOPPER SHAKER. 287
66677 HARNESS, REM THROTTLE/HYD BOOM 288
66689 HARNESS, REM THROTTLE/E BOOM 289
66646 HARNESS, EXTENSION, CAN MODULE 290
65679 HARNESS, WATER TRAY 291

Instrumentation

1

203667 - CONSOLE KIT, LHS G/B

ITEM NO.	PART NUMBER	QTY.	DESCRIPTION
1	26098	2	SWITCH, SP.O-F
2	Mirror26100	1	SWITCH, DP. (O)-F-O
3	28272	1	BREAKER, 80 AMP

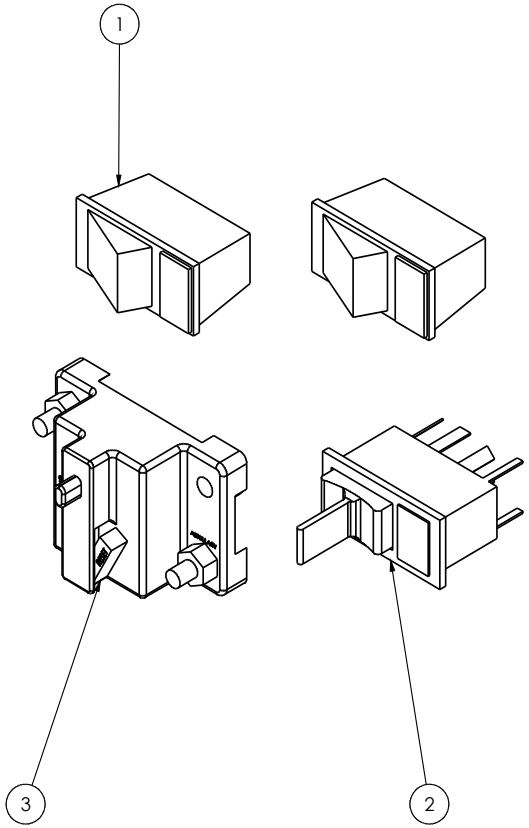

204M31 - ELECTRICAL

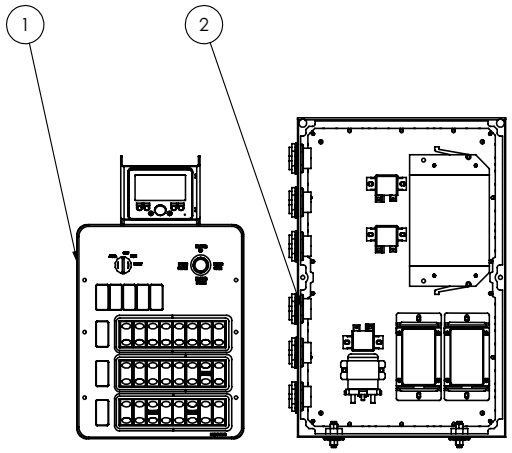

	ITEM NO.	PART NUMBER	DESCRIPTION	QTY.
	1	66037	CONSOLE, A7 & A9 T4F	1
	2	65660	CONTROL BOX ASSY, A SERIES	1
	3	65679	HARNESS,WTR TRAY DUAL A-SERIES	1
*	4	65681	HARNESS, HYD, A-SERIES #3	1
*	5	65683	HARNESS, POWER A-SERIES #5	1
*	6	65690	HARNESS, BATTERY, A-SERIES	1
*	7	65878	HARNESS, HOPPER, A7T	1
*	8	66053	HARNESS, RH MANIFOLD	1
*	9	64595	CONNECTOR, 2WAY RECEPTACLE	1
*	10	64610	WEDGELOCK, 2 WAY RECEPTACLE, D	1
*	11	65753	PARKBRAKE INTLOCK SWITCH,FL M2	1
*	12	21346	1/4" X 1/8" NPT BRASS BUSHING	1
*	13	65904	HARNESS REAR A7T	1
*	14	66054	HARNESS, LH MANIFOLD	1
*	15	66976	TEE, 3/8 TUBE X 1/4 FNPT	1

* ITEMS NOT SHOWN

65660 - CONTROL BOX

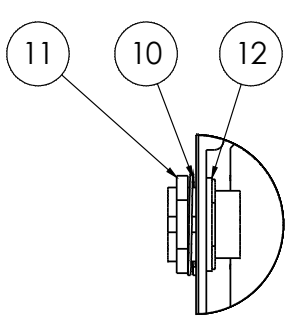

DETAIL B

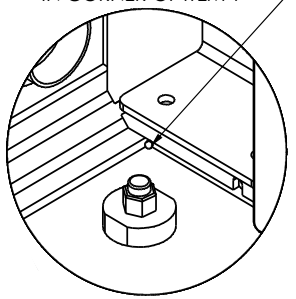

DETAIL A
ITEM 4 HIDDEN FOR CLARITY

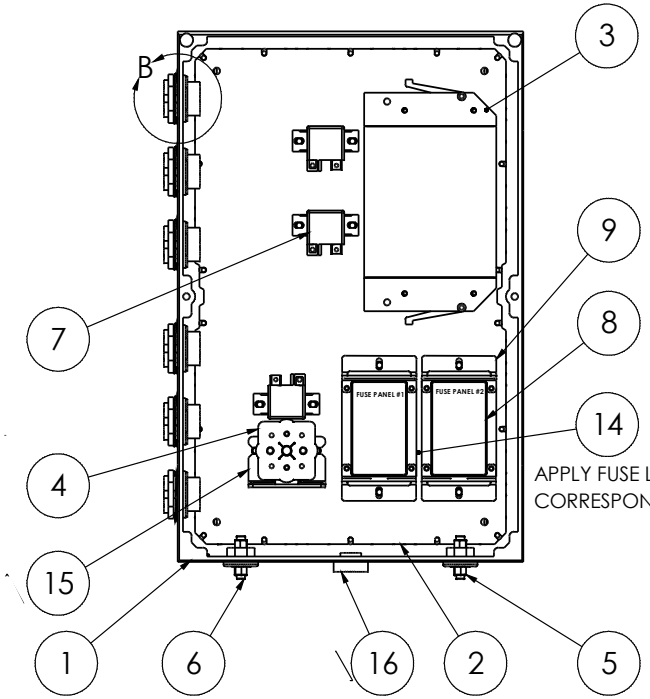

APPLY FUSE LABEL ON INSIDE OF
CORRESPONDING FUSE PANEL COVER

ITEM NO.	PART NUMBER	DESCRIPTION	QTY.
1	64414	NEMA 4 ENCLOSURE (24 X 16 X 6)	1
2	525022	PLATE, BACKING A SERIES CONTR	1
3	64420	IFM DOUBLE CONTROLLER	1
4	68200	CONTACTOR,200A CONT, SPNO, 15V	1
5	64534	BATTERY FEEDER STUD, BLK	1
6	64533	BATTERY FEEDER STUD, RED	1
7	26106	RELAY, 75 AMP	3
8	65659	PANEL, FUSE & MICRO RELAY	2
9	5221435	BRACKET, FUSE PANEL MOUNT	4
10	64544	WASHER, PANEL 24 DEUTSCH	6
11	64545	PANEL NUT, SIZE 24 DEUTSCH	6
12	64546	GASKET, SIZE 24 DEUTSCH	6
13	SK-2405	SCHEMATIC, A-SERIES CPU BOX WIRING	1
14	65952	LABEL, FUSE BLOCK A-SERIES	1
15	5223274	BKT, CONT BOX, RELAY	1
16	65768	DRAIN VENT, POLYPROPLYLENE	1

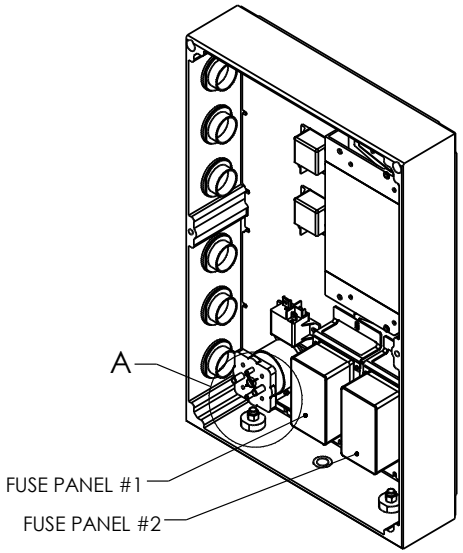

66037 - CONSOLE

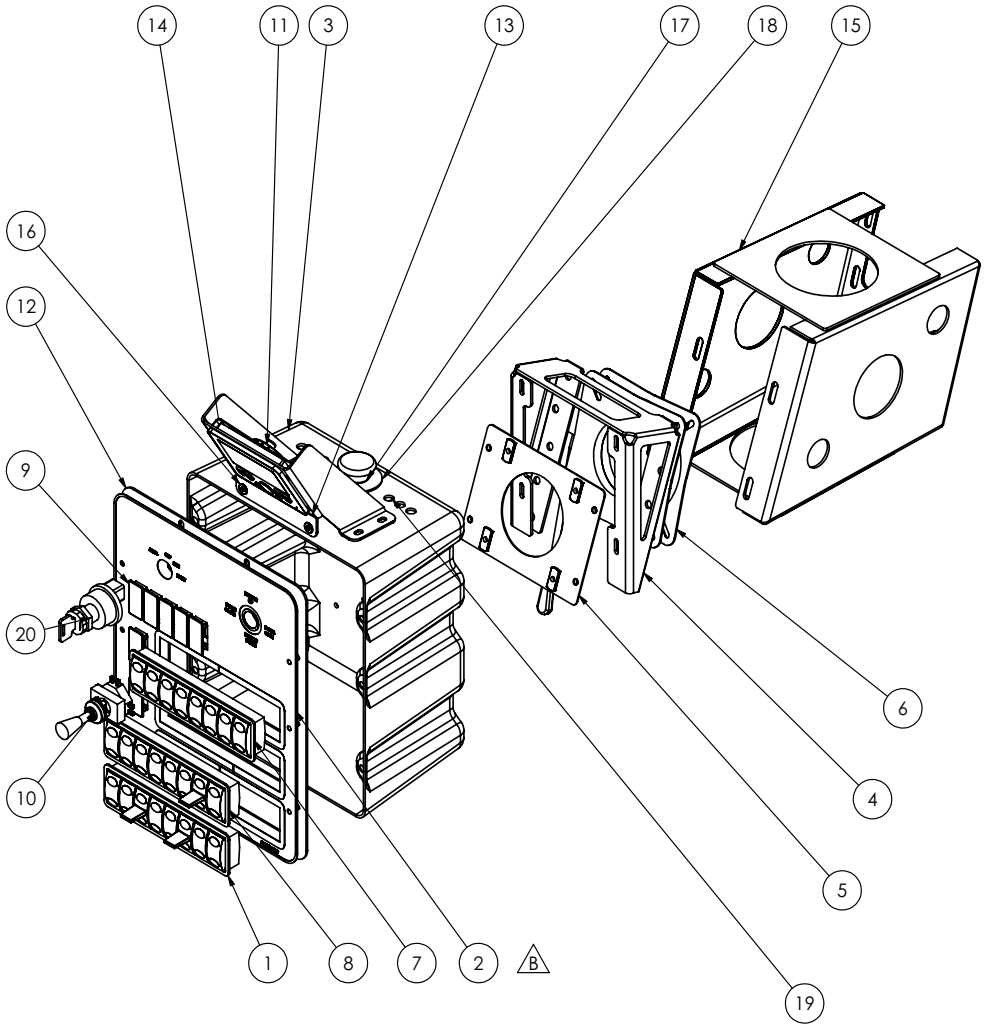

ITEM NO.	PART NUMBER	DESCRIPTION	QTY.
1	65648	HMI SWITCH ASSY, 8 BANK A SERI	1
2	65953	CNSL OVERLAY, A7 & A9, T4F	1
3	61307	BASE,CONSOLE,A7000-10	1
4	5219888	A7 CONSOLE STAND, ANGLED	1
5	651042	MOUNT PLATE CONSOLE, M6CO	1
6	61932	12 POSITION LOCKING SEAT SWIVE	1
7	65646	HMI SWITCH ASSY, 8 BANK A SERI	1
8	65647	SWITCH, 8 SWITCH BANK, A SERIE	1
9	62613	PLUG, CONTURA SWITCH HOLE	8
10	21361	JOYSTICK RP005, EAO 44-800.8	1
11	65666	MONITOR, A-SERIES	1
12	5221294-A	PANEL, CONSOLE TOP A8T	1
13	5221294-B	MOUNT, MONITOR ASER	1
14	5221308	MOUNT, CR0452 MONITOR	1
15	525044	CONSOLE STAND WELDMENT	1
16	26634	NUT, 10-24 JACK, 0-3/16 GRIP	2
17	64522	RED PUSH BUTTON E-STOP	1
18	64523	E-STOP SIGN	1
19	64524	MOUTING ADAPTER FOR E-STOP	1
20	65992	SWITCH, IGNITION 6 PIN DUETSC	1

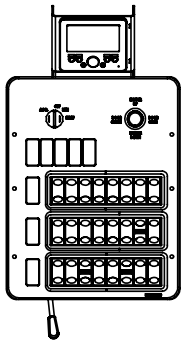

65646 / 65647 / 65648 - CONSOLE SWITCH BANKS

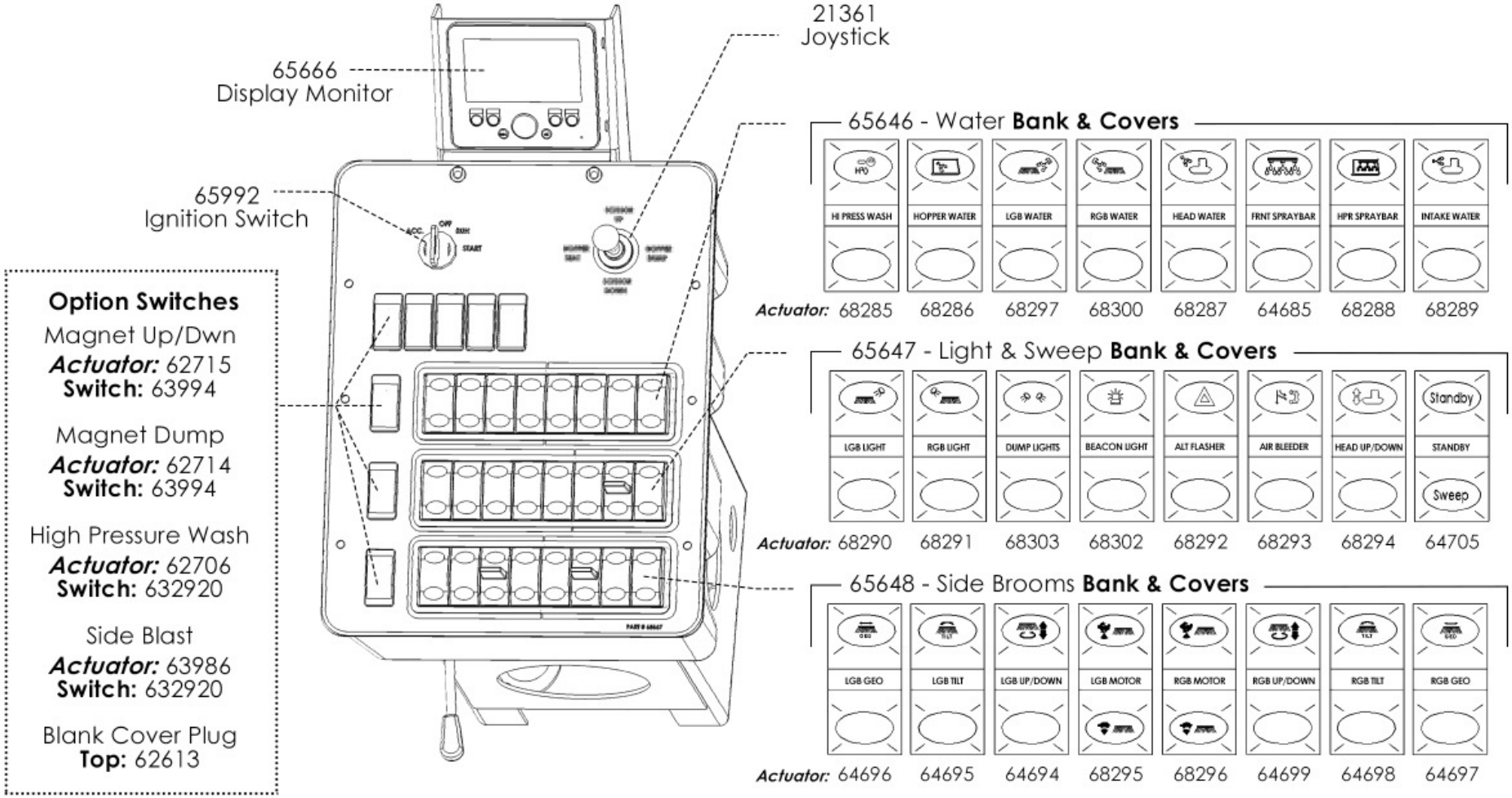

203459 - GAUGE, HOUR METER

ITEM NO.	PART NUMBER	QTY.	DESCRIPTION
1	20998	1	HOUR METER
2	23402	1	GROMMET 1.5" ID X 2.125" OD

ITEMS NOT SHOWN

ITEM NO.	PART NUMBER	QTY.	DESCRIPTION
3	63651	1	FUSE HOLDER,30A,12GA, IN LINE
4	SK-2096	1	HOUR METER SCHEMATIC

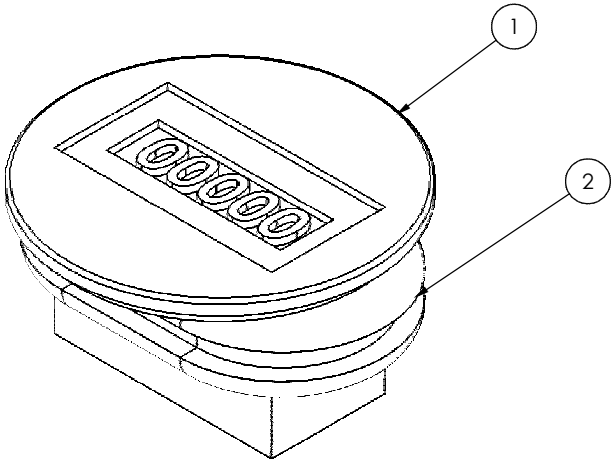

204R97 - INSTALL,ELEC, SIDE BLAST HEAD

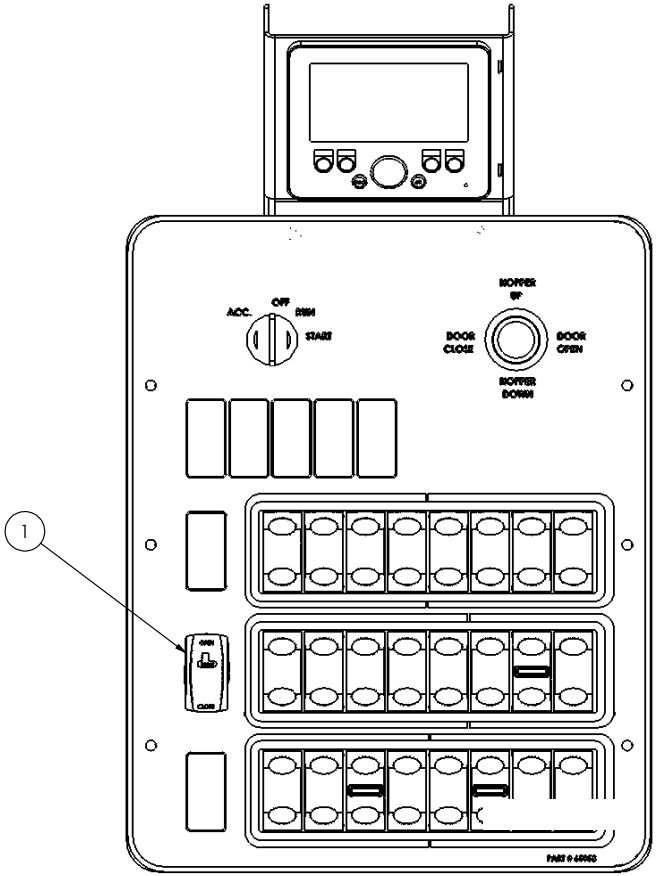

ITEM NO.	PART NUMBER	QTY.	DESCRIPTION
1	63986	1	SWITCH ACTUATOR, SIDE BLAST, CARLING
2	62920	1	CARL, MOM-OFF-MOM, FLUSH BKT
3	22945	2	RELAY, SPDT 40A 12VDC CUBE
4	22946	2	CONNECTOR HOUSING,RELAY
5	64606	1	PLUG, 2 CONTACT, SIZE 12 DTM
6	64619	1	WEDGELOCK, 2 WAY RECEPTACLE, D
7	61544	1	CONNECTOR, DEUTSCH, RP
8	64611	1	WEDGELOCK, W2S, DT PLUG
9	28696	2	PIN, MALE 12 GA, DEUTSCH
10	28691	2	TERMINAL, SOCKET, SZ16, 14GA
11	28692	2	TERMINAL, PIN, SZ16, 14GA
12	20281	16	HOSE, FLEXGUARD 250
13	20311	1	WIRE, 14 - BLACK
14	21636	1	WIRE, 18 - BLACK
15	20313	1	WIRE, 14 - RED
16	20316	17	WIRE, 14 - GREEN
17	21628	17	WIRE, 14 - GREEN/WHITE
18	64595	1	CONNECTOR, 2WAY RECEPTACLE
19	64610	1	WEDGELOCK, DT, 2POS RECPT

SEE SK-2422 FOR SIDE BLAST HEAD WIRING DIAGRAM

Debris Pickup

2

204H52 - SWEEPING HEAD DELUGE

ITEM NO.	PART NUMBER	QTY.	DESCRIPTION
1	300802	1	PRESSURE TRANSITION W/ DELUGE
2	23644	1	CAM, 2.0 MALE LOCK
3	23643	1	DUST CAP, 2" WATER FILL
4	24075	1	LANYARD, 6"
5	62536	1	2" STREET ELL, GALV.

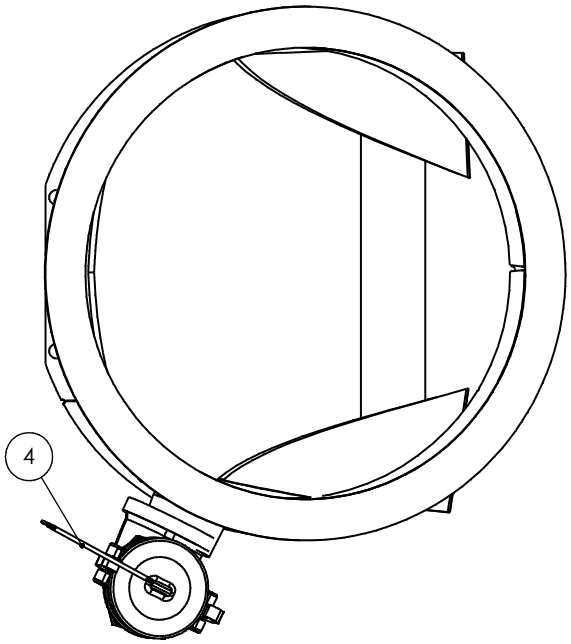

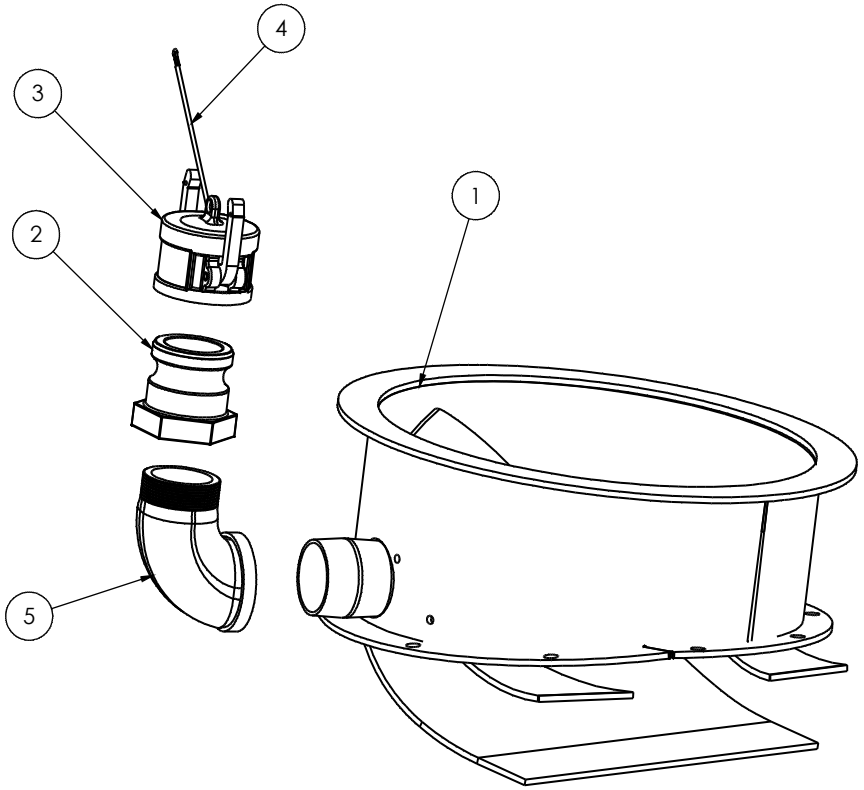

203P52 - HAND HOSE SPRING BOOM

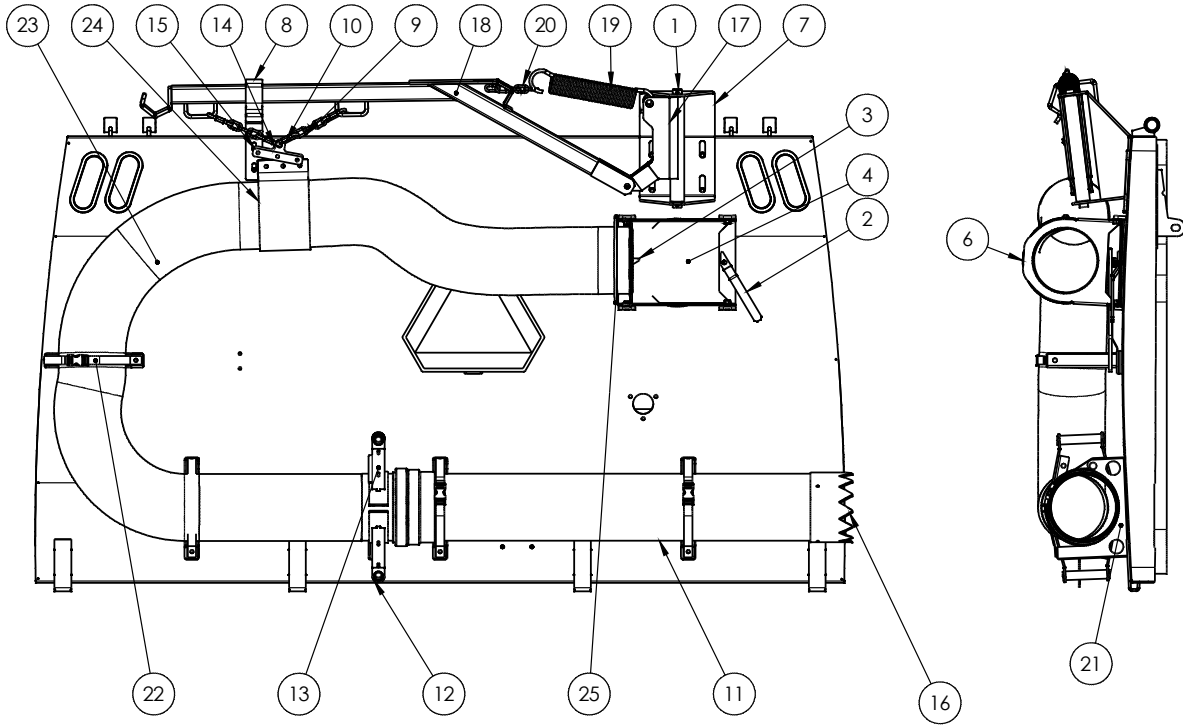

ITEM NO.	PART NUMBER	DESCRIPTION	QTY.
1	5202616	PIN, BOOM SWING	1
2	5202634	HANDLE HH TRANS DOOR	1
3	5202633	HAND HOSE LATCH LEFT	1
4	520684	HAND HOSE COVER PLATE	1
5	523194	BLOCKOFF PLATE,W/HANDLE 2004 A7000	1
6	521079	HAND HOSE 8" TRANSITION PLATE	1
7	522926	BOOM BKT. ASSY	1
8	5214231	BOOM KEEPER, A9	1
9	20814-3	CHAIN,1/4" 3 LINKS	2
10	21924	ATTACH LINK	4
11	60024	AHH NOZ & STOB ASSY	1
12	525161	WLD, FMLE HLF CLMP HNDLE, AHH	1
13	525160	WLD, MLE HLF CLMP HNDLE, AHH	1
14	3004003	HOSE HANGER, H/H	1
15	3004603	HOSE HANGER, RETAINER, H/H	2
16	5215415	CROWN, AHH TUBE END	1
17	520685	WELD,PIVOT,BOOM,AHH,A7	1
18	520699	HAND HOSE SPRING BOOM	1
19	21478	SPRING, 2" X 12"	1
20	20814-5	CHAIN, 1/4 5 LINKS	1
21	5222521	HANGER, HAND HOSE, A-SERIES	4
22	65977	STRAP, CINCH 20", BUCKLE	4
23	60181-12'	HAND HOSE KANAFLEX 8"	1
24	29341	FLAP, HAND HOSE A7,A8,9	1
25	20823	HOSE CLAMP 10"	1
26	66677	HARNESS, HYDR BOOM/SPRING REMOTE THRTL	1

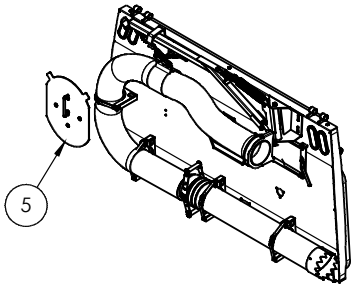

60024 - AHH NOZ & STOB

ITEM NO.	PART NUMBER	DESCRIPTION	QTY.
1	60017	WELD,NOZ,8X52, AHH	1
2	60018	AHH MALE END, STOB END	1
3	60021	AHH RING CLAMP	1
4	60022	AHH LIP SEAL	1

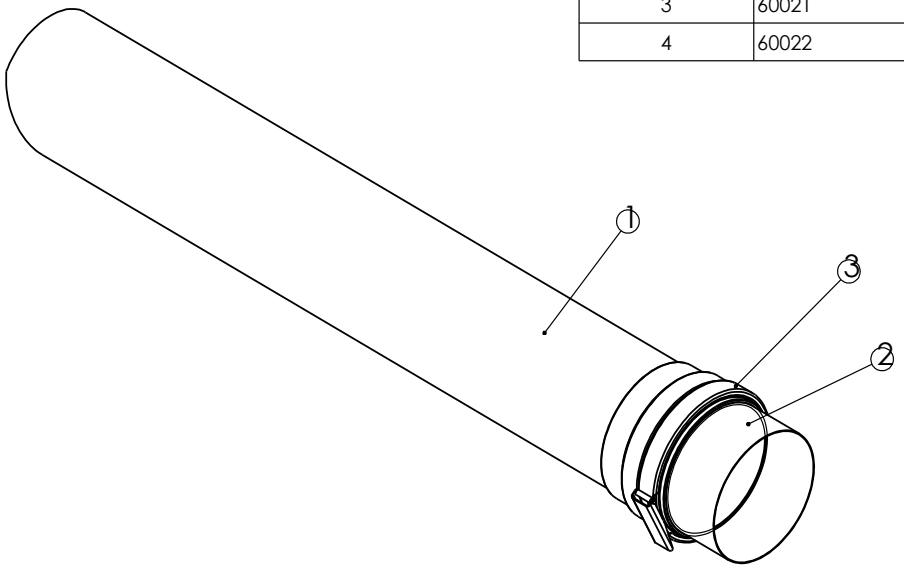

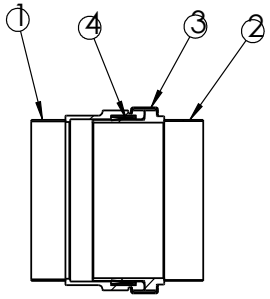

SECTION D-D

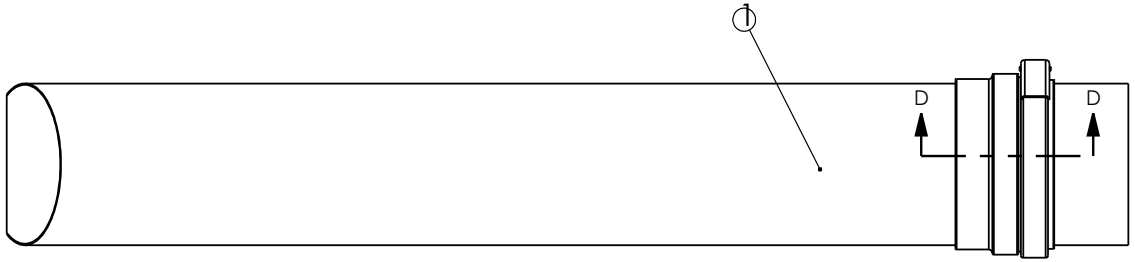

204L67 - REMOTE THROTTLE

ITEM NO.	PART NUMBER	QTY.	DESCRIPTION
1	525151	1	REMOTE THROTTLE WELD, A7T
2	523674	1	COVER,SW,REMT-THRTL,A7-AHH
3	62920	1	CARL, MOM-OFF-MOM, FLUSH BKT
4	63212	1	SWITCH ACTUATOR, FAST/SLOW

REMOTE THROTTLE SWITCH		
TERMINAL	WIRE COLOR	WIRE LABEL
1	BROWN/BLACK	THROTTLE DOWN
2	RED	12V SENSOR POWER
3	TAN	THROTTLE UP

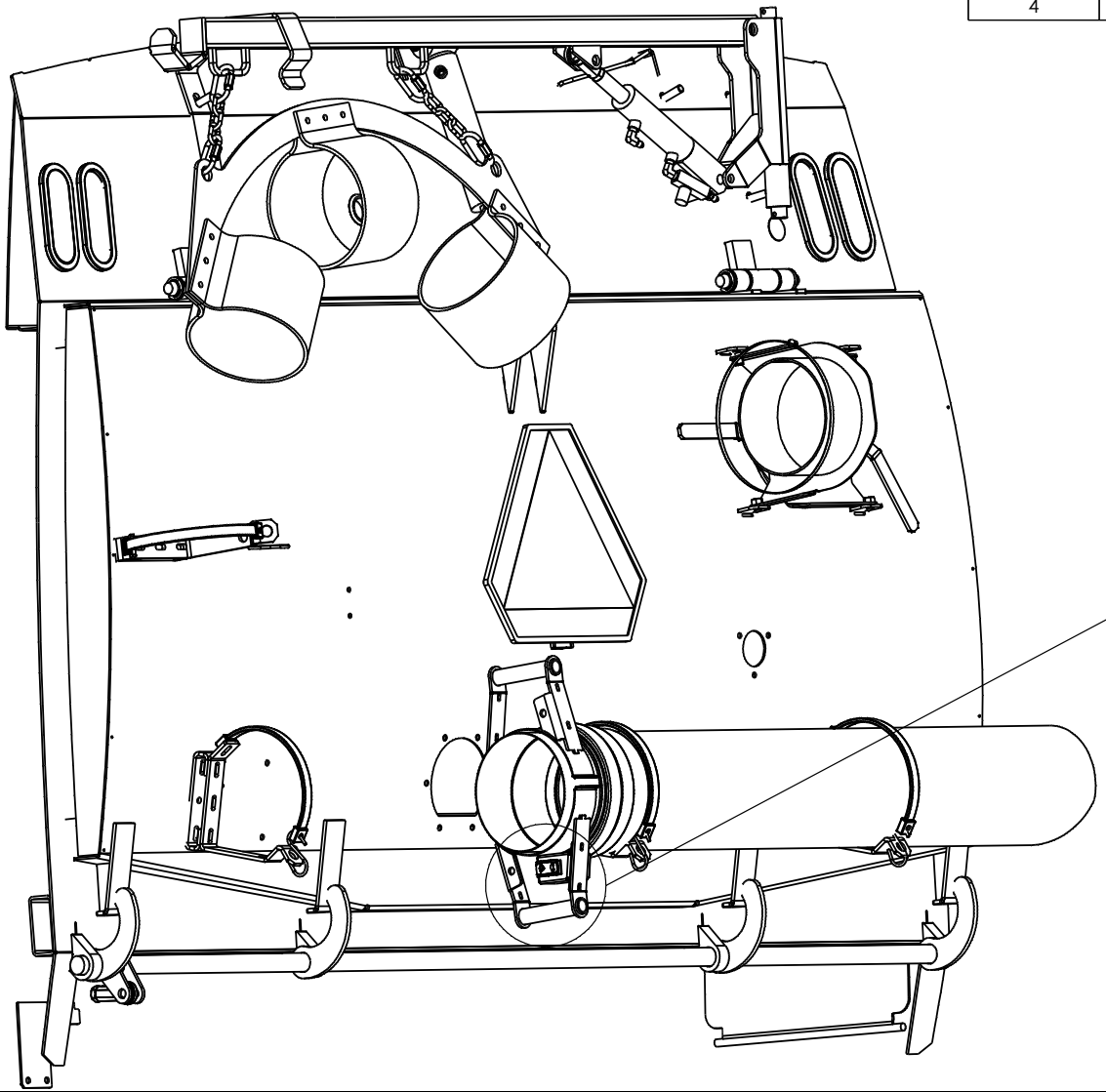

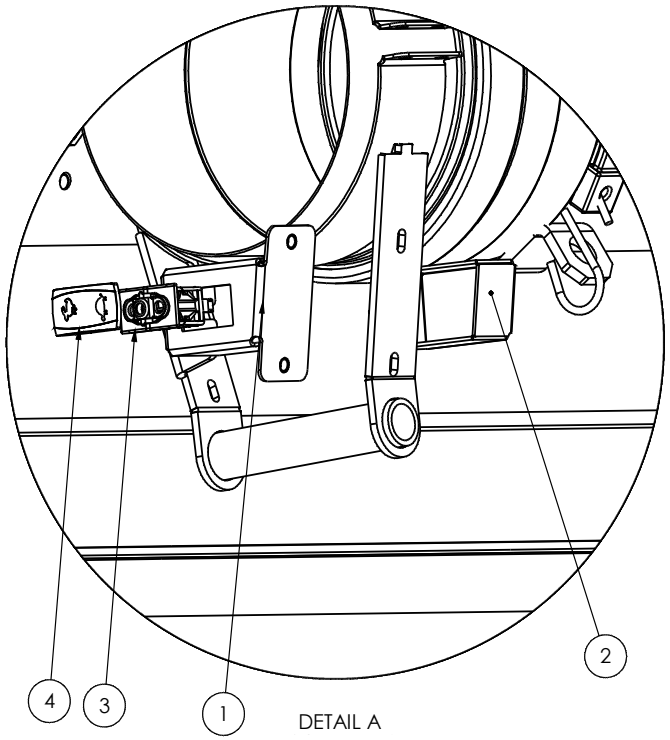

204P48 - HAND HOSE, STANDARD ELE BOOM

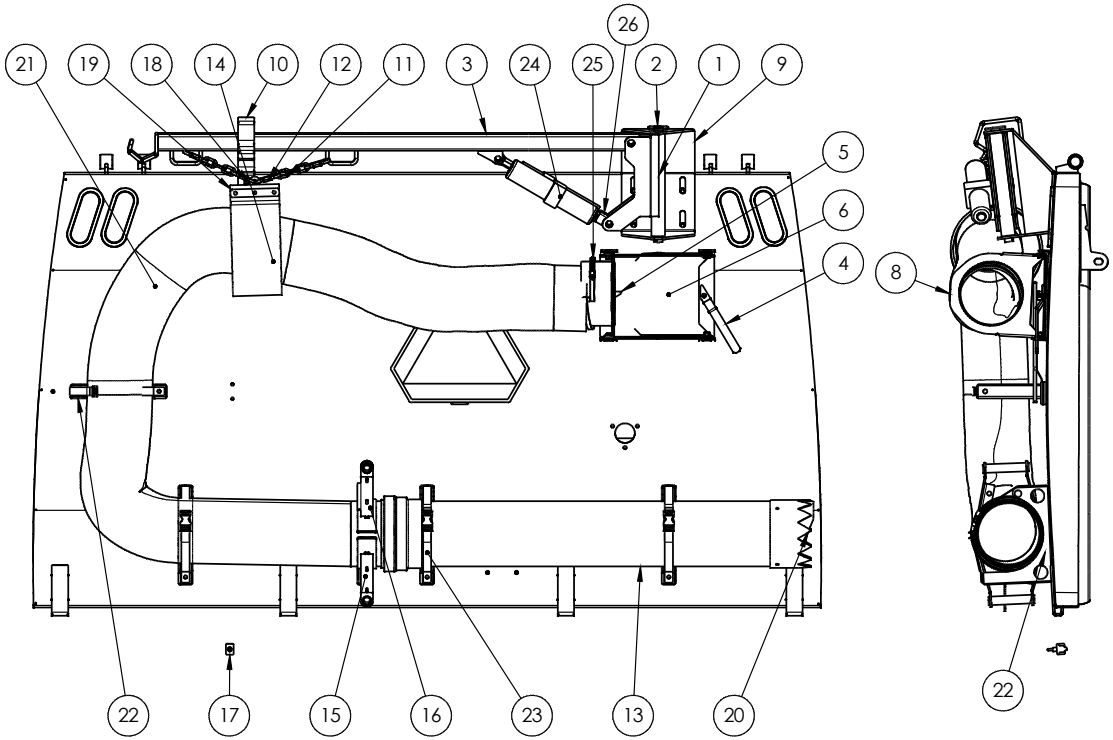

ITEM NO.	PART NUMBER	DESCRIPTION	QTY.
1	300836	WELD,PIVOT,BOOM,AHH,A7	1
2	525625	WELD, BOOM SWING PIN	1
3	520625	HAND HOSE POWER BOOM	1
4	5202634	HANDLE HH TRANS DOOR	1
5	5202633	HAND HOSE LATCH LEFT	1
6	520684	HAND HOSE COVER PLATE	1
7	523194	BLOCKOFF PLATE,W/HANDLE 2004 A7000	1
8	521079	HAND HOSE 8" TRANSITION PLATE	1
9	522926	BOOM BKT. ASSY	1
10	5214231	BOOM KEEPER, A9	1
11	20814-3	CHAIN,1/4" 3 LINKS	2
12	21924	ATTACH LINK	4
13	60024	AHH NOZ & STOB ASSY	1
14	65060	FLAP, HD HAND HOSE, A7	1
15	525161	WLD, FMLE HLF CLMP HNDLE, AHH	1
16	525160	WLD, MLE HLF CLMP HNDLE, AHH	1
17	23006	SWITCH, 6 TERM WATERPROOF	1
18	3004003	HOSE HANGER, H/H	1
19	3004603	HOSE HANGER, RETAINER, H/H	2
20	5215415	CROWN, AHH TUBE END	1
21	60181-12'	HAND HOSE KANAFLEX 8"	12FT
22	5222521	HANGER, HAND HOSE, A-SERIES	4
23	65977	STRAP, CINCH 20", BUCKLE	4
24	65723	ACTUATOR, ELEC. PWR BOOM	1
25	66756	DUCT CLAMP 8"	1
26	525871	WLD,SPACER,BOOM ACTUATOR	1

ITEMS BELOW NOT SHOWN

ITEM NO.	PART NUMBER	DESCRIPTION	QTY.
27	22184	SEAL MTL, 3/8 X 1-1/4 PER FT	2ft
28	66689	HARNESS, REM THROTTLE/E BOOM	1
29	64606	PLUG, 2 CONTACT, SIZE 12 DTM	1
30	64619	WEDGELOCK, 2 WAY RECEPTACLE, D	1

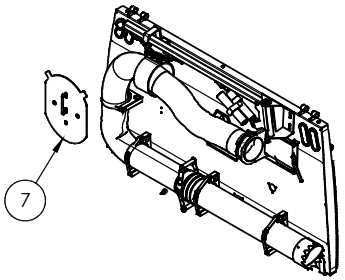

204P49 - HAND HOSE, HD ELE BOOM

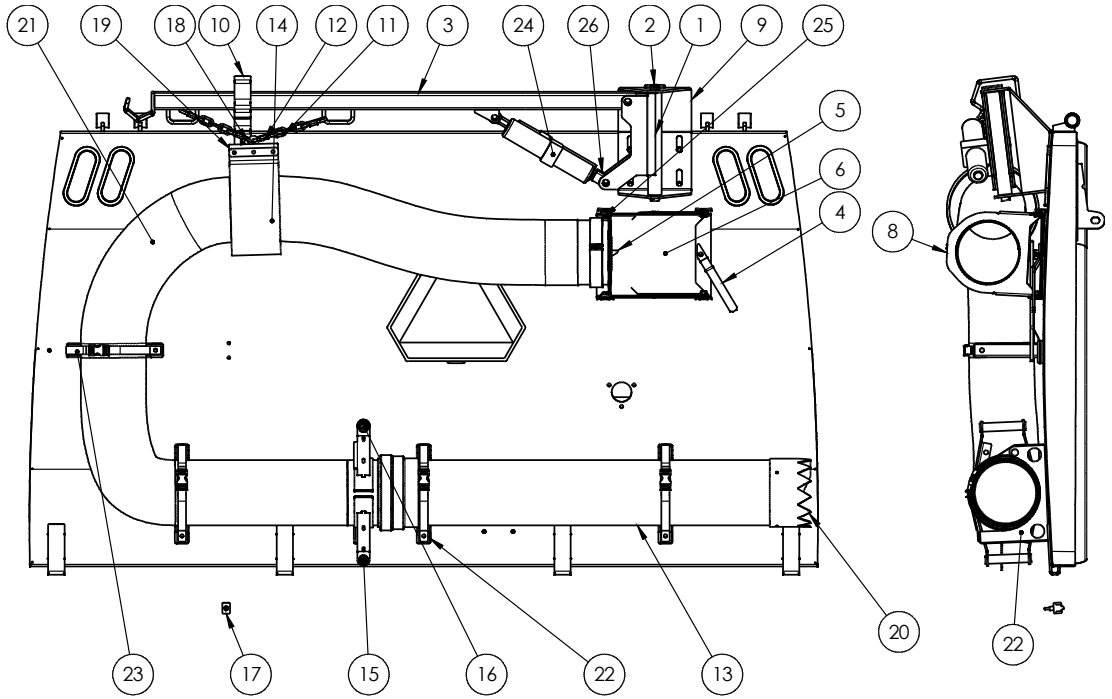

ITEM NO.	PART NUMBER	DESCRIPTION	QTY.
1	300836	WELD,PIVOT,BOOM,AHH,A7	1
2	525625	WELD, BOOM SWING PIN	1
3	520625	HAND HOSE POWER BOOM	1
4	5202634	HANDLE HH TRANS DOOR	1
5	5202633	HAND HOSE LATCH LEFT	1
6	520684	HAND HOSE COVER PLATE	1
7	523194	BLOCKOFF PLATE,W/HANDLE 2004 A7000	1
8	521079	HAND HOSE 8" TRANSITION PLATE	1
9	522926	BOOM BKT. ASSY	1
10	5214231	BOOM KEEPER, A9	1
11	20814-3	CHAIN,1/4" 3 LINKS	2
12	21924	ATTACH LINK	4
13	60024	AHH NOZ & STOB ASSY	1
14	65060	FLAP, HD HAND HOSE, A7	1
15	525161	WLD, FMLE HLF CLMP HNDLE, AHH	1
16	525160	WLD, MLE HLF CLMP HNDLE, AHH	1
17	23006	SWITCH, 6 TERM WATERPROOF	1
18	3004003	HOSE HANGER, H/H	1
19	3004603	HOSE HANGER, RETAINER, H/H	2
20	5215415	CROWN, AHH TUBE END	1
21	64787-12'	HAND HEAVY DUTY HOSE 8"	1
22	5222521	HANGER, HAND HOSE, A-SERIES	4
23	65977	STRAP, CINCH 20", BUCKLE	4
24	65723	ACTUATOR, ELEC. PWR BOOM	1
25	5224326	HOSE CLAMP, HAND, HALF, A8	2
26	525871	WLD,SPACER,BOOM ACTUATOR	1

ITEMS BELOW NOT SHOWN

ITEM NO.	PART NUMBER	DESCRIPTION	QTY.
27	22184	SEAL MTL, 3/8 X 1-1/4 PER FT	2FT
28	66689	HARNESS, REM THROTTLE/E BOOM	1
29	64606	PLUG, 2 CONTACT, SIZE 12 DTM	1
30	64619	WEDGELOCK, 2 WAY RECEPTACLE, D	1
31	65161	DECAL, POWER BOOM	1

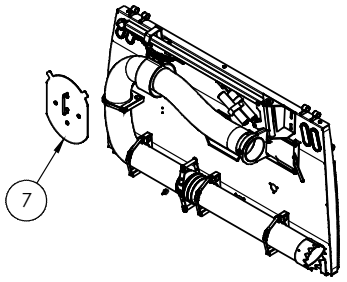

204H53 - HAND HOSE EXTENSION RACK SINGLE

ITEM NO.	QTY.	PART NUMBER	DESCRIPTION
1	1	525321	WELD,HAND HOSE EXT RACK, NYDOT
2	1	60019	AHH-48" NOZ-EXTN
3	2	29276	2" KNOB THREADED 3/8-16 X 1"
4	2	3004620	PLATE, HAND HOSE EXTENSION RA
5	1	300838	BRACE, EXTENSION RACK NYT
6	2	26307	STRAP, FUEL TANK

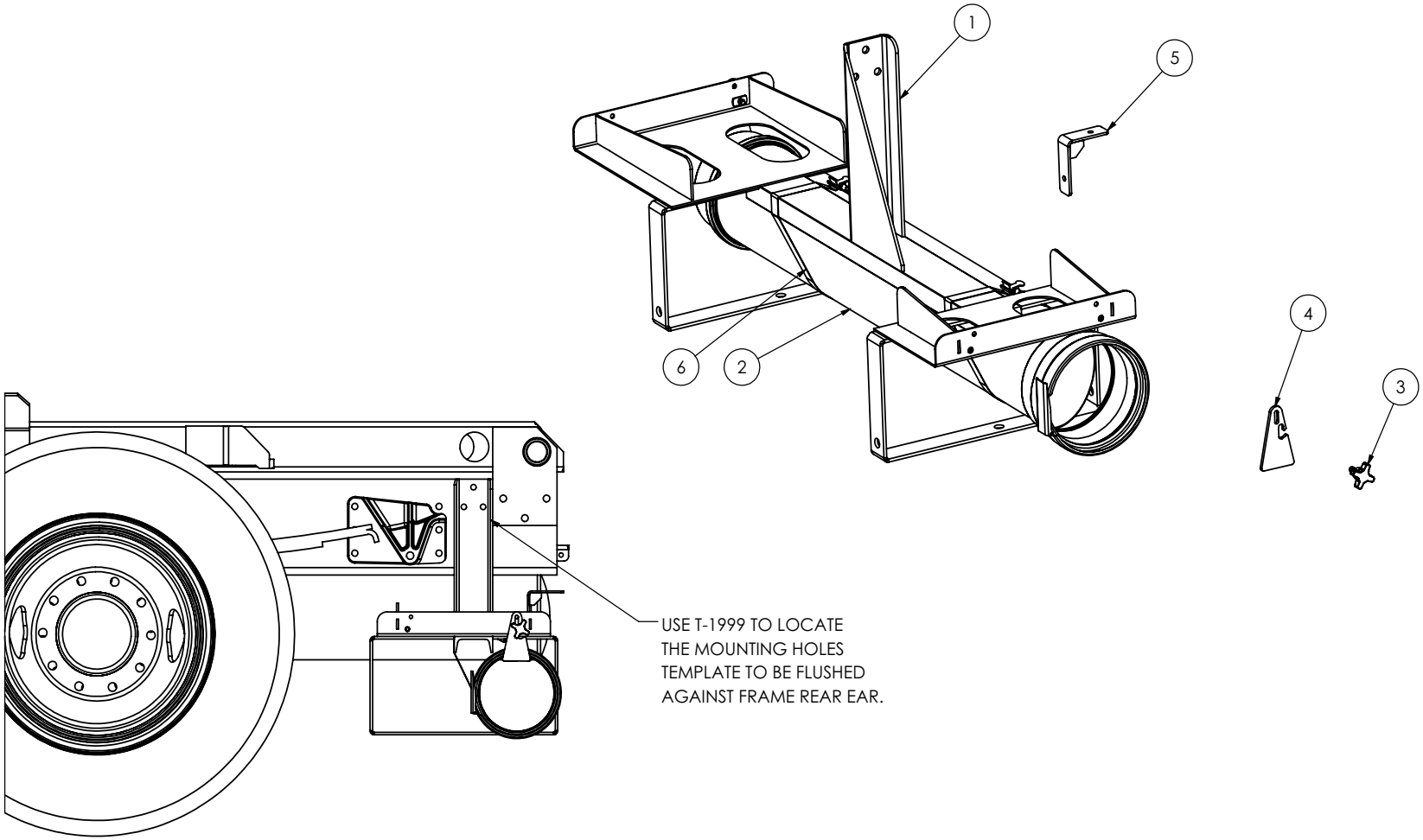

204N15 - HAND HOSE EXTENSION RACK

ITEM NO.	QTY.	PART NUMBER	DESCRIPTION
1	1	525321	WELD,HAND HOSE EXT RACK, NYDOT
2	2	60019	AHH-48" NOZ-EXTN
3	4	29276	2" KNOB THREADED 3/8-16 X 1"
4	4	3004620	PLATE, HAND HOSE EXTENSION RA
5	1	300838	BRACE, EXTENSION RACK NYT
6	2	26307	STRAP, FUEL TANK

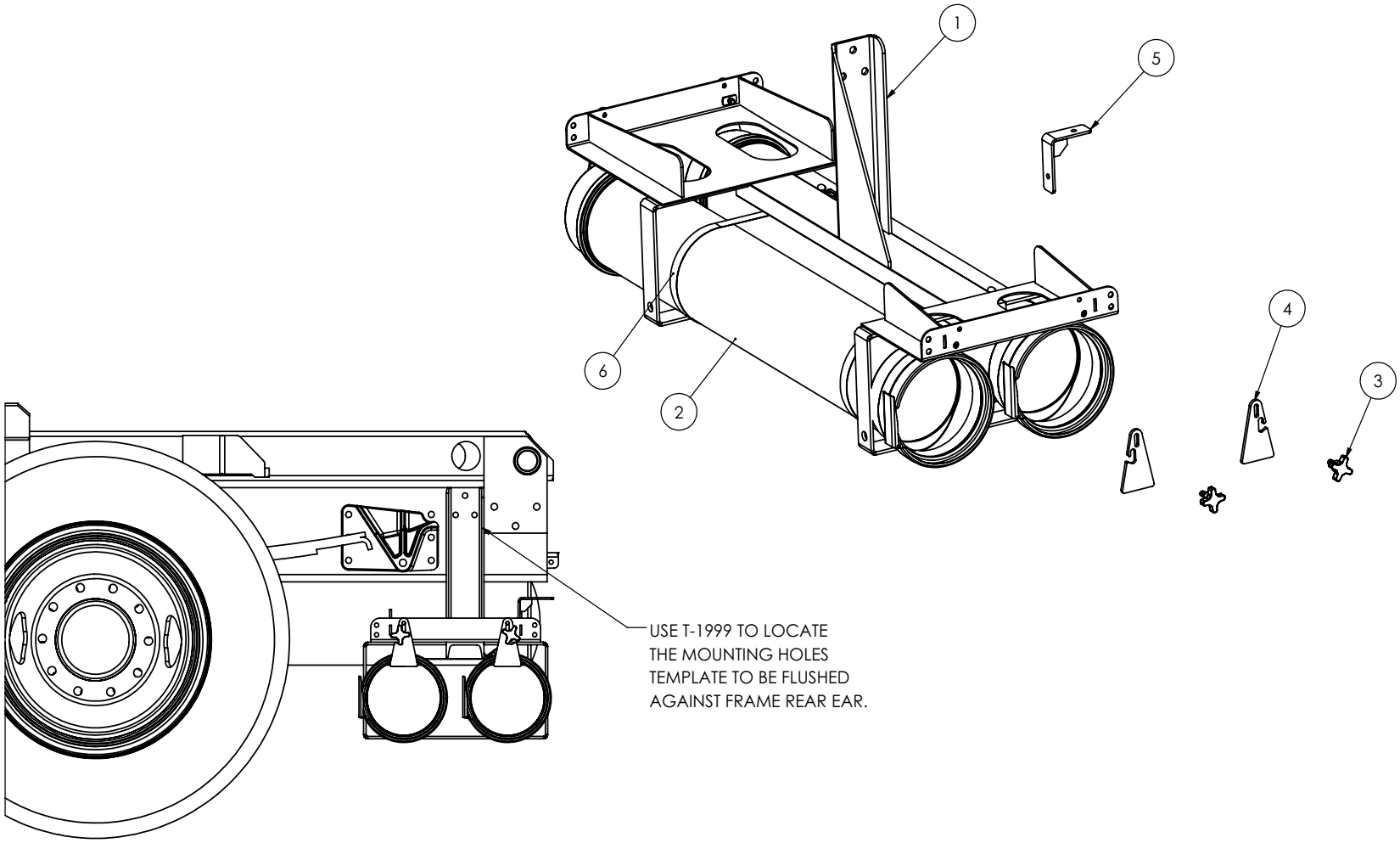

204R55 - HAND HOSE EXTENSION RACK 3X4

ITEM NO.	QTY.	PART NUMBER	DESCRIPTION
1	1	525574	WELD,HAND HOSE EXT RACK, NYDOT
2	3	60019	AHH-48" NOZ-EXTN
3	3	29276	2" KNOB THREADED 3/8-16 X 1"
4	3	3004620	PLATE, HAND HOSE EXTENSION RA
5	4	26307	STRAP, FUEL TANK

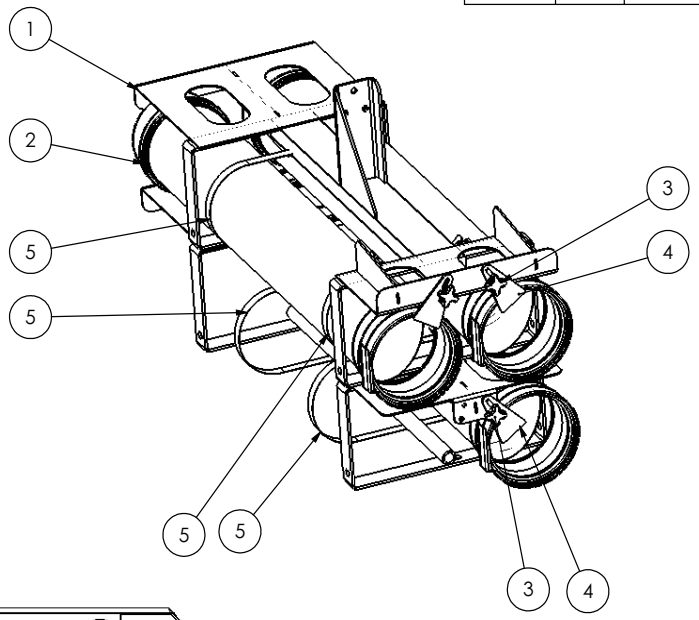

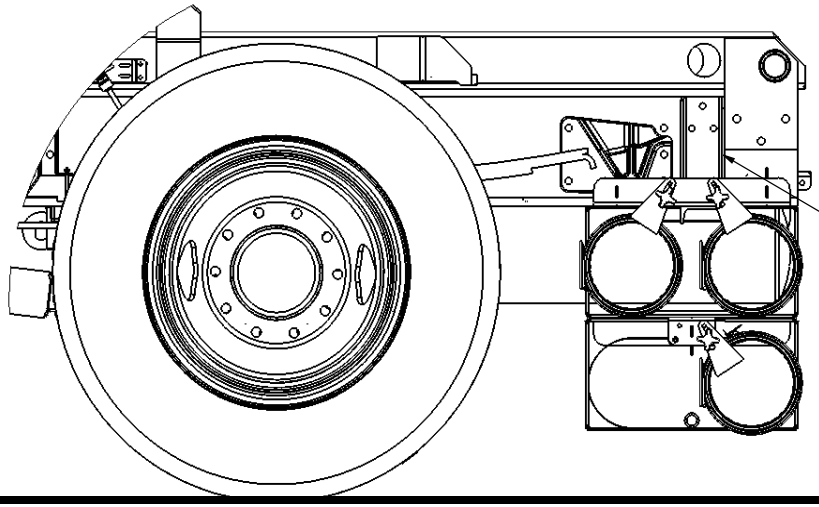

USE T-1999 TO LOCATE
THE MOUNTING HOLES
TEMPLATE TO BE FLUSHED
AGAINST FRAME REAR EAR.

204R52 - HAND HOSE EXTENSION RACK 4X4

ITEM NO.	QTY.	PART NUMBER	DESCRIPTION
1	1	525574	WELD,HAND HOSE EXT RACK, NYDOT
2	4	60019	AHH-48" NOZ-EXTN
3	4	29276	2" KNOB THREADED 3/8-16 X 1"
4	4	3004620	PLATE, HAND HOSE EXTENSION RA
5	4	26307	STRAP, FUEL TANK

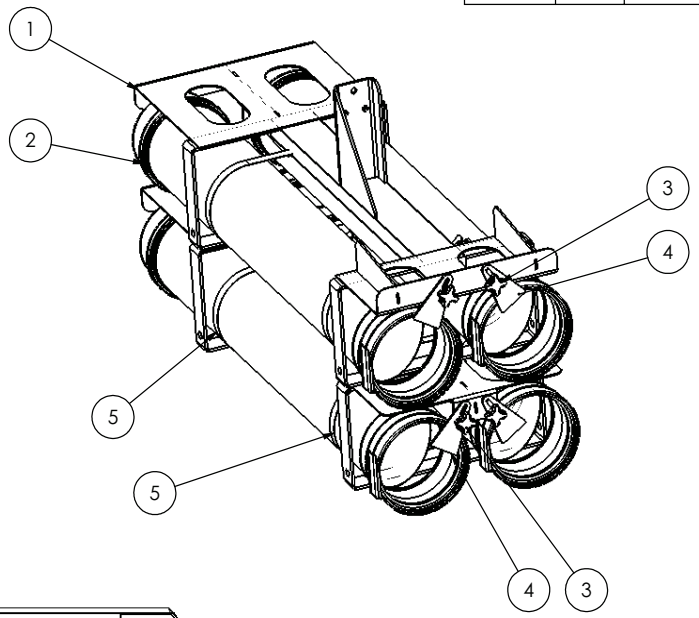

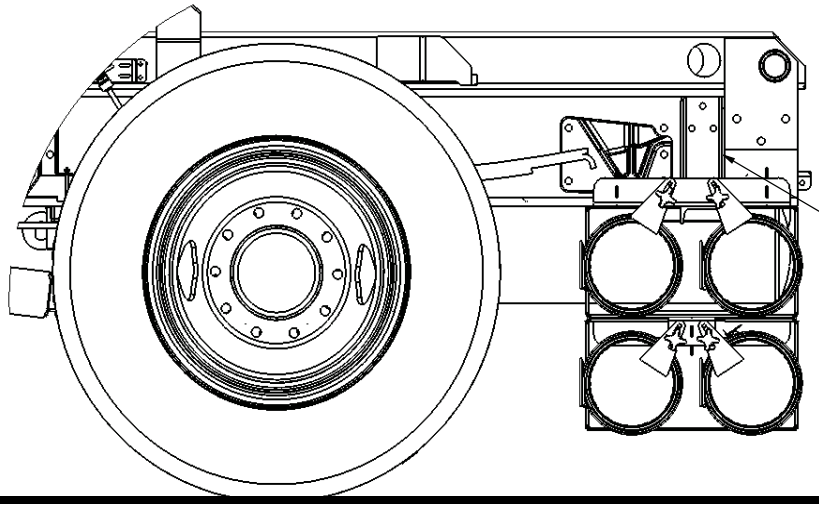

USE T-1999 TO LOCATE
THE MOUNTING HOLES
TEMPLATE TO BE FLUSHED
AGAINST FRAME REAR EAR.

204W49 - HAND HOSE EXTENSION, PACCAR

ITEM NO.	PART NUMBER	DESCRIPTION	QTY.
1	525857	WLD, HAND HOSE EXT, MNT SNGL	1
2	525858	WLD, HAND HOSE CLAMP CB	1
3	60019	AHH-48" NOZ-EXTN	1
4	28194	PIN, SAFTEY SNAP .38 X 1.5"	3
5	24075	LANYARD, 6"	3
6	3006358	HH EXT, LWR BMPR MNT, PB	2
7	300879	BRACKET LH, BAR MAG KENWORTH	1
8	300881	BRACKET RH, BAR MAG KENWORTH	1
9	525995	HH EXT, END CAP LH	1
10	525996	HH EXT, END CAP RH	1
11	23004	ROD, BRIGHT ORANGE	2

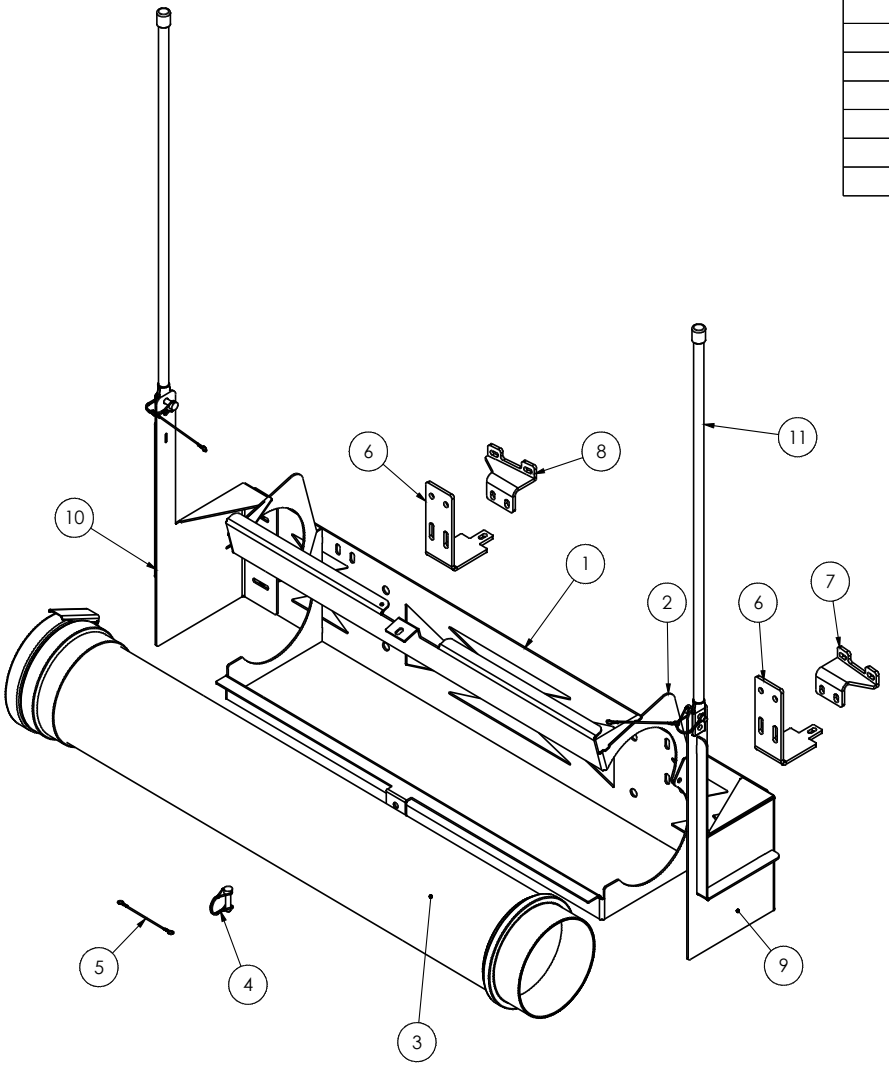

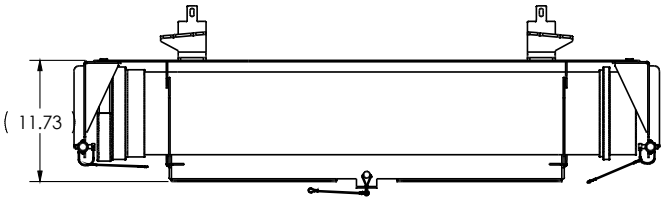

204X98 - DOUBLE, HAND HOSE EXT, PACCAR

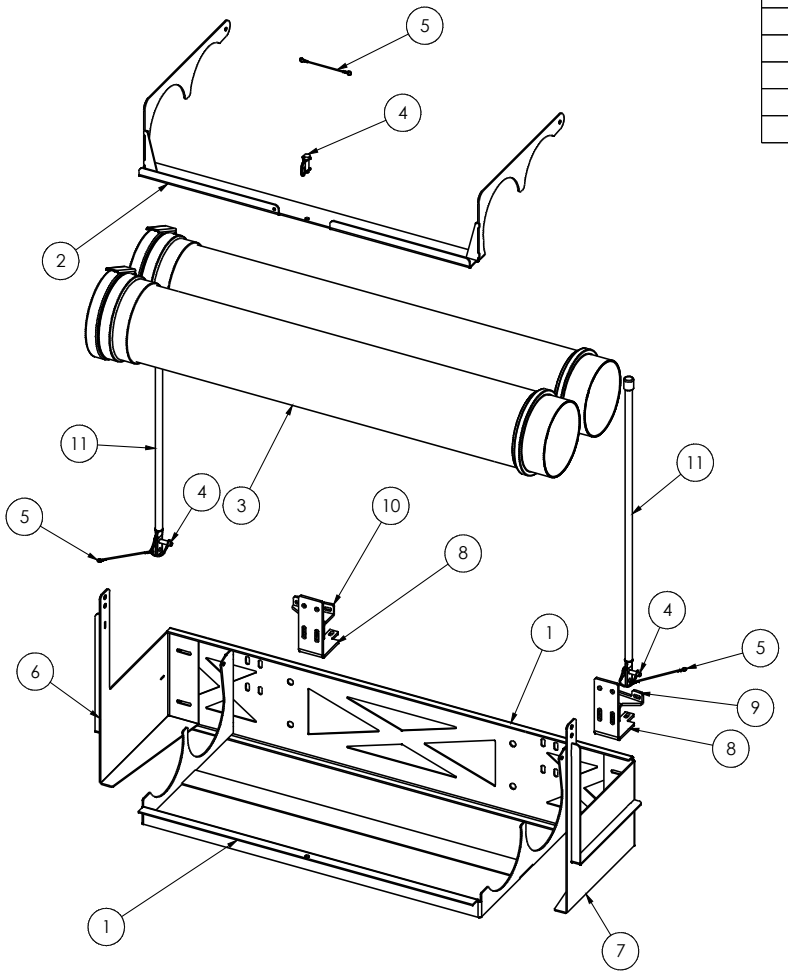

ITEM NO.	PART NUMBER	QTY.	DESCRIPTION
1	525960	1	WLD, HAND HOSE EXT, MNT SNGL
2	525961	1	WLD, DBLE HND HSE EXT, CLAMP
3	60019	2	AHH-48" NOZ-EXTN
4	28194	3	PIN, SAFTEY SNAP .38 X 1.5"
5	24075	3	LANYARD, 6"
6	525999	1	HH EXT, DBL END CAP RH
7	525998	1	HH EXT, END CAP LH, DBL
8	3006358	2	HH EXT, LWR BMPR MNT, PB
9	300879	1	BRACKET LH, BAR MAG KENWORTH
10	300881	1	BRACKET RH, BAR MAG KENWORTH
11	23004	2	ROD, BRIGHT ORANGE

204U89 - HAND HOSE EXTENSION

ITEM NO.	PART NUMBER	DESCRIPTION	QTY.
1	5218146	BRACKET LH UP MAGNET JIPCO	1
2	5218147	BRACKET RH UP MAGNET JIPCO	1
3	5218139	ANCHOR,BKT,RH,REM-MAG,M2	1
4	5218140	ANCHOR,BKT,LH,REM-MAG,M2	1
5	525857	WLD, HAND HOSE EXT, MNT SNGL	1
6	525858	WLD, HAND HOSE CLAMP CB	1
7	60019	AHH-48" NOZ-EXTN	1
8	28194	PIN, SAFTEY SNAP .38 X 1.5"	1
9	24075	LANYARD, 6"	1
10	525996	HH EXT, END CAP RH	1
11	525995	HH EXT, END CAP LH	1

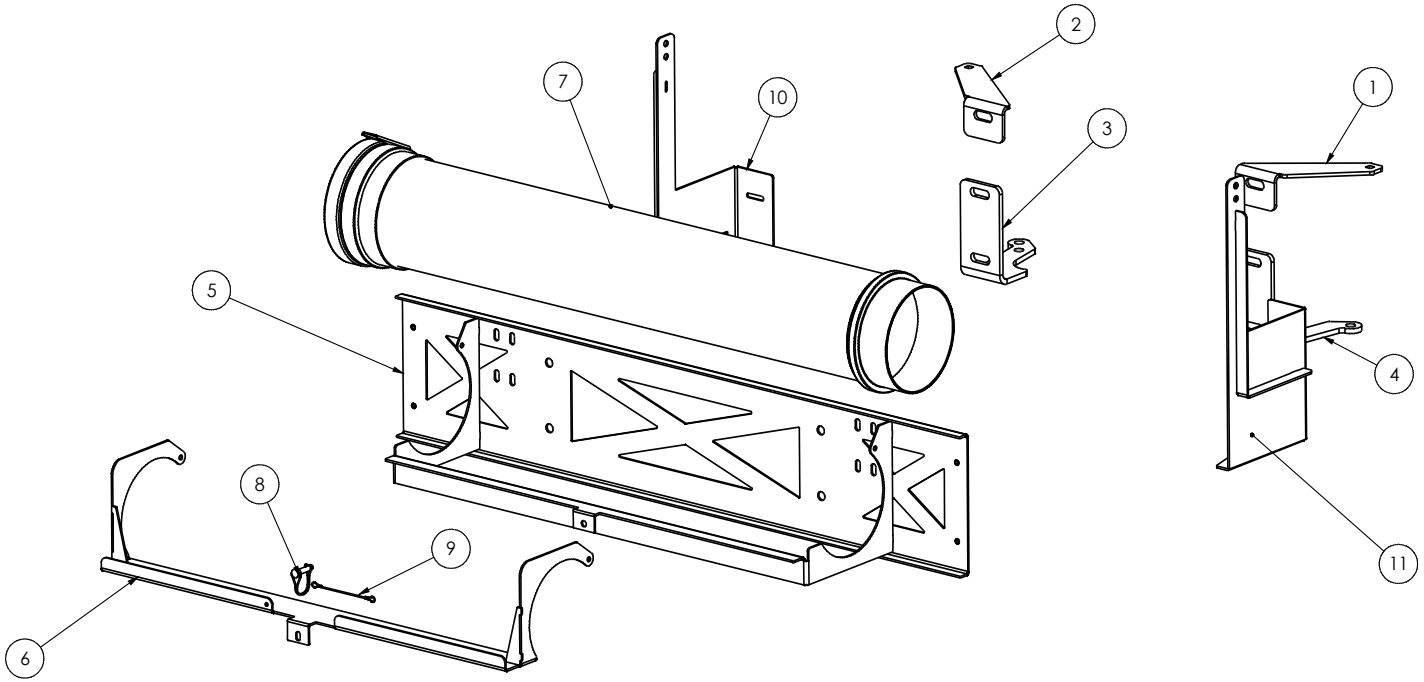

204V68 - DOUBLE, HAND HOSE EXT

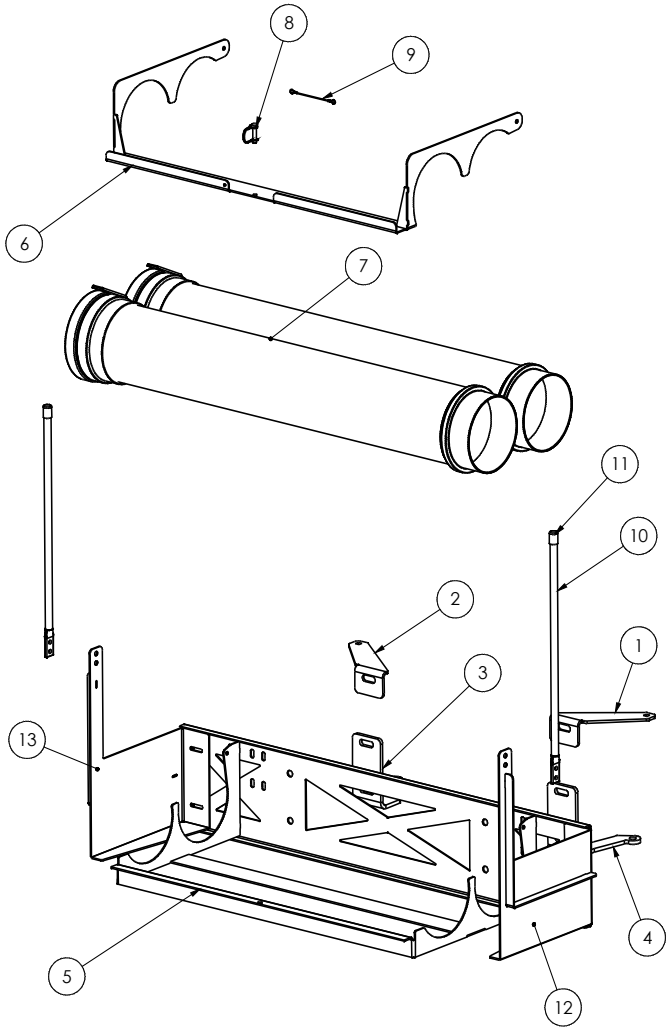

ITEM NO.	PART NUMBER	DESCRIPTION	QTY.
1	5218146	BRACKET LH UP MAGNET JIPCO	1
2	5218147	BRACKET RH UP MAGNET JIPCO	1
3	5218139	ANCHOR,BKT,RH,REM-MAG,M2	1
4	5218140	ANCHOR,BKT,LH,REM-MAG,M2	1
5	525960	WLD, HAND HOSE EXT, MNT SNGL	1
6	525961	WLD, DBLE HND HSE EXT, CLAMP	1
7	60019	AHH-48" NOZ-EXTN	2
8	28194	PIN, SAFTEY SNAP .38 X 1.5"	1
9	24075	LANYARD, 6"	1
10	6503601	SIGNAL ROD, BRIGHT ORANGE 25"L	2
11	66675	FLEX VINYL CAP, 1" INSIDE HT,	2
12	525998	HH EXT, END CAP LH, DBL	1
13	525999	HH EXT, DBL END CAP RH	1

204K35 - HAND HOSE WATER WITH HOPPER SPRAY

ITEM NO.	QTY.	PART NUMBER	DESCRIPTION
1	3	20070	3/8 HOSE X 1/4 MALE PIPE HOSE
2	1	28980	NOZZLE, BRASS .25-18NPT X .067
3	1	20144	TEE,1/4 NPT,MALE BRANCH,BRASS
4	2	20133	ELBOW,90,1/4 MNPT X FNPT
5	3	26973	1/4" MINI BALL VALVE
6	1	23005	SWITCH, SPST WATERPROOF
7	1	20122	RUBBER SWITCH BOOT
8	1	5221400	HAND HOSE SPRAY NOZZLE BRACKE
9	1	24087	ELBOW, 90 DEG., 1/4 FPT X 1/4 FPT
10	50 FT	26632	HOSE, 3/8" PUSHLOK
11	1	26632	HOSE, 3/8" 250PSI PSHLK PER IN

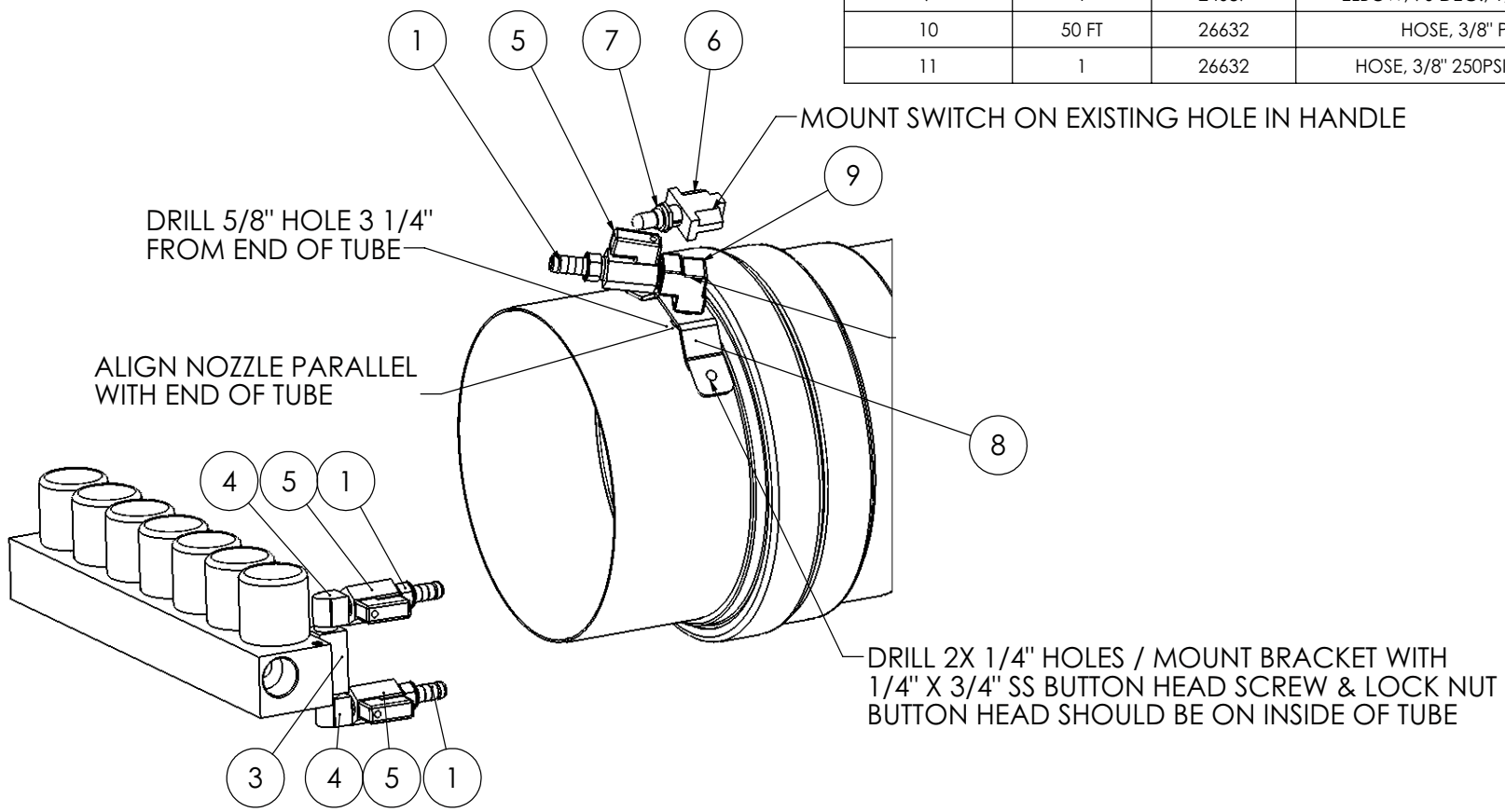

204K97 - HAND HOSE WATER W/O HOPPER SPRAY

ITEM NO.	PART NUMBER	QTY.	DESCRIPTION
1	20070	2	3/8 HOSE X 1/4 MALE PIPE HOSE
2	28980	1	NOZZLE, BRASS .25-18NPT X .067
3	23005	1	SWITCH, SPST WATERPROOF
4	20122	1	RUBBER SWITCH BOOT
5	5221400	1	HAND HOSE SPRAY NOZZLE BRACKE
6	24087	1	ELBOW, 90 DEG., 1/4 FPT X 1/4 FPT
7	26632	50 FT	HOSE, 3/8" PUSHLOK
8	26973	1	1/4" MINI BALL VALVE

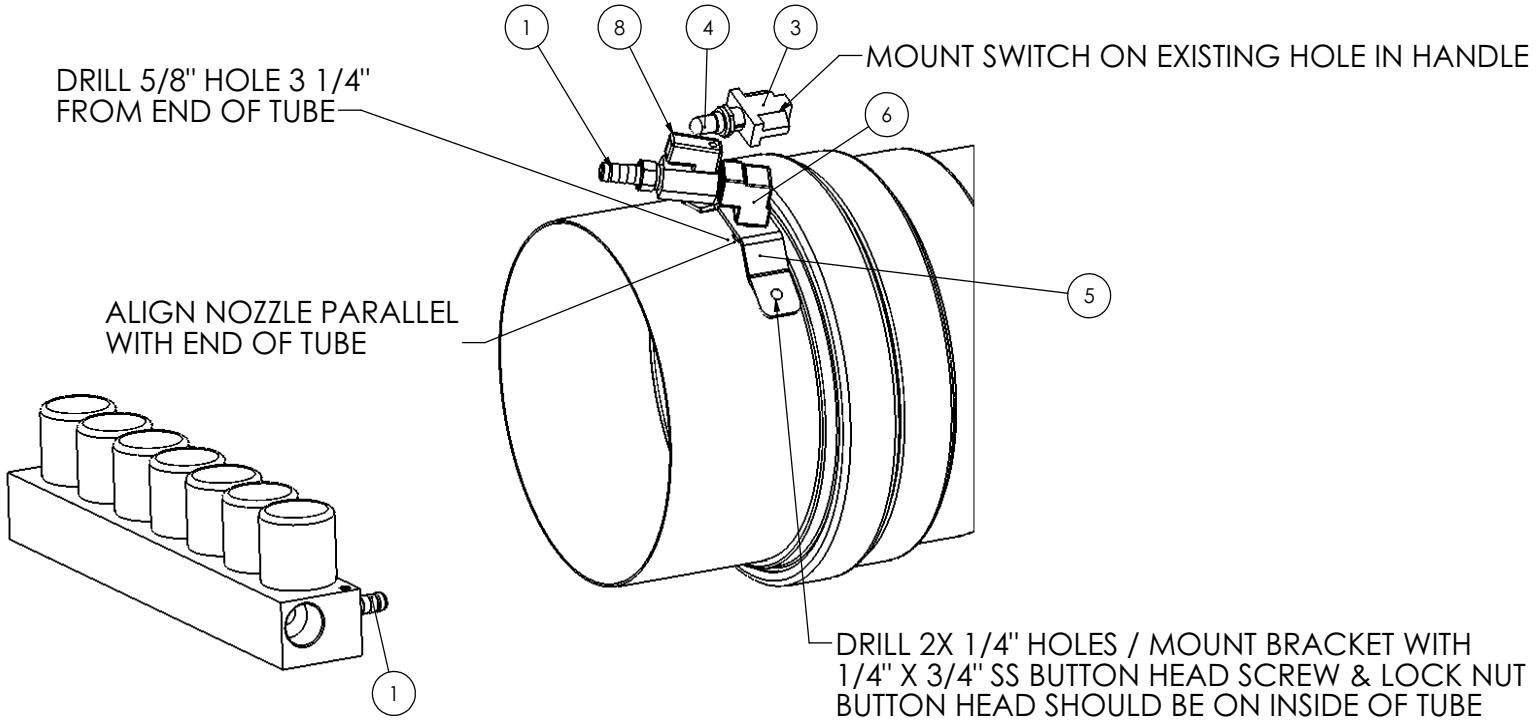

300279 - REMOVABLE PRESSURE TRANSITION

ITEM NO.	PART NUMBER	QTY.	DESCRIPTION
1	3001301	1	RING, TRANS, REMOVABLE
2	5207765	1	TRANSITION, PRESSURE
3	5200321	1	DEFLECTOR, AIR, STD SW HD. A7
4	5200322	1	DEFLECTOR, FRONT, AIR, A7
5	5200365	1	DEFLECTOR, REAR, STD. HEAD, A7
6	5213556	1	FLANGE, RING, TRANS, HEAD

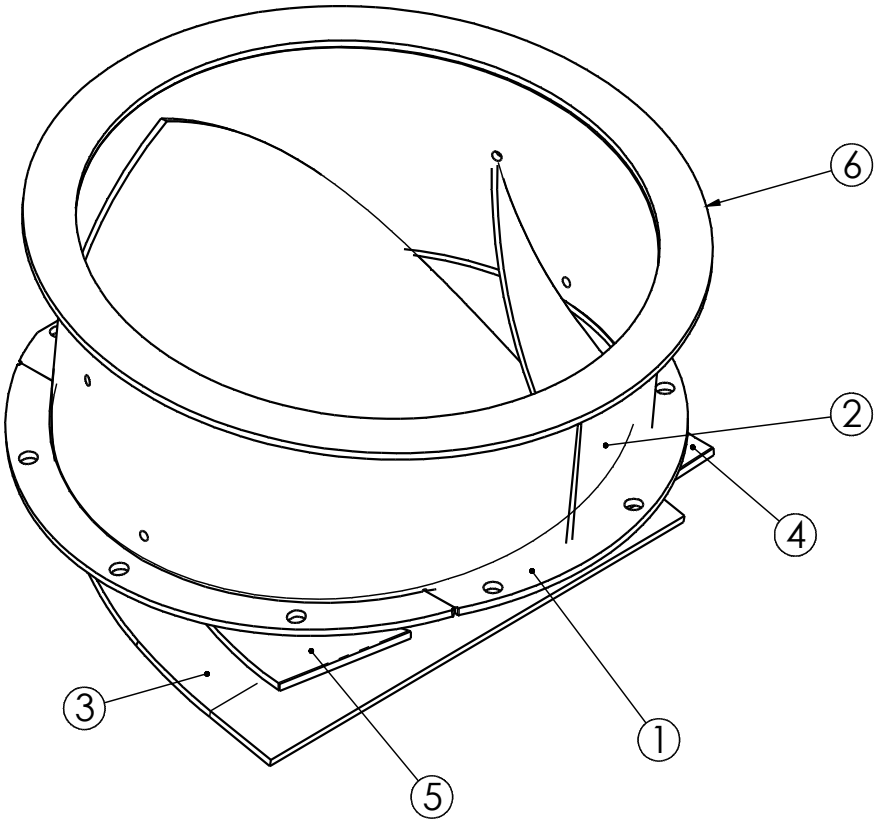

204P45 - HEAD STANDARD WITH REM. TUBES

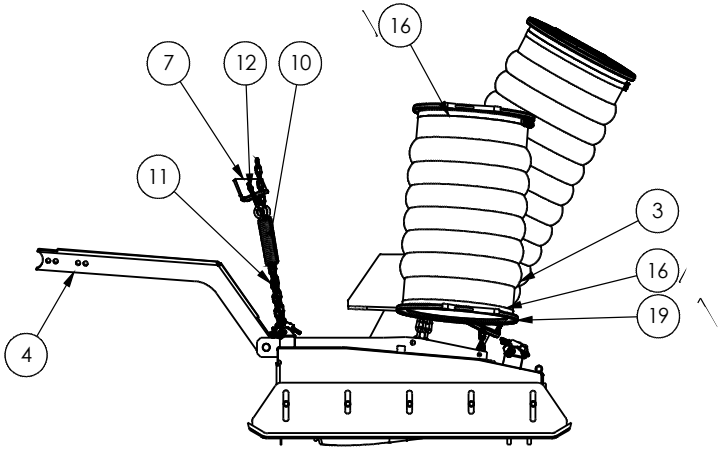

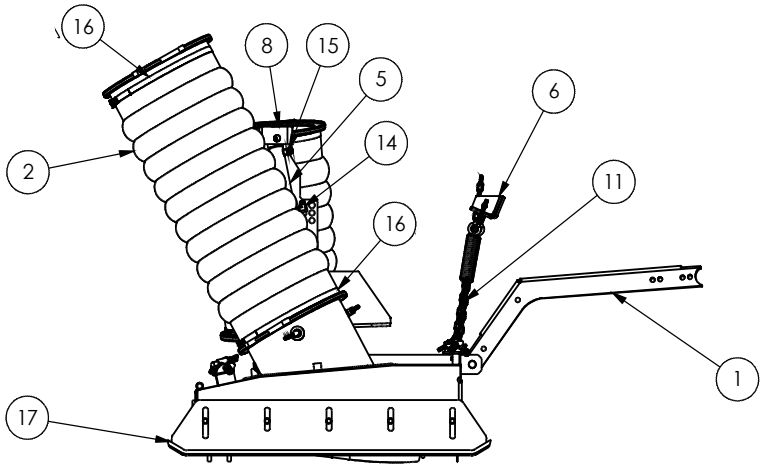

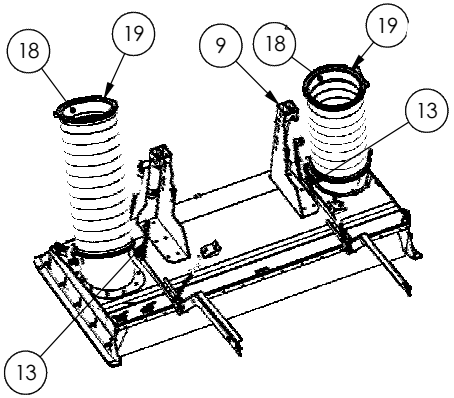

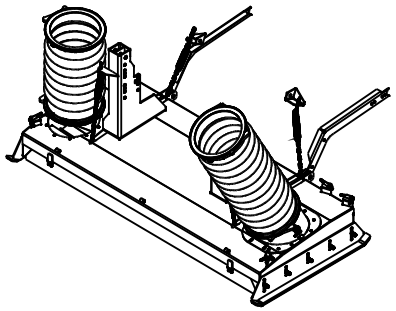

ITEM NO.	PART NUMBER	DESCRIPTION	QTY.
1	522891	BENT SECTION, RH	1
2	21049	HOSE, 14" DIA. X 38", 3" CUFF	1
3	21048	HOSE, 14" DIA. X 26", 3" CUFF	1
4	522892	BENT SECTION, LH	1
5	20928	HYD CYL, 1.5 X 6	2
6	5204932	LH SPRING BRACKET	1
7	5204931	RH SPRING BRACKET	1
8	524779	HEADSTOP, RH, A-SERIES, STD	1
9	524778	HEADSTOP, LH, A-SERIES, STD	1
10	22940	SPRING, 1/4 X 1-1/2 X 8"	4
11	20815	3/16" CHAIN 26 LINKS	4
12	32098	3/8" X 3 EYE BOLT	4
13	20816	CHAIN, 5/16" , 16-1/4" LONG	2
14	65765	ELBOW, 90° 3/8 MORFS X 1/4 NPT	2
15	65632	ADAPTER, 3/8 MORFS X 1/4 NPT	2
16	66521	14-3/4" T-BOLT CLAMP	4
17	204P35	ASM,HEAD, RMVBLE TUBES, A7/A9	1
18	522804	QUICK DISCONNECT, UPPER SECT	3
19	28445	CLAMP, V16-1/8	3

ITEMS BELOW NOT SHOWN

ITEM NO.	PART NUMBER	DESCRIPTION	QTY.
20	65698	PUMP, DOUBLE CASAPPA 1.03 CC	1
21	61052	ELBOW, 90 1" MORFS X 1" MORB	1
22	29342	FLAP, STD HEAD UPSTOP	1
23	204L10	KIT, HOSE STANDARD HEAD A7 & A9	1
24	61047	ELBOW,90 1/2 MORFS X 5/8 MORB	2

204P35 - STANDARD HEAD WITH REM. TUBES

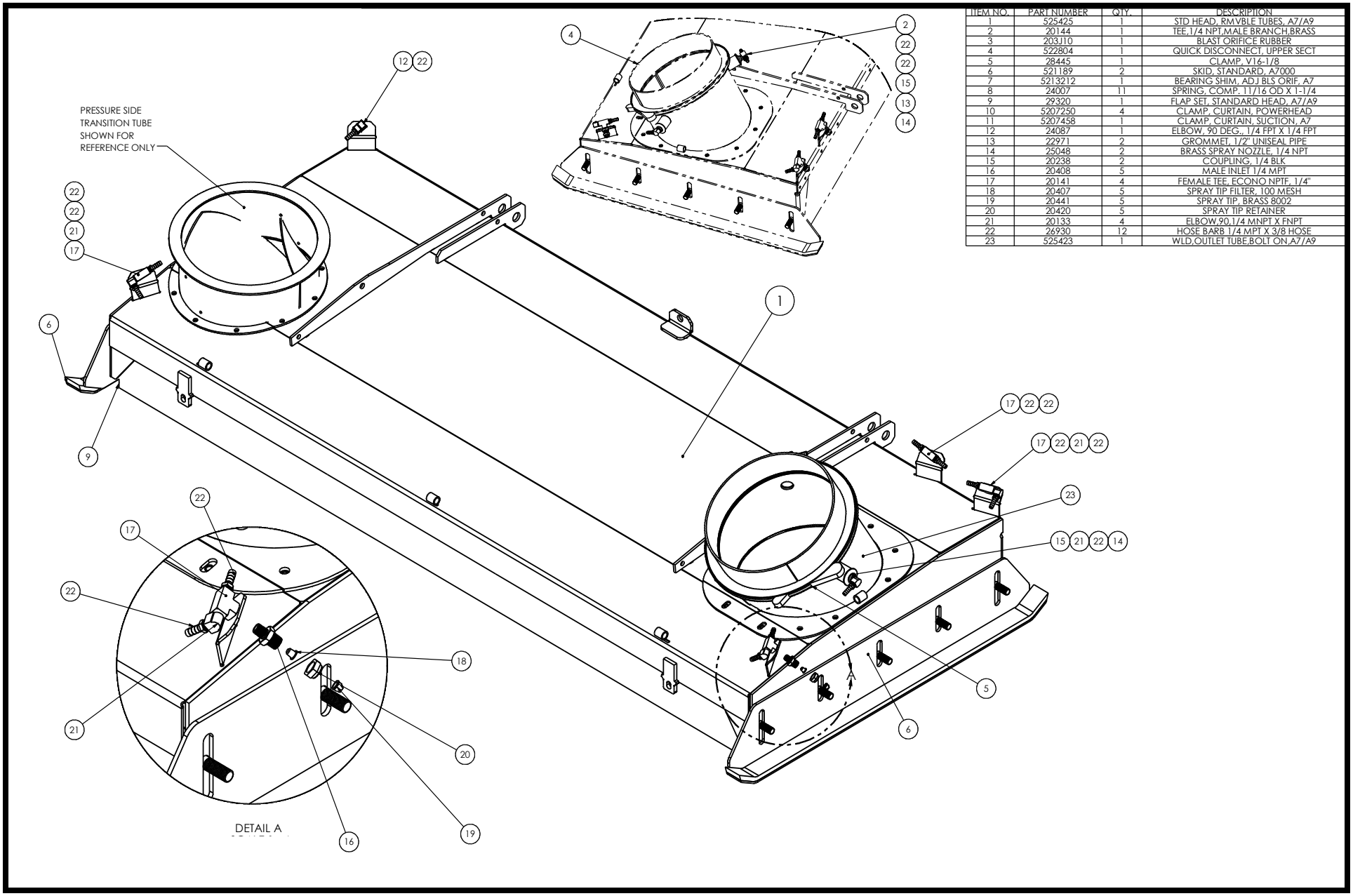

ITEM NO.	PART NUMBER	QTY.	DESCRIPTION
1	525425	1	STD HEAD, RMVBLE TUBES, A7/A9
2	20144	1	TEE,1/4 NPT,MALE BRANCH,BRASS
3	203J10	1	BLAST ORIFICE RUBBER
4	522804	1	QUICK DISCONNECT, UPPER SECT
5	28445	1	CLAMP, V16-1/8
6	521189	2	SKID, STANDARD, A7000
7	5213212	1	BEARING SHIM, ADJ BLS ORIF, A7
8	24007	11	SPRING, COMP. 11/16 OD X 1-1/4
9	29320	1	FLAP SET, STANDARD HEAD, A7/A9
10	5207250	4	CLAMP, CURTAIN, POWERHEAD
11	5207458	1	CLAMP, CURTAIN, SUCTION, A7
12	24087	1	ELBOW, 90 DEG., 1/4 FPT X 1/4 FPT
13	22971	2	GROMMET, 1/2" UNISEAL PIPE
14	25048	2	BRASS SPRAY NOZZLE, 1/4 NPT
15	20238	2	COUPLING, 1/4 BLK
16	20408	5	MALE INLET 1/4 MPT
17	20141	4	FEMALE TEE, ECONO NPTF, 1/4"
18	20407	5	SPRAY TIP FILTER, 100 MESH
19	20441	5	SPRAY TIP, BRASS 8002
20	20420	5	SPRAY TIP RETAINER
21	20133	4	ELBOW,90,1/4 MNPT X FNPT
22	26930	12	HOSE BARB 1/4 MPT X 3/8 HOSE
23	525423	1	WLD,OUTLET TUBE,BOLT ON,A7/A9

204P35 - STANDARD HEAD WITH REM. TUBES

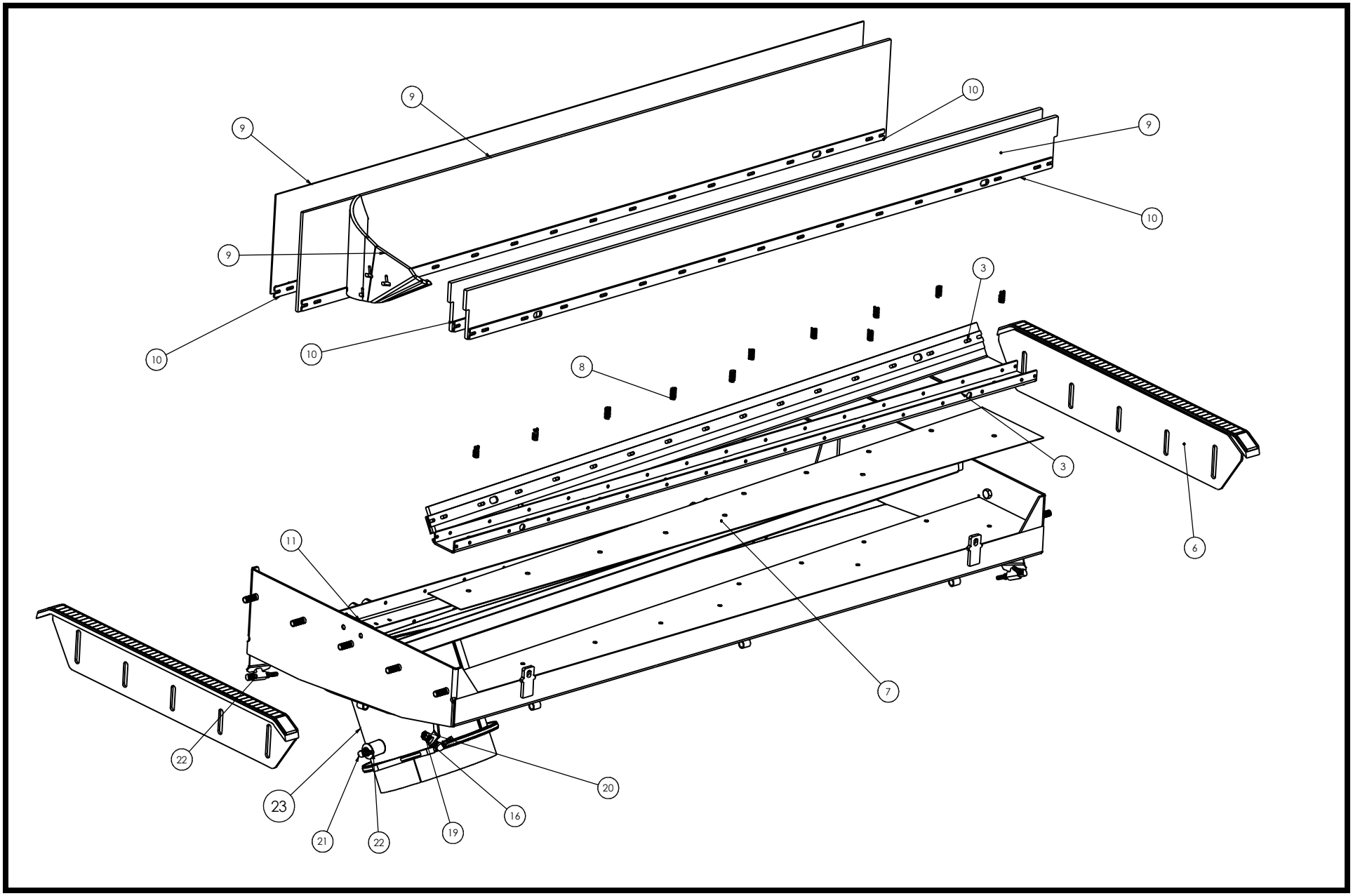

203J10 - BLAST ORIFICE RUBBER

ITEM NO.	PART NUMBER	Default/QTY.	DESCRIPTION
1	5207250	1	CLAMP, CURTAIN, POWERHEAD
2	5215512	1	FLAP, BLAST ORIFICE
3	523064	1	SWEEPING HEAD ADJUSTABLE ORFICE

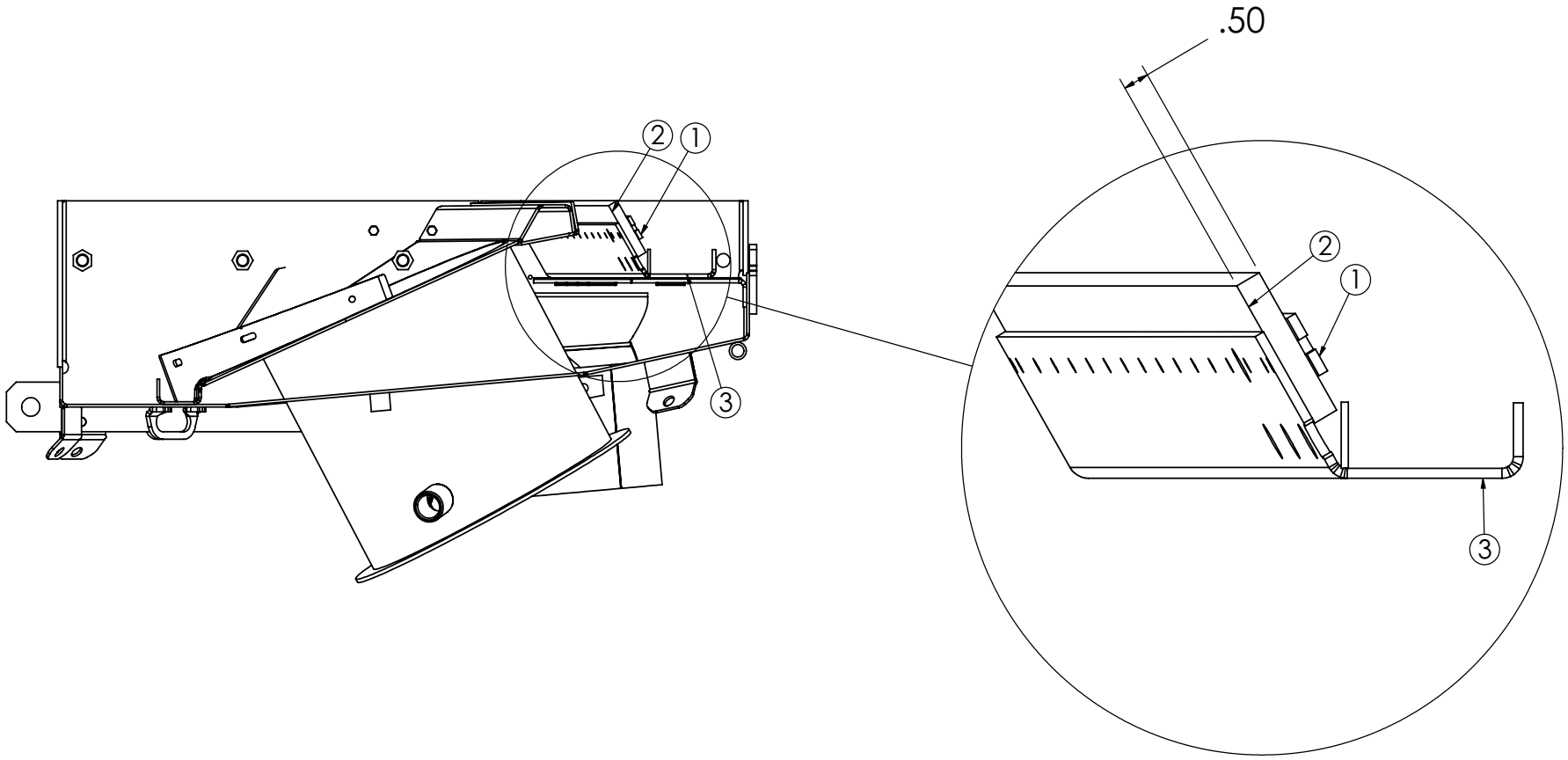

DETAIL B

204T20 - SWEEPING HEAD WITH 3-STAGE PUMP MOUNT

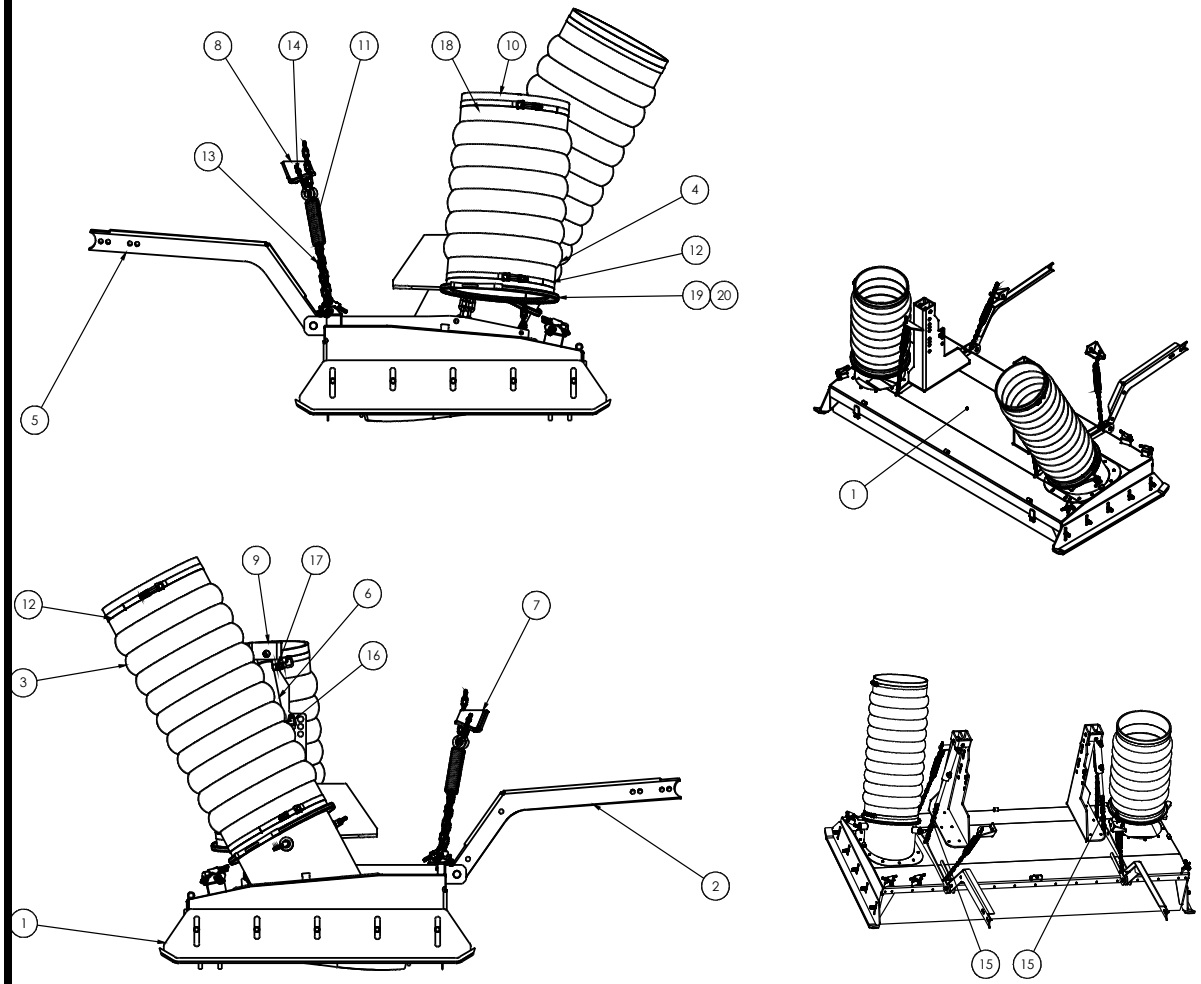

ITEM NO.	PART NUMBER	DESCRIPTION	QTY.
1	204P35	ASM,HEAD, RMVBLE TUBES, A7/A9	1
2	522891	BENT SECTION, RH	1
3	21049	HOSE, 14" DIA. X 38", 3" CUFF	1
4	21048	HOSE, 14" DIA. X 26", 3" CUFF	1
5	522892	BENT SECTION, LH	1
6	20928	HYD CYL, 1.5 X 6	2
7	5204932	LH SPRING BRACKET	1
8	5204931	RH SPRING BRACKET	1
9	524779	HEADSTOP, RH, A-SERIES, STD	1
10	524778	HEADSTOP, LH, A-SERIES, STD	1
11	22940	SPRING, 1/4 X 1-1/2 X 8"	4
12	66521	14-3/4" T-BOLT CLAMP	4
13	20815	3/16" CHAIN 26 LINKS	4
14	32098	3/8" X 3 EYE BOLT	4
15	20816	CHAIN, 5/16" , 16-1/4" LONG	2
16	65765	ELBOW, 90° 3/8 MORFS X 1/4 NPT	2
17	65632	ADAPTER, 3/8 MORFS X 1/4 NPT	2
18	61042	ELBOW,90 3/8 FORFS X 3/8 MORFS	2
19	28445	CLAMP, V16-1/8	1
20	522804	QUICK DISCONNECT, UPPER SECT	1

ITEMS BELOW NOT SHOWN

ITEM NO.	PART NUMBER	DESCRIPTION	QTY.
21	204L10	KIT, HOSE STANDARD HEAD A7 & A9	1
22	61052	ELBOW, 90 1" MORFS X 1" MORB	1
23	29342	FLAP, STD HEAD UPSTOP	1
24	67297	GEAR PUMP, CASAPPA, 3 STAGE	1
25	22040	DO3 VALVE, 4WE6G6X/EG12N9K4	1
26	22958	SINGLE STAGE MANIFOLD W\RELIEF	1
27	61047	ELBOW,90 1/2 MORFS X 5/8 MORB	2
28	22226	PLUG, 5/8 SAE HEX HEAD	3
29	23981	#4 SAE HEX HEAD PLUG	1
30	24111	PLUG, 1/2" SAE HOLLOW HEX	2

204P87 - PRESSRE TUBE, BOLT-ON, SPRAY

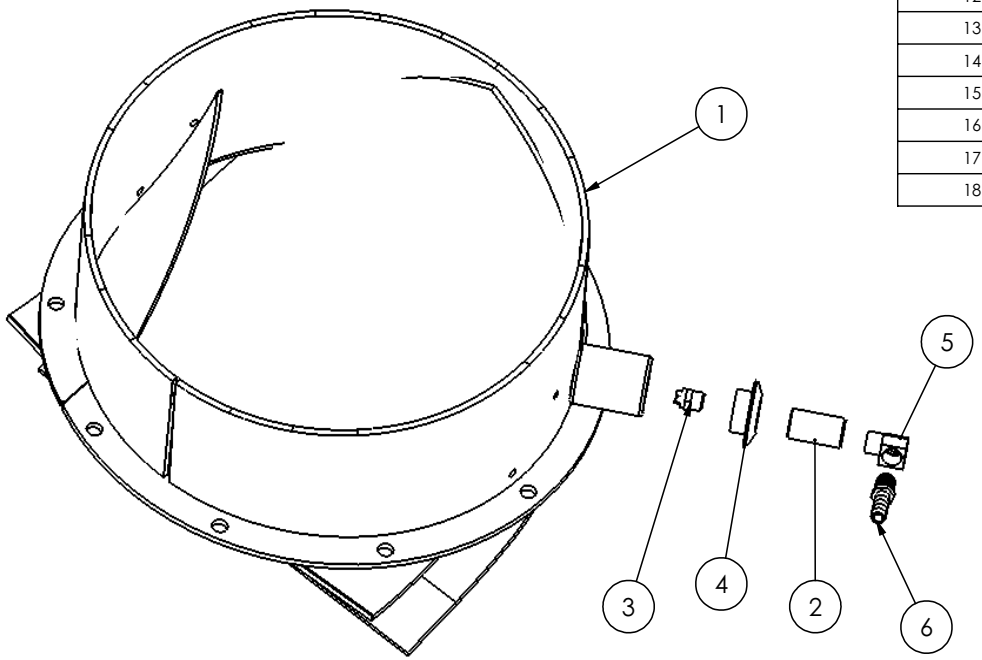

ITEM NO.	PART NUMBER	DESCRIPTION	QTY.
1	525456	BOLT-ON PRSSRE TRANS W/SPRAY	1
2	20238	COUPLING .75 SCH80	1
3	64526	NOZZLE, 1.5 GPM, 1/4 NPT	1
4	22971	GROMMET, 1/2" UNISEAL PIPE	1
5	20133	ELBOW,90,1/4 MNPT X FNPT	1
6	26930	HOSE BARB 1/4 MPT X 3/8 HOSE	2

ITEMS NOT SHOWN

ITEM NO.	PART NUMBER	DESCRIPTION	QTY.
7	26632	HOSE, 3/8" 250PSI PSHLK PER IN	18'
8	64595	DEUTSCH 2 POS FEMALE HOUSING	1
9	64610	DEUTSCH WEDGELOCK FEMALE HOUSING	1
10	61544	DEUTSCH 2 POS MALE HOUSING	4
11	64611	DEUTSCH WEDGELOCK MALE HOUSING	4
12	62609	SWITCH, CONTURA II, OFF/ON	1
13	62725	SWITCH, ACUATOR, WATER BLAST	1
14	22945	RELAY, SPDT W/ MOUNTING BRKT	1
15	22946	CONNECTOR HOUSING, RELAY BASE	1
16	66603	DIODE, DEUTSCH DT04-2P-RT01	3
17	64606	PLUG, 2CONTACT, SIZE 12 DTP	1
18	64619	DUETSCH WEDGELOCK FEMALE HOUSING	1

204S00 - HEAD, SIDE BLAST

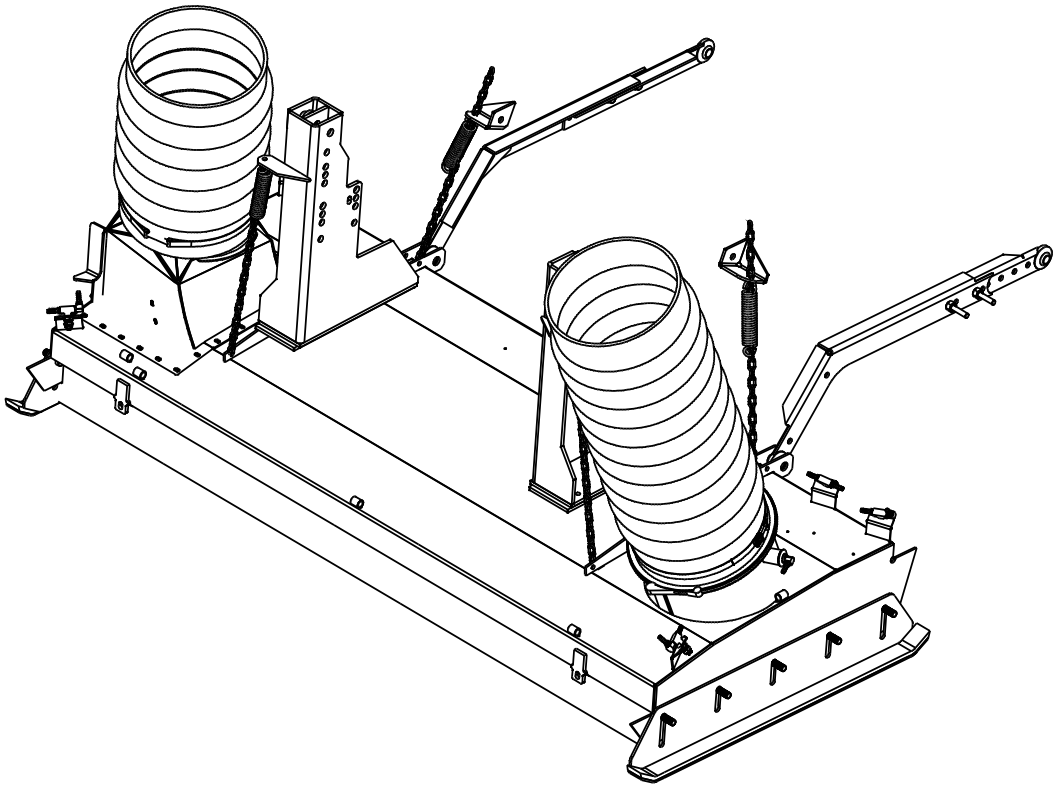

ITEMS NOT SHOWN

ITEM NO.	PART NUMBER	QTY.	DESCRIPTION
41	65698	1	PUMP, DOUBLE CASAPPA 1.03 CC
42	29986	1	ACTUATOR, 4" K2-G20-12B-BR-04R
43	21571	1	VALVE, 1/4" FLOW CONTROL
44	203931	1	KIT, HEAD WATER INTAKE SYS
45	523181	1	WELD, KEDGE
46	204L10	1	KIT, HOSE STANDARD HEAD A7&A8

ITEM NO.	PART NUMBER	QTY.	DESCRIPTION
1	523178	1	HEAD,WELD,BLASTER TRANSITION
2	523179	1	WELD, SIDE BLASTER, BOLT-ON
3	28445	1	CLAMP, V16-1/8
4	20133	5	ELBOW,90,1/4 MNPT X FNPT
5	20238	2	COUPLING .75 SCH80
6	22971	2	GROMMET, 1/2" UNISEAL PIPE
7	25048	2	BRASS SPRAY NOZZLE, 1/4 NPT
8	26930	11	HOSE BARB 1/4 MPT X 3/8 HOSE
9	29320	1	FLAP SET, STANDARD HEAD, A7/A9
10	5207250	4	CLAMP, CURTAIN, POWERHEAD
11	300076	1	ADJUSTABLE BLAST ORIFICE, A7
12	5207458	1	CLAMP, CURTAIN, SUCTION, A7
13	522804	1	QUICK DISCONNECT, UPPER SECT
14	521189	2	SKID, STANDARD, A7000
15	20407	5	SPRAY TIP FILTER, 100 MESH
16	20141	4	FEMALE TEE, ECONO NPTF, 1/4"
17	20408	5	SPRAY, TIP 1/4 MPT
18	20420	5	SPRAY TIP RETAINER
19	20441	5	SPRAY TIP, BRASS 8002
20	24222	1	CLAMP, QUICK DISCONNECT
21	24007	11	SPRING, COMP. 11/16 OD X 1-1/4
22	522735	1	DRAG ARM, RH, ADJUSTABLE
23	522736	1	DRAG ARM, LH, ADJUSTABLE
24	24087	1	ELBOW, 90 DEG., 1/4 FPT X 1/4 FPT
25	20928	2	HYD CYL, 1.5 X 6
26	22940	4	SPRING, 1/4 X 1-1/2 X 8"
27	524778	1	HEADSTOP, LH, A-SERIES, STD
28	524779	1	HEADSTOP, RH, A-SERIES, STD
29	5204931	1	RH SPRING BRACKET
30	5204932	1	LH SPRING BRACKET
31	20816	2.2FT	CHAIN, 5/16" , 16-1/4" LONG
32	20815	5.8FT	3/16" CHAIN 26 LINKS
33	29594	1	HOSE, 14" X 22"
34	21049	1	HOSE, 14" DIA. X 38", 3" CUFF
35	66521	1	14-3/4" T-BOLT CLAMP
36	5215135	1	PLATE,COVER,ACCESS,BLASTER
37	5215512	1	FLAP, BLAST ORIFICE
38	29342	1	FLAP SET, HEAD STOP, A7, A8,A9
39	65765	4	ELBOW, 90° 3/8 MORFS X 1/4 NPT
40	5213212	1	BEARING SHIM, ADJ BLS ORIF, A7

204S00 - HEAD, SIDE BLAST

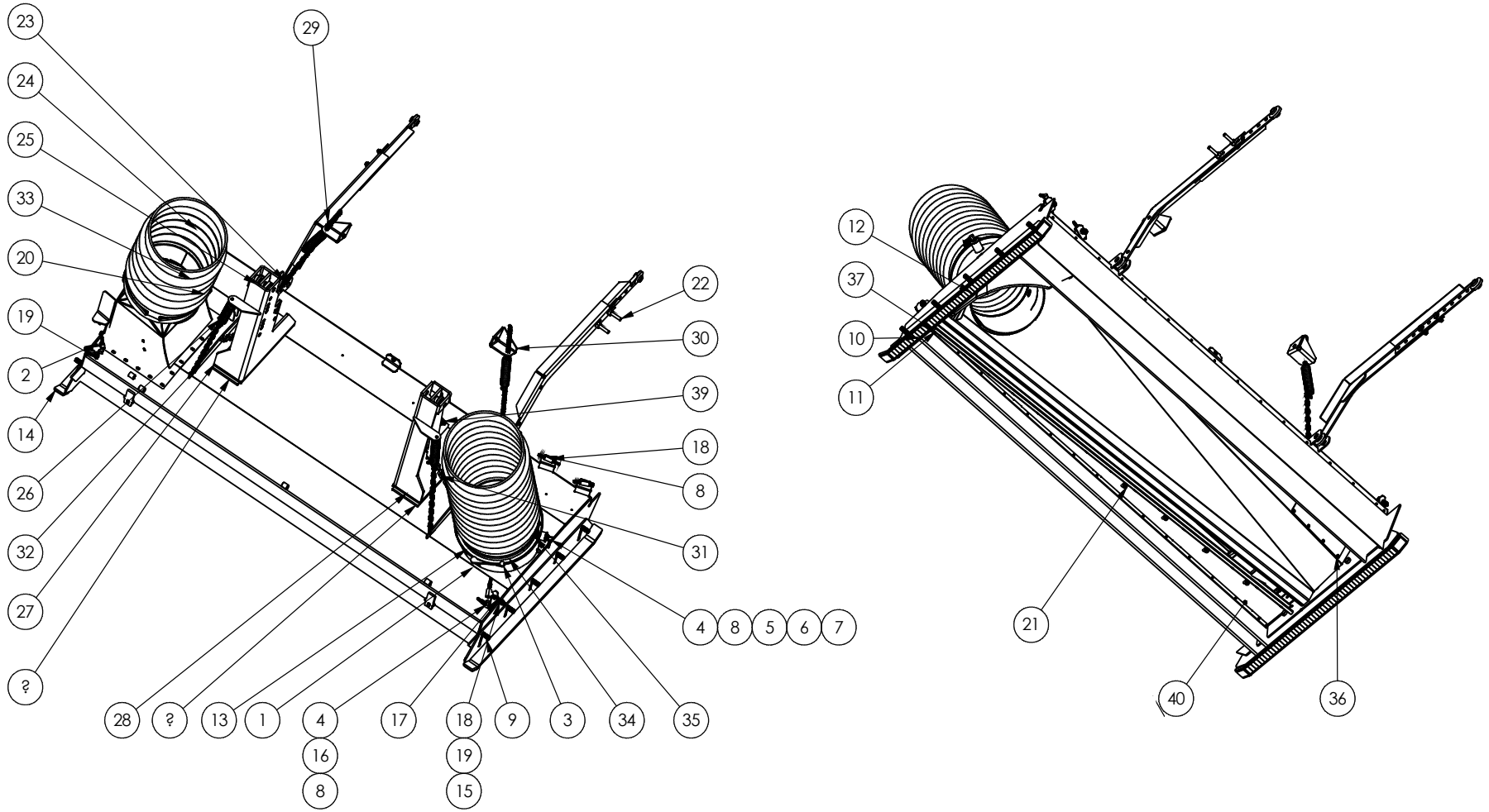

204R90 - HEAD, SIDE BLAST, XTRA SUCTION NOZZLE

ITEMS NOT SHOWN

ITEM NO.	PART NUMBER	QTY.	DESCRIPTION
41	65698	1	PUMP, DOUBLE CASAPPA 1.03 CC
42	29986	1	ACTUATOR, 4" K2-G20-12B-BR-04R
43	21571	1	VALVE, 1/4" FLOW CONTROL
44	203931	1	KIT, HEAD WATER INTAKE SYS
45	523181	1	WELD, KEDGE
46	204L10	1	KIT, HOSE STANDARD HEAD A7&A8

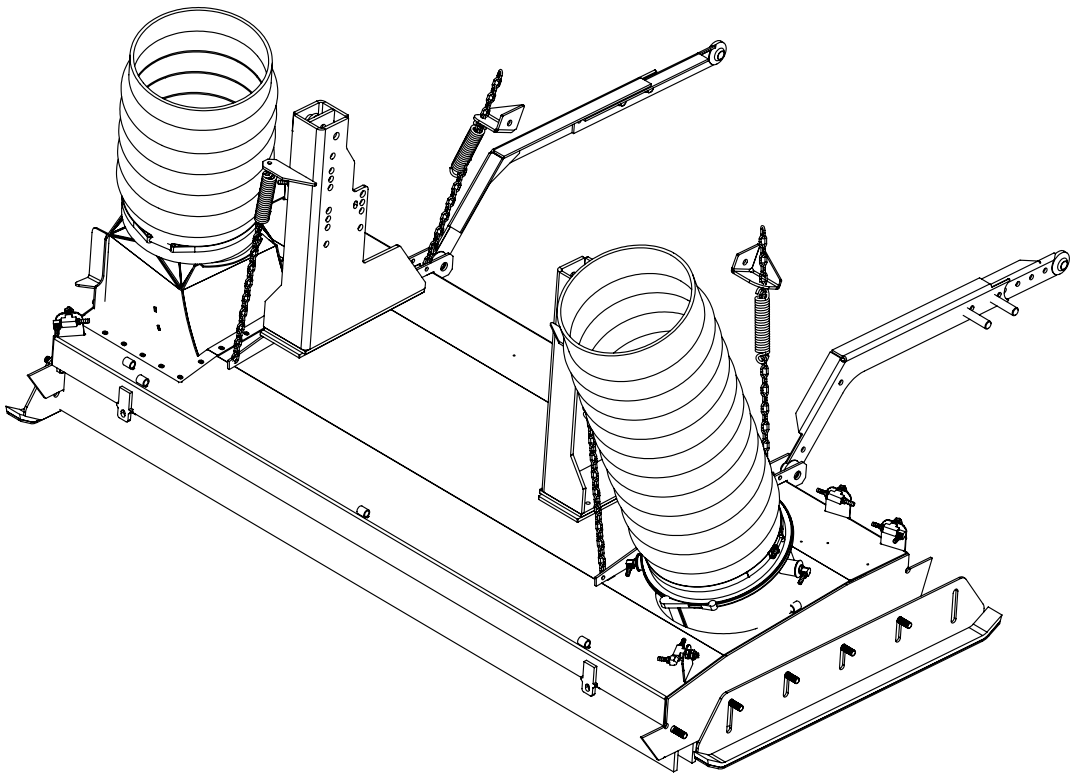

ITEM NO.	PART NUMBER	QTY.	DESCRIPTION
1	525590	1	HEAD,WELD,BLASTER TRANSITION
2	523179	1	WELD, SIDE BLASTER, BOLT-ON
3	28445	1	CLAMP, V16-1/8
4	20133	6	ELBOW,90,1/4 MNPT X FNPT
5	20238	3	COUPLING .75 SCH80
6	22971	3	GROMMET, 1/2" UNISEAL PIPE
7	25048	3	BRASS SPRAY NOZZLE, 1/4 NPT
8	26930	12	HOSE BARB 1/4 MPT X 3/8 HOSE
9	29320	1	FLAP SET, STANDARD HEAD, A7/A9
10	5207250	4	CLAMP, CURTAIN, POWERHEAD
11	300076	1	ADJUSTABLE BLAST ORIFICE, A7
12	5207458	1	CLAMP, CURTAIN, SUCTION, A7
13	522804	1	QUICK DISCONNECT, UPPER SECT
14	521189	2	SKID, STANDARD, A7000
15	20407	5	SPRAY TIP FILTER, 100 MESH
16	20141	4	FEMALE TEE, ECONO NPTF, 1/4"
17	20408	5	SPRAY, TIP 1/4 MPT
18	20420	5	SPRAY TIP RETAINER
19	20441	5	SPRAY TIP, BRASS 8002
20	24222	1	CLAMP, QUICK DISCONNECT
21	24007	11	SPRING, COMP. 11/16 OD X 1-1/4
22	522735	1	DRAG ARM, RH, ADJUSTABLE
23	522736	1	DRAG ARM, LH, ADJUSTABLE
24	24087	1	ELBOW, 90 DEG., 1/4 FPT X 1/4 FPT
25	20928	2	HYD CYL, 1.5 X 6
26	22940	4	SPRING, 1/4 X 1-1/2 X 8"
27	524778	1	HEADSTOP, LH, A-SERIES, STD
28	524779	1	HEADSTOP, RH, A-SERIES, STD
29	5204931	1	RH SPRING BRACKET
30	5204932	1	LH SPRING BRACKET
31	20816	2.2FT	CHAIN, 5/16" , 16-1/4" LONG
32	20815	5.8FT	3/16" CHAIN 26 LINKS
33	29594	1	HOSE, 14" X 22"
34	21049	1	HOSE, 14" DIA. X 38", 3" CUFF
35	66521	1	14-3/4" T-BOLT CLAMP
36	5215135	1	PLATE,COVER,ACCESS,BLASTER
37	5215512	1	FLAP, BLAST ORIFICE
38	29342	1	FLAP, STD HEAD UPSTOP
39	65765	4	ELBOW, 90° 3/8 MORFS X 1/4 NPT
40	5213212	1	BEARING SHIM, ADJ BLS ORIF, A7

204R90 - HEAD, SIDE BLAST, XTRA SUCTION NOZZLE

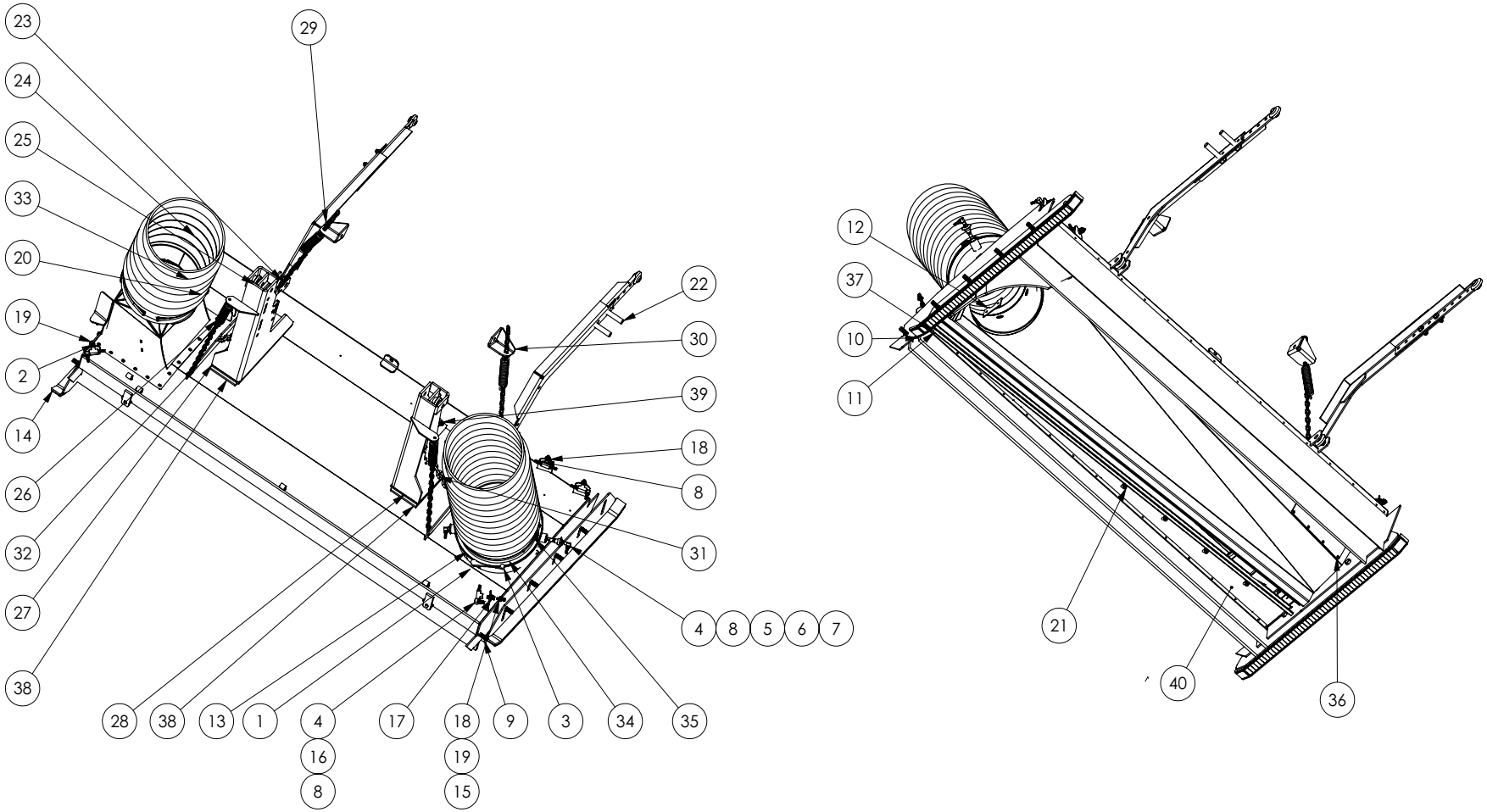

Hopper

3

203681 - HOPPER SPRAY BAR, 4 NOZZLES

ITEM NO.	PART NUMBER	QTY.	DESCRIPTION
1	5207733	1	SPRAY BAR 42" HOPPER/HEAD
2	20972	1	ELBOW, 90° 1/2 NPT BRASS
3	21723	1	REDUCER, 1/2 X 3/4 BELL PIPE
4	66412	4	STRAINER, 50M BRASS, UNIJET
5	20408	4	MALE INLET 1/4 MPT
6	53067	1	CAP, 3/4
7	21342	1	REDUCER, 1/2 MNPT X 1/4 FNPT,BRASS
8	20406	4	SPRAY TIP, BRASS
9	32282	2	U-BOLT, 1/4-20 X 1-1/8
10	5216714	2	TIEBAR, 1/4" U-BOLT
11	20420	3	SPRAY TIP RETAINER

ITEMS NOT SHOWN

ITEM NO.	PART NUMBER	QTY.	DESCRIPTION
12	26024	1	5/8" GROMMET
13	28343	1	HOSE KIT, HOPPER SPRAY BAR

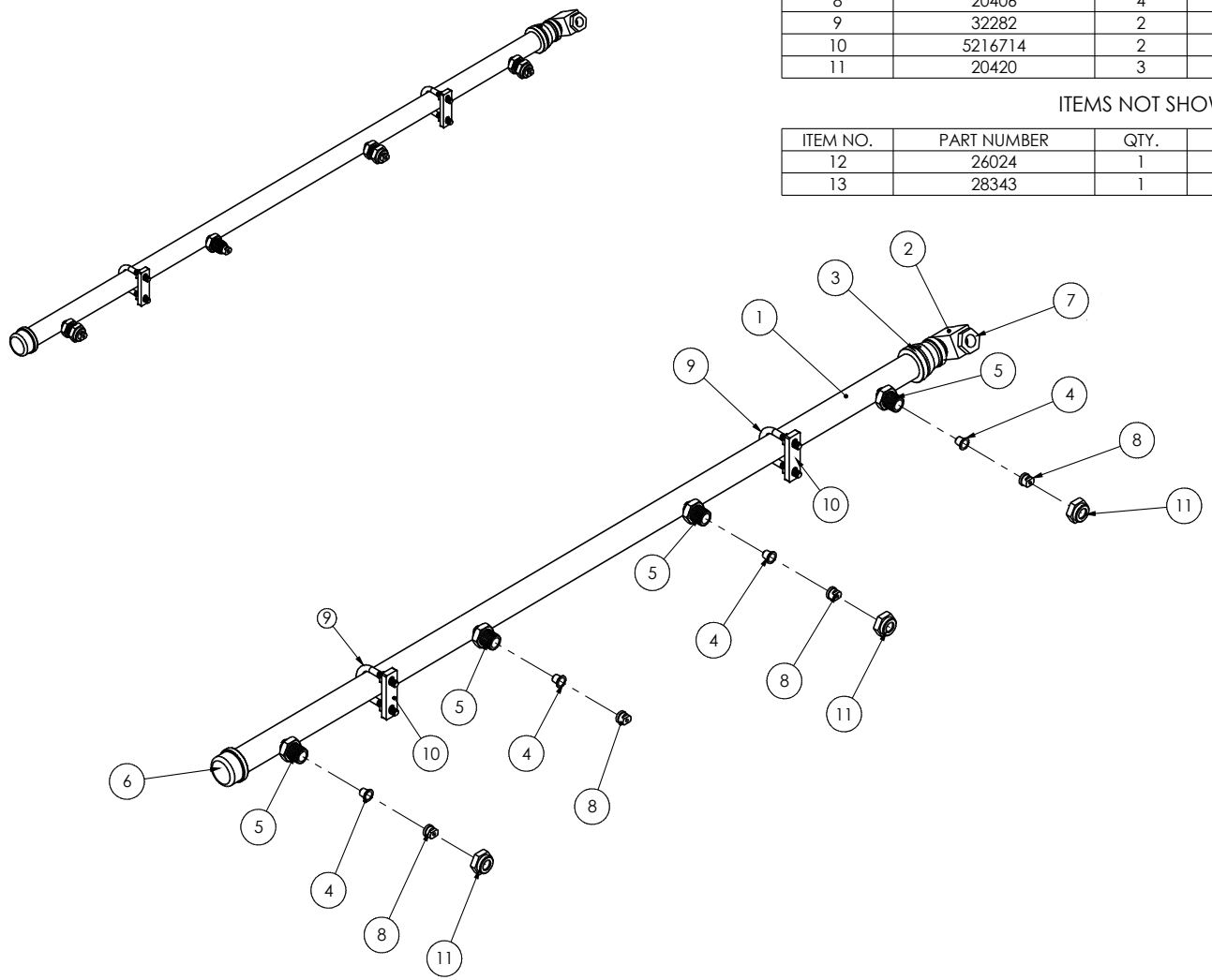

203939 - SPRAY BAR HOPPER 7 NOZZLES

ITEM NO.	PART NUMBER	QTY.	DESCRIPTION
1	5213720	1	7 NOZZLE SPRAYBAR PIPE
2	20972	1	ELBOW, 90° 1/2 NPT BRASS
3	21723	1	REDUCER, 1/2 X 3/4 BELL PIPE
4	66412	7	STRAINER, 50M BRASS, UNIJET
5	20408	7	SPRAY, TIP 1/4 MPT
6	53067	1	CAP, 3/4
7	20406	7	SPRAY TIP, BRASS
8	32282	2	U-BOLT, 1/4-20 X 1-1/8
9	5216714	2	TIEBAR, 1/4" U-BOLT
10	20420	7	SPRAY TIP RETAINER
11	26930	1	HOSE BARB 1/4 MPT X 3/8 HOSE
12	20661	1	REDUCER, 1/2 MNPT X 1/4 FNPT,BRASS

ITEMS NOT SHOWN

ITEM NO.	PART NUMBER	QTY.	DESCRIPTION
13	26024	1	5/8" GROMMET
14	203684	1	CONSOLE KIT, HOPPER SPRAY BAR

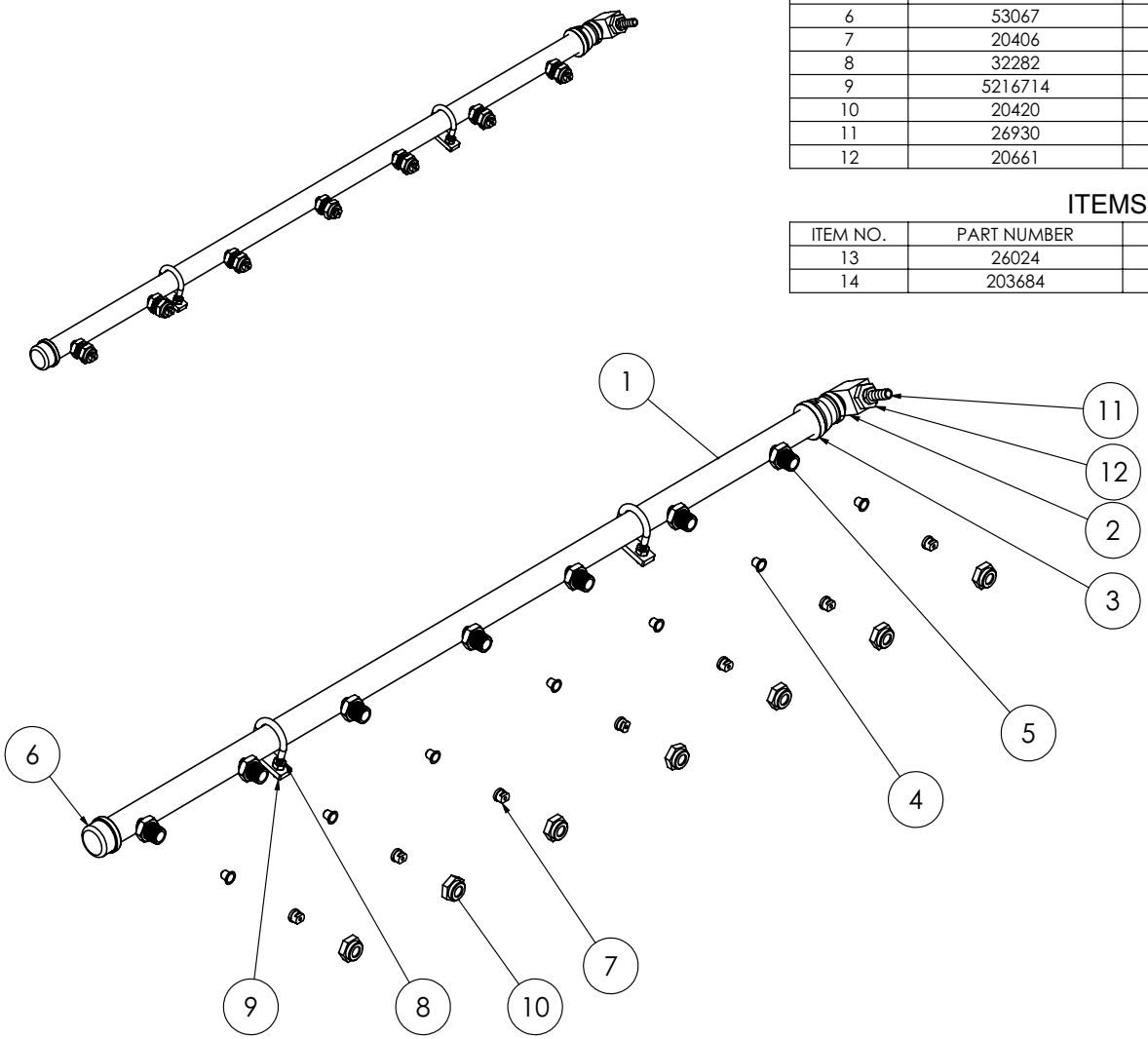

204S02 - EXT HOPPER SWITCH LH

ITEM NO.	PART NUMBER	DESCRIPTION	QTY.
1	66780	SWITCH, LEFT HAND EXT	1
2	525592	WELD, LH EXT HOP SWITCH,A7/A9T	1
3	5223286	PLATE, EXT HOP SWITCH,A7T/A9T	1
4	67116	CLIP, DT & DTM SERIES RECEP.	1
5	34034	LOCKNUT, M5	2

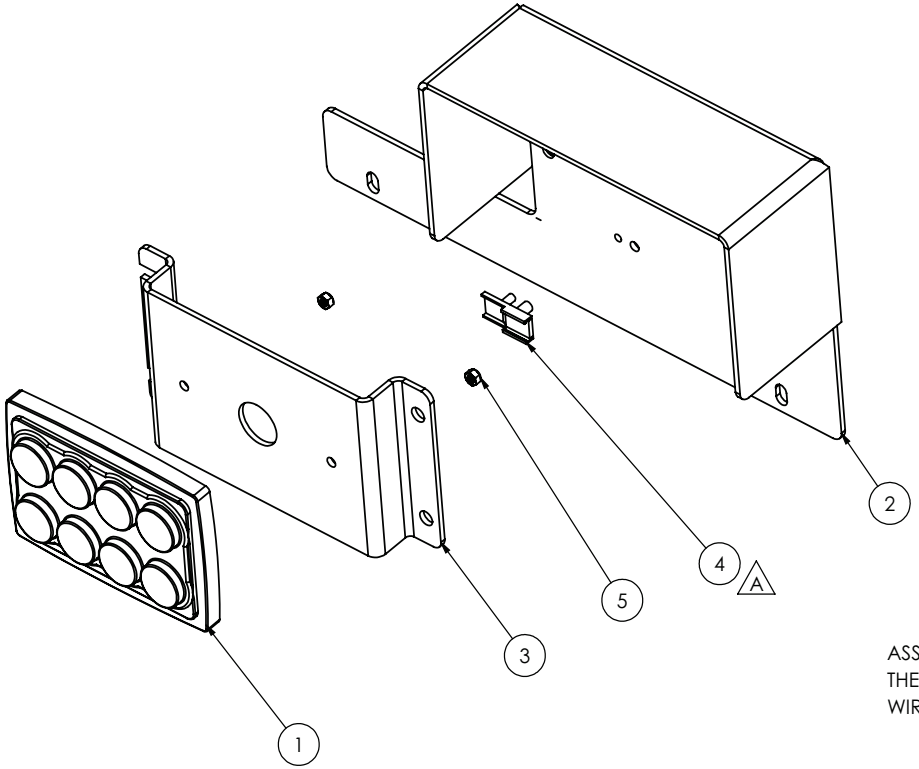

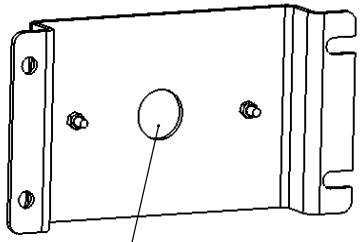

ASSEMBLE 66780 TO 5223286
THEN SILICONE (SS-301A) AROUND
WIRES BEFORE ATTACHING TO 525592

204S03 - EXT HOPPER SWITCH RH

ITEM NO.	PART NUMBER	DESCRIPTION	QTY.
1	67523	SWITCH, RIGHT HAND EXT	1
2	5223286	PLATE, EXT HOP SWITCH,A7T/A9T	1
3	525593	WELD, RH EXT HOP SWITCH,A7/A9T	1
4	67116	CLIP, DT & DTM SERIES RECEP.	1
5	34034	LOCKNUT, M5	2
6	66646	HARNESS, EXTENSION, CAN MODULE	1

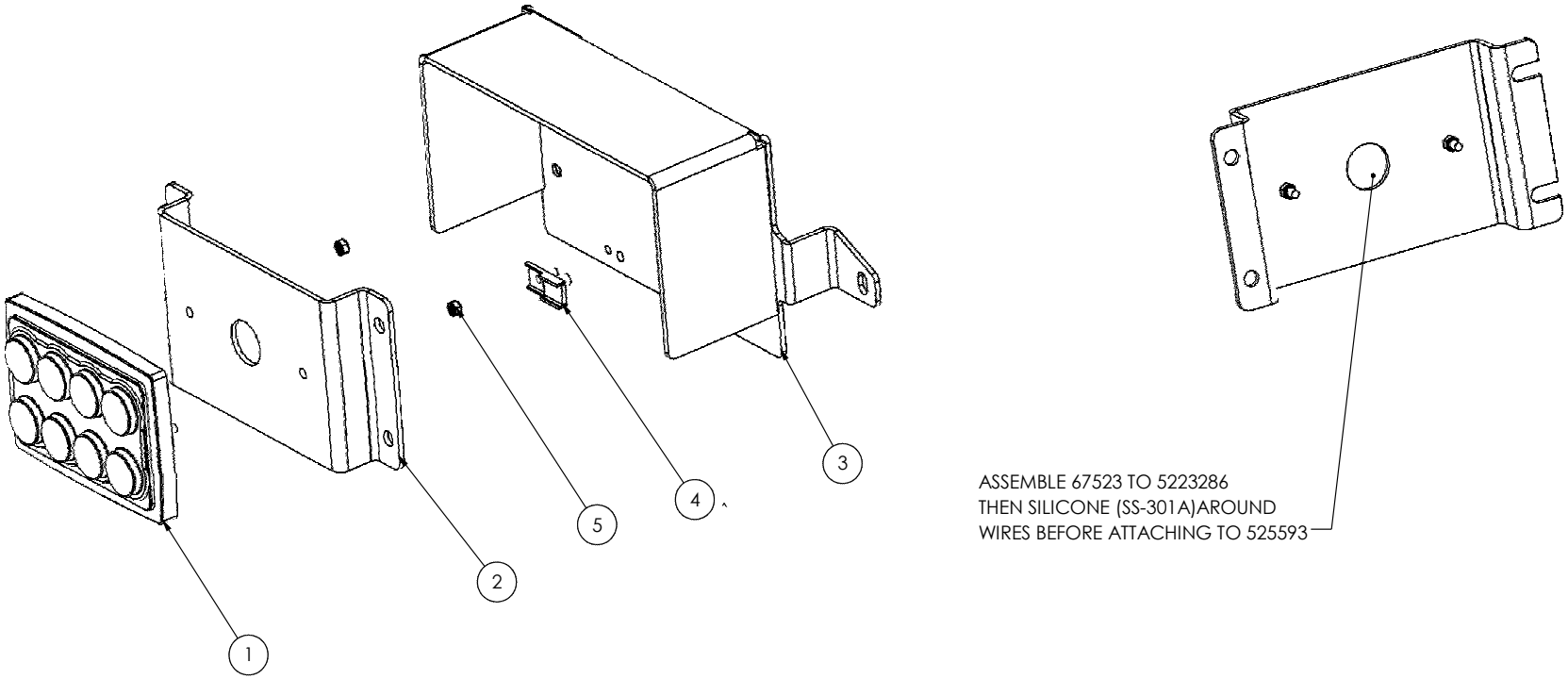

203B77 - HOPPER DELUGE

ITEM NO.	PART NUMBER	QTY.	DESCRIPTION
1	522659	1	DELUGE INLET PIPE (OPT)
2	20280	1	ELBOW,90°,2" NPT STREET
3	20831	2	CLAMP,2 1/2" MUFFLER U-BOLT
4	20957	1	ELBOW, 2" NPT GALVANIZED
5	23643	1	DUST CAP, 2" WATER FILL
6	23644	1	CAM, 2.0 MALE LOCK
7	23646	1	TEE, 2" GALV
8	24075	1	LANYARD, 6"
9	5207723	1	TUBE,HORIZ,DELUGE
10	29071	2	NOZZLE, DISTRIBOJET 95 DEGREE
11	64274	2	KEY RING, SPLIT, 1"

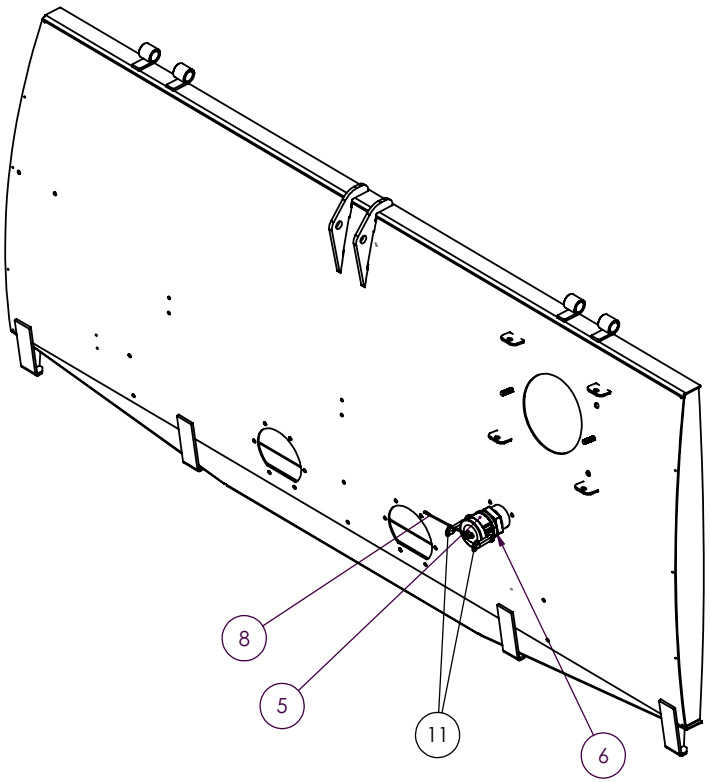

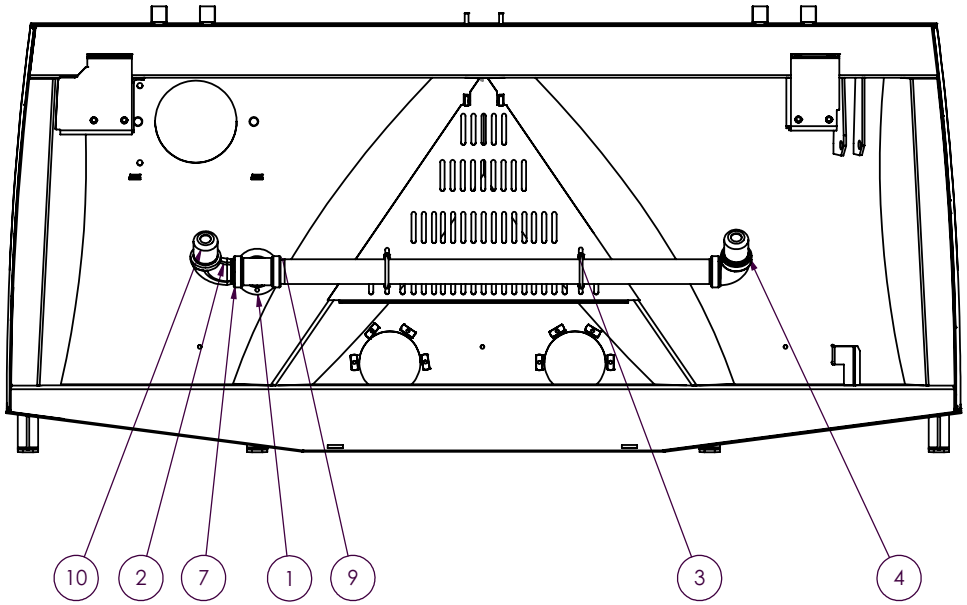

203B77 - HOPPER DELUGE

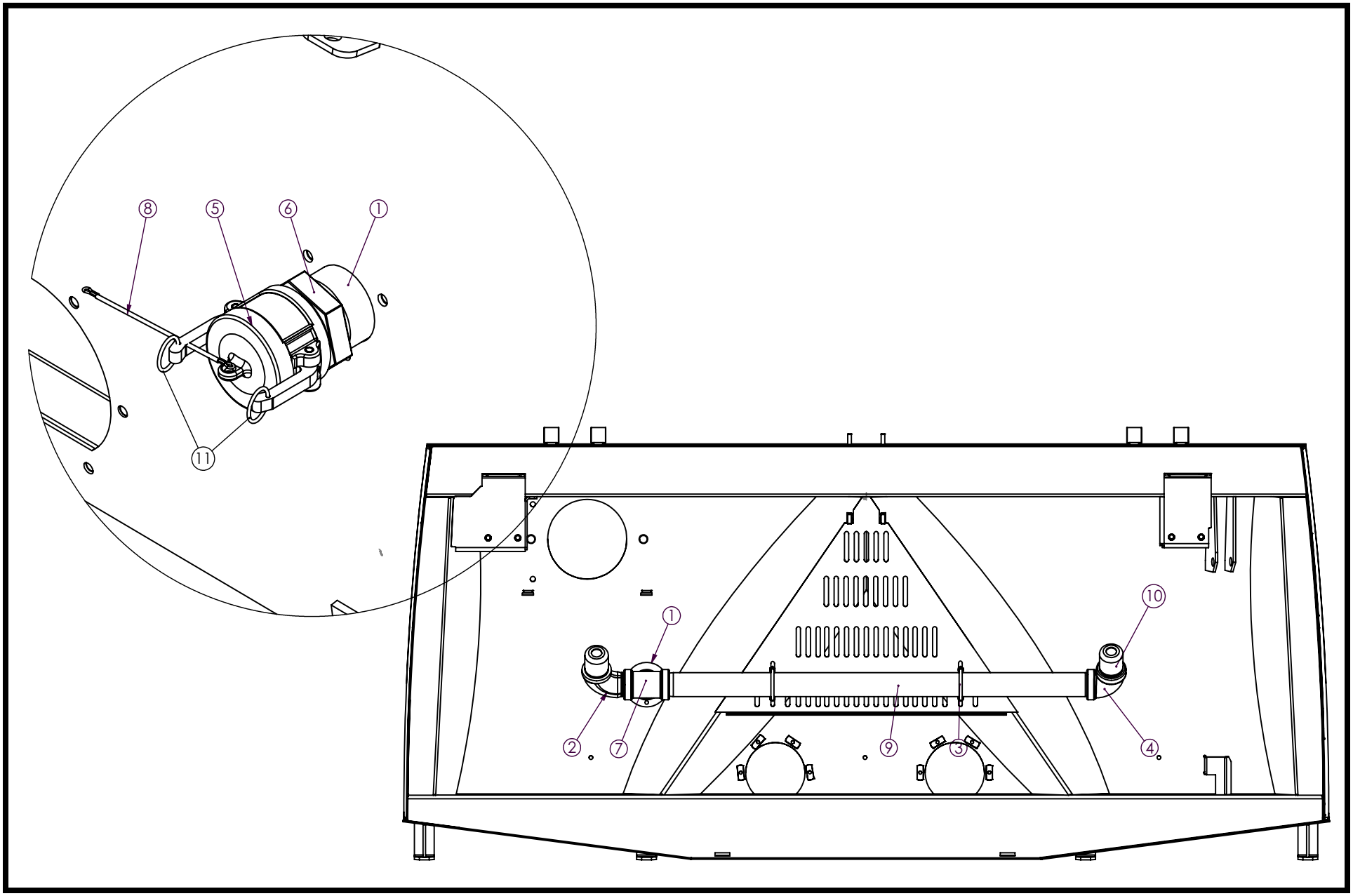

204G28 - HOPPER DELUGE 4 NOZZLES

ITEM NO.	PART NUMBER	QTY.	DESCRIPTION
1	522659	1	DELUGE INLET PIPE (OPT)
2	20831	2	CLAMP,2 1/2" MUFFLER U-BOLT
3	23643	1	DUST CAP, 2" WATER FILL
4	23644	1	CAM, 2.0 MALE LOCK
5	23646	3	TEE, 2" GALV
6	24075	1	LANYARD, 6"
7	5207723	1	TUBE,HORIZ,DELUGE
8	29071	2	NOZZLE, DISTRIBOJET 95 DEGREE
9	20280	4	ELBOW,90°,2" NPT STREET
10	20275	1	NIPPLE, 2.0 X CLOSE GALV
11	53072	2	BUSHING, 2" X 1" NPT
12	65409	2	NOZZLE, FULLJET 1" NPT

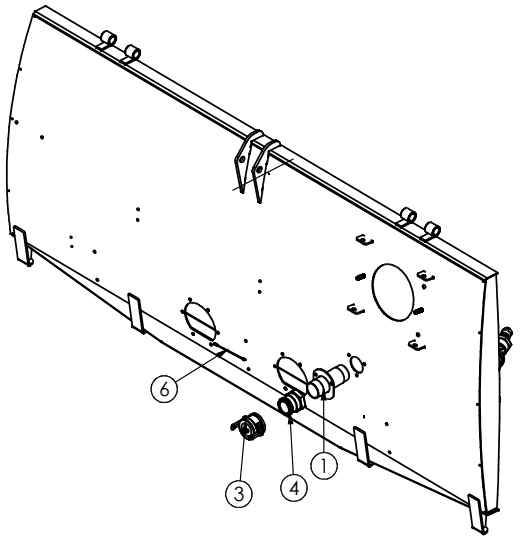

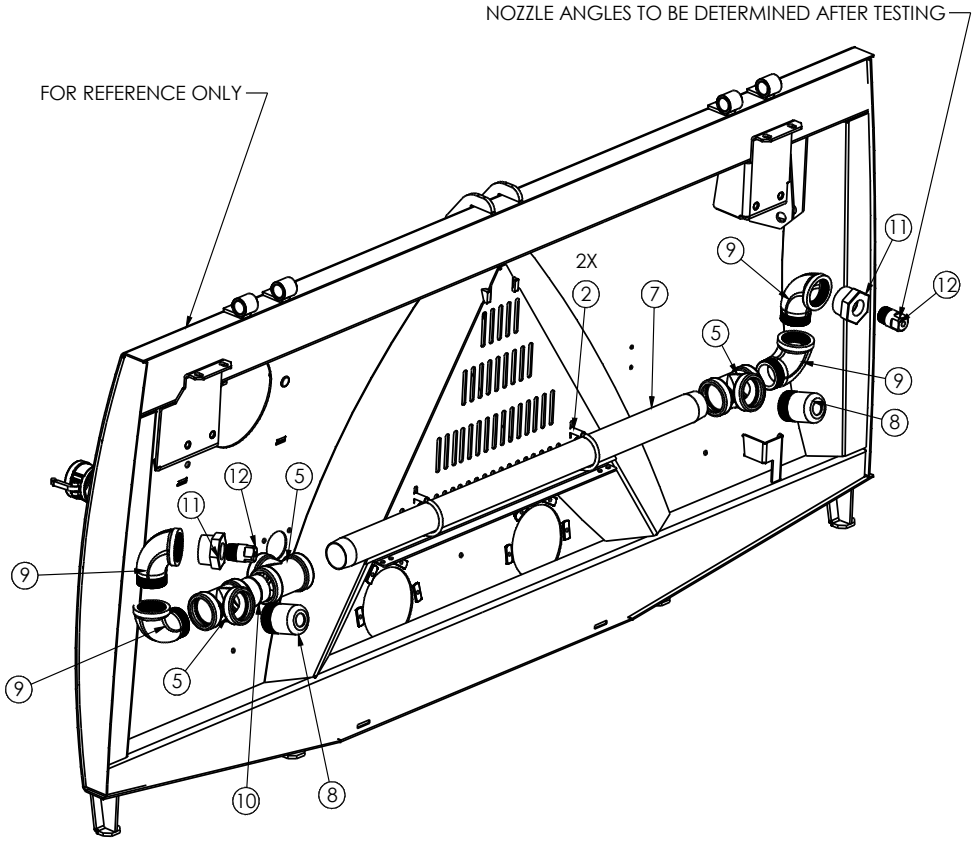

203640 - SOUND SUPPRESSION

ITEM NO.	PART NUMBER	QTY.	DESCRIPTION
1	26806	1	1" SOUNDFOAM 'M' UNISEAL BLACK
2	29260	1	1" SOUNDFOAM 'M'UNISEAL BLACK

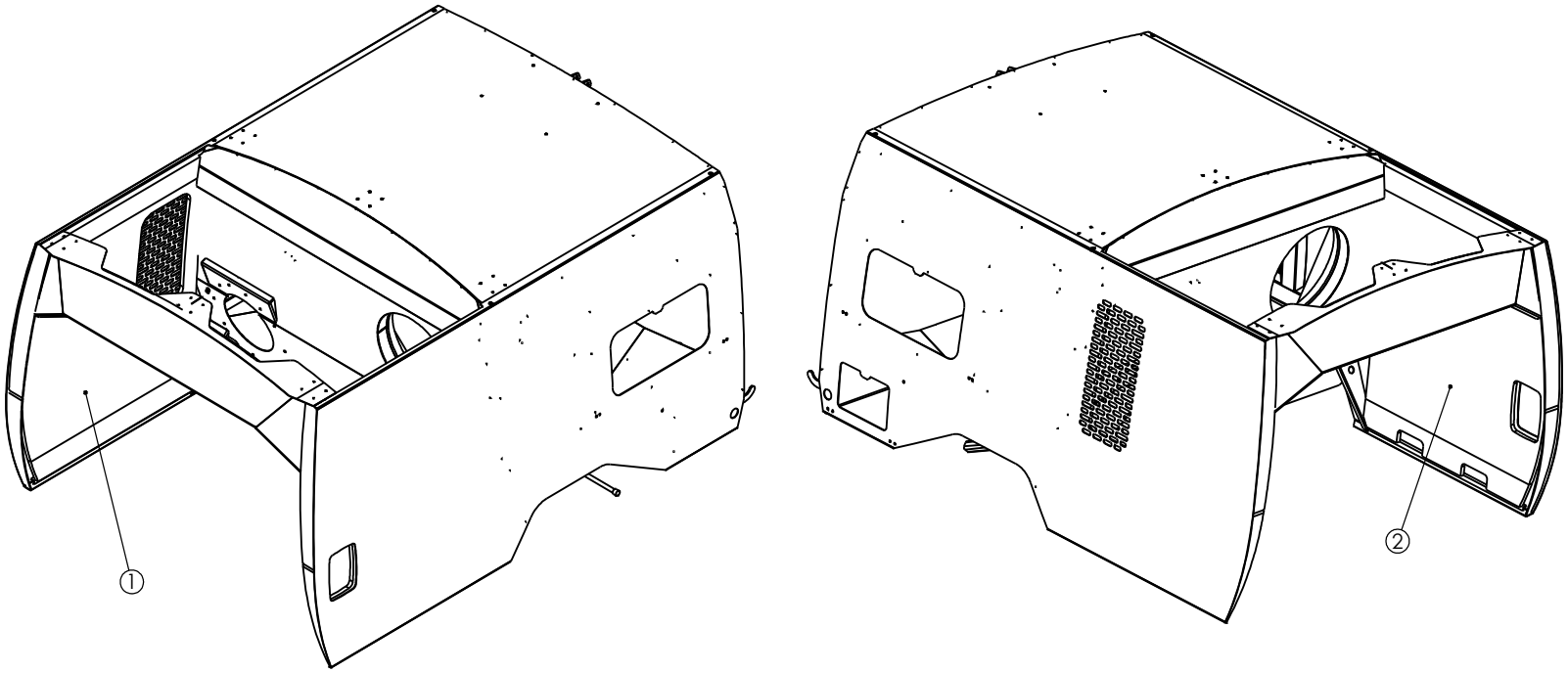

204R41 - HOPPER SHAKER

ITEM NO.	PART NUMBER	DESCRIPTION	QTY.
1	23188	VIBRATOR	1

ITEMS BELOW NOT SHOWN

ITEM NO.	PART NUMBER	DESCRIPTION	QTY.
2	64606	PLUG, 2 CONTACT, SIZE 12 DTM	1
3	64619	WEDGELOCK, 2 WAY RECEPTACLE, D	1

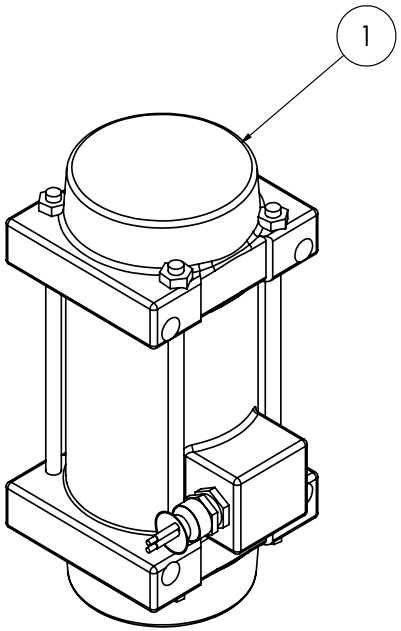

203G23 - HOPPER DOOR OPEN INDICATOR

ITEM	DESCRIPTION	QUANTITY	UM
+20288	CONNECTOR, BUTT	1	EA
+24270	.25 MALE 16-14 GA QUICK DISC.	1	EA
+28179	SENSOR, PROXIMITY 18 MM NC.	1	EA
+3001260	PROX SENSOR MOUNT	1	EA

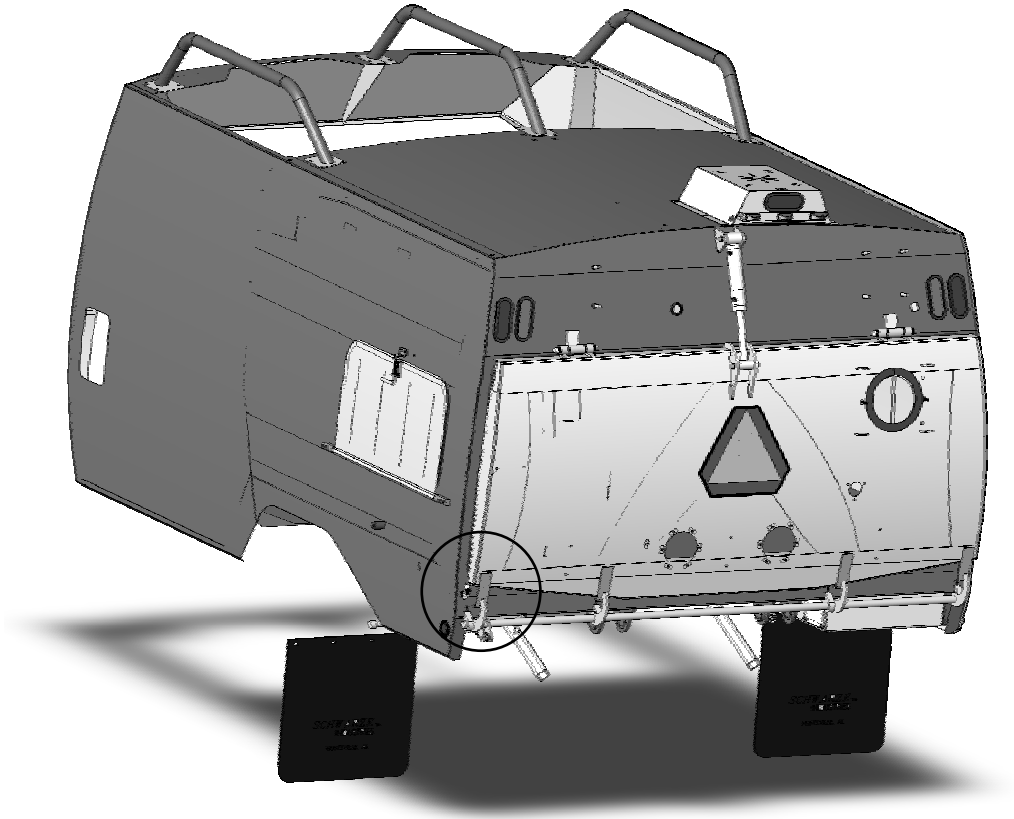

204H12 - AUTO DRP DN SCREEN BRACKET

ITEM NO.	PART NUMBER	DESCRIPTION	Default/QTY.
1	204H11	ARM ASSY, DRP DWN SCRN BRACKET	2
2	5219914	STRIKER MNT, DRP DWN SCREEN	2
3	5219916	PLATE, DROP DOWN SCRN LIMIT	2
4	5219913	STRIKER PLATE, DRP DWN SCREEN	2
5	5221804	BACKING PLATE, A9 DROP DN SCRN	2

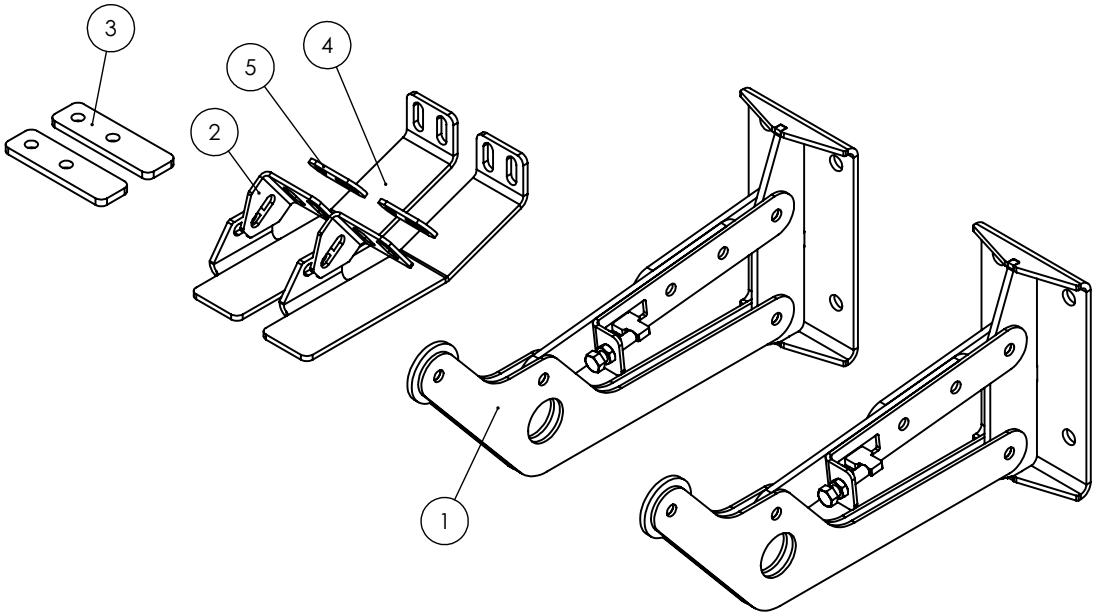

204H11 - AUTO DRP DN SCREEN BRACKET ARM

ITEM NO.	PART NUMBER	DESCRIPTION	Default/QTY.
1	5219911	ROLLER, DRP DWN SCRN BRKT	1
2	524667	WELDMENT, STOP LINKAGE	1
3	5219906	FIXED LINKAGE, DROP SCRN BRKT	1
4	524666	WELDMENT, CENTER LINK	1
5	HBOLT 0.3750-24x1.5x1.5-N		1
6	HJNUT 0.3750-24-D-N		1
7	5219907	ARM, DRP DWN SCRN BRKT	2
8	524665	WELDMENT, ARM BRACKET	1
9	5219915	ROLLER AXLE, DRP DWN SCREEN	1

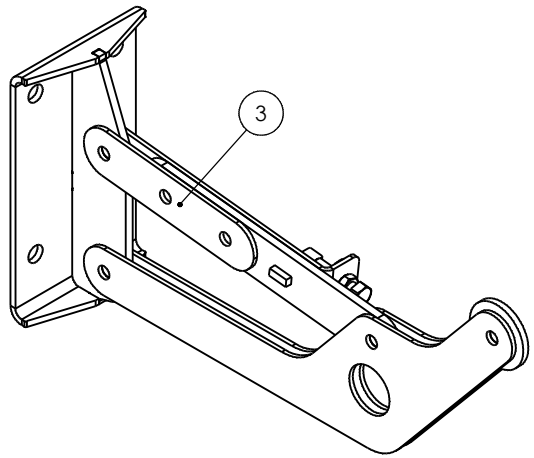

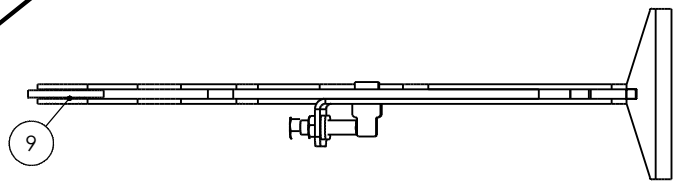

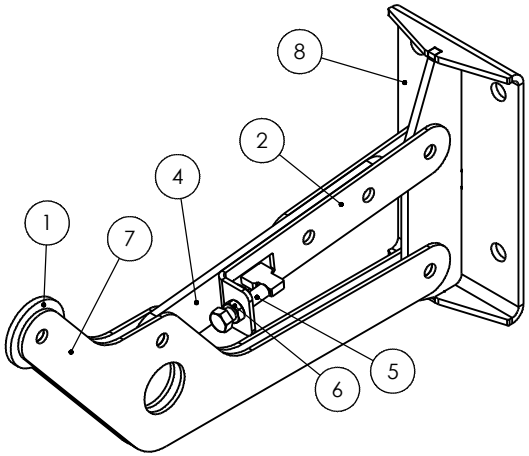

204H83 - HOPPER SCREEN SHAKER

ITEM NO.	PART NUMBER	QTY.	DESCRIPTION
1	63325	1	VIBRATOR, HOPPER SCREEN, GS6
2	3002380	1	BRACKET, SCREEN SHAKER A7

ITEMS BELOW NOT SHOWN

ITEM NO.	PART NUMBER	QTY.	DESCRIPTION
3	62920	1	CARL, MOM-OFF-MOM, FLUSH BKT
4	20326	1	WIRE, 10 GA - BLACK
5	20860	8	CONNCTR, CBLE SEAL, 14-12 GA
6	20861	2	2-PIN WEATHER PACK SHROUD
7	20864	4	CONNECTOR, FEMALE PIN
8	20879	2	2-PIN WEATHER PACK TOWER
9	26106	1	RELAY, 75 AMP
10	62708	1	SWITCH ACTUATOR, HOPPER SHAKER
11	20881	4	CONNECTOR, MALE PIN
12	20155	2	CLAMP, 1.50" RUBBER LINED
13	21622	1	WIRE, 10 GA - YELLOW
14	21717	1	BREAKER, 40 AMP
15	SK-2352	1	DIAGRAM, WIRING SCREEN SHAKER

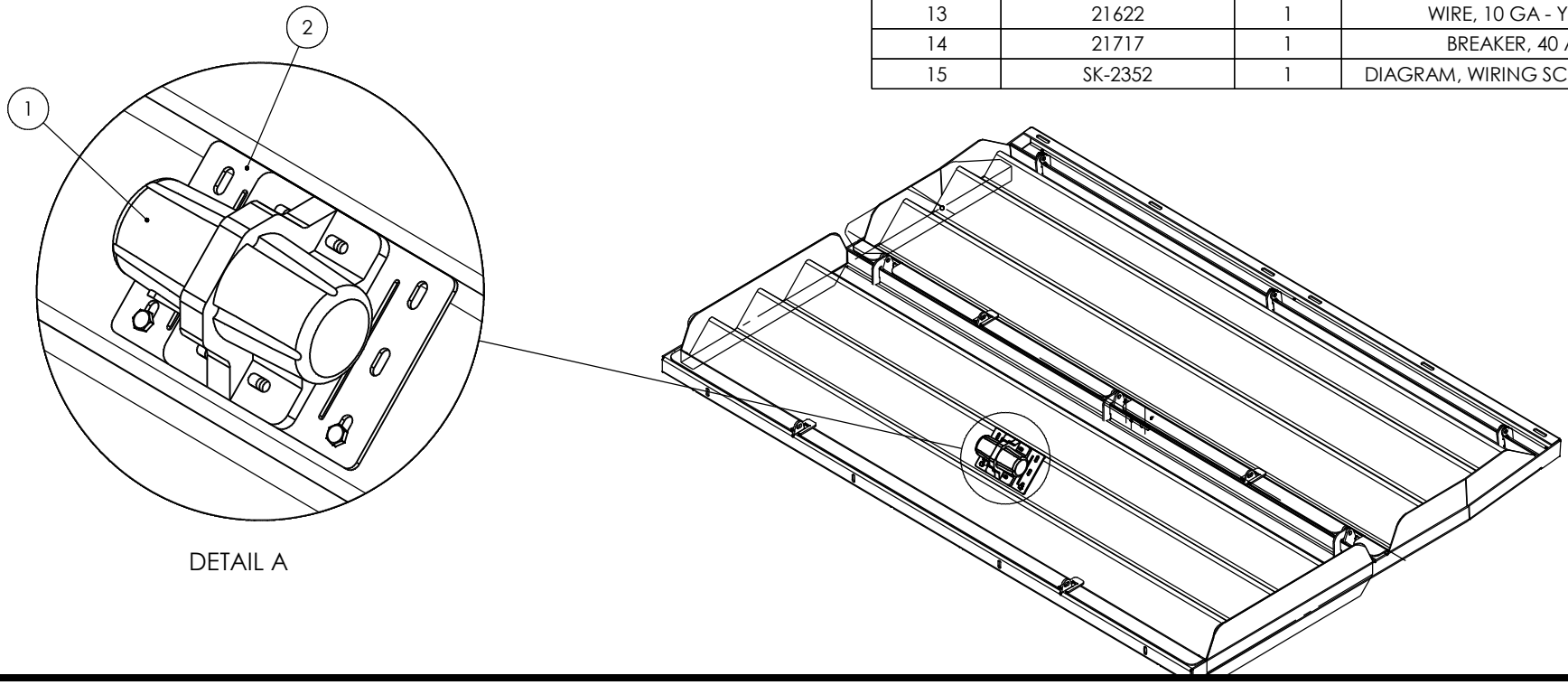

DETAIL A

204M67 - DROP DOWN SCREEN, SS

ITEM NO.	QTY.	PART NUMBER	DESCRIPTION
1	4	28726	RETAINER,SNAP (SAFETY)
2	6	28727	PIN CLEVIS,3/8 X 1-1/2"
3	1	525285	SCREEN FRAME DD A9 3CR12
4	1	525286	SCREEN REAR DD A9 3CR12
5	1	525287	SCREEN FRONT DD A9 3CR12
6	1	5222243	FILLER, SCREN, RH,A9,3CR12
7	1	5222244	FILLER,SCREEN,LH,A9,3CR12
8	1	5222240	PLATE WINDOW UPPER A9 3CR12
9	1	5222242	PLATE WINDOW MID A9 3CR12
10	1	5222241	PLATE WINDOW WINCH A9 3CR12

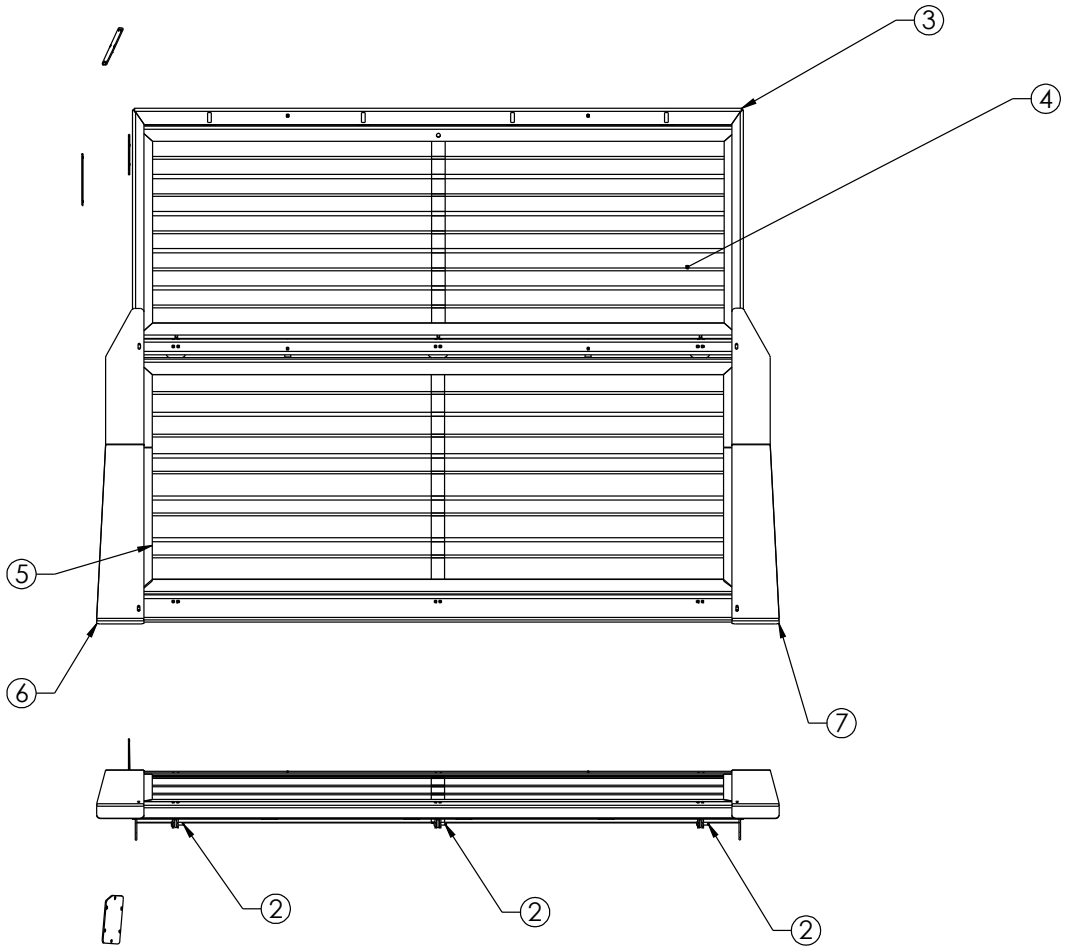

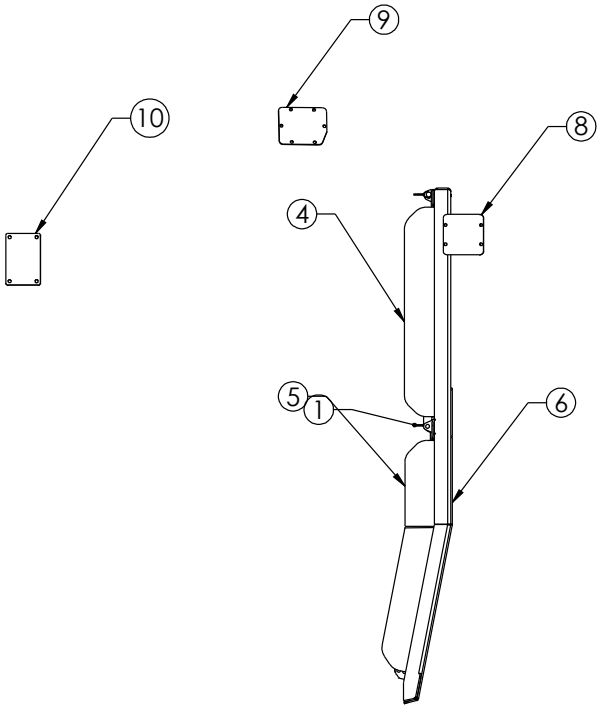

203M62 - DROP DOWN SCREEN

ITEM NO.	PART NUMBER	QTY.	DESCRIPTION
1	523261	1	SCREEN FRAME DROP DOWN
2	523262	1	SCREEN, REAR DROP DOWN
3	523263	1	SCREEN, FRONT DROP DOWN A9000
4	5215486	1	FILR,SCR,RH,A9-MS
5	5215485	1	FILR,SCR,LH,A9-SS
6	5215499	1	PLATE WINDOW UPPER A9 3CR12
7	5215500	1	PLATE WINDOW MID A9 3CR12
8	28726	8	RETAINER,SNAP (SAFETY)
9	28727	6	PIN CLEVIS,3/8 X 1-1/2"
10	5215501	1	PLATE WINDOW WINCH A9 3CR12

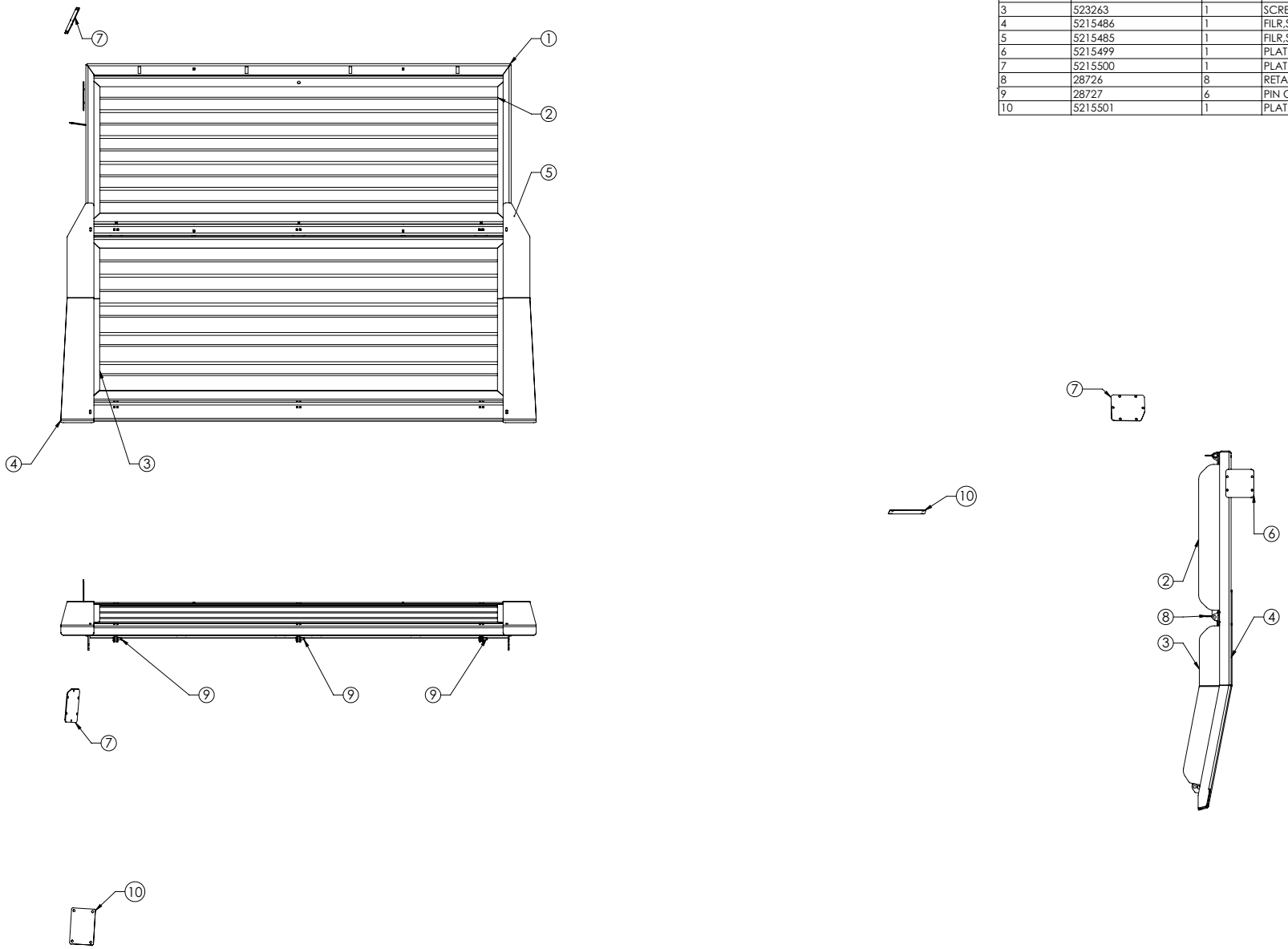

203J00 - REMOTE HOPPER DD SCREEN A9

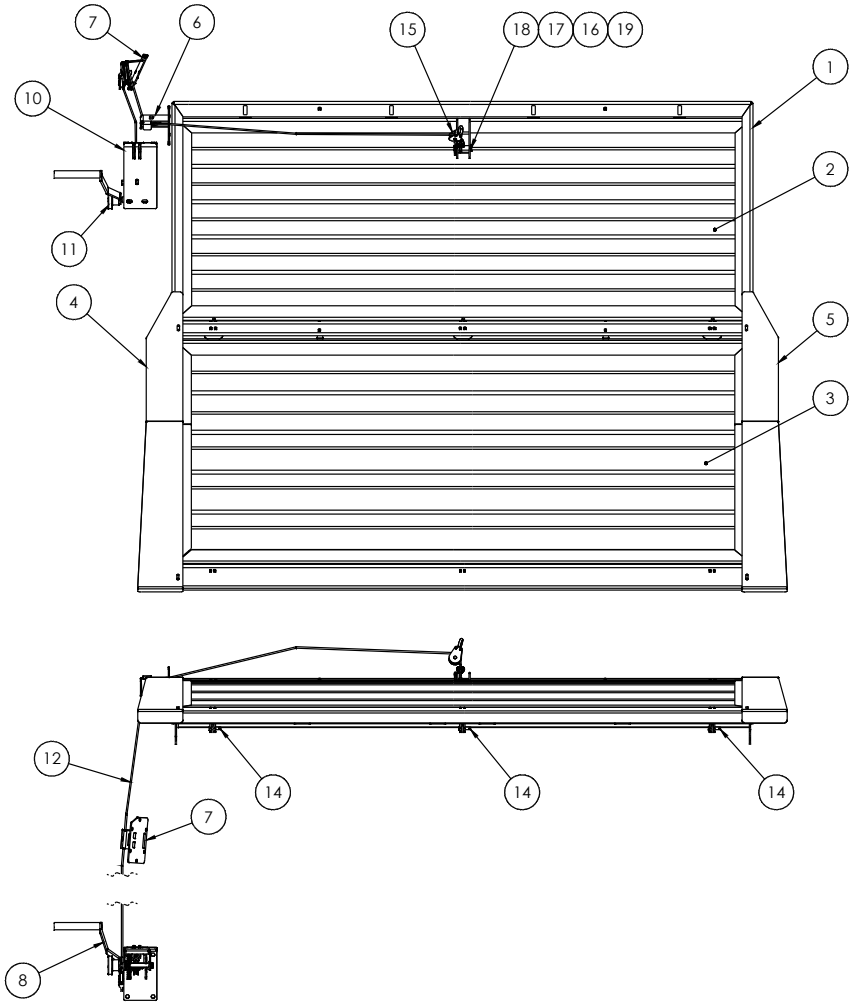

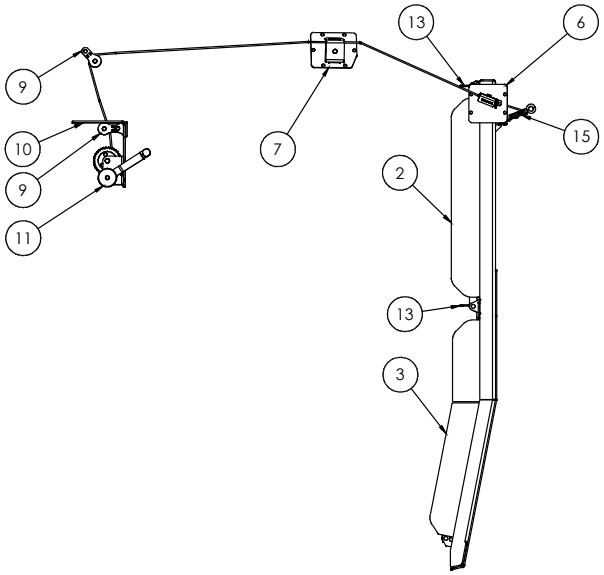

ITEM NO.	QTY.	PART NUMBER	DESCRIPTION
1	1	523261	SCREEN FRAME DROP DOWN
2	1	523262	SCREEN, REAR DROP DOWN
3	1	523263	SCREEN, FRONT DROP DOWN A9000
4	1	5215486	FILR,SCR,RH,A9-MS
5	1	5215485	FILR,SCR,LH,A9-SS
6	1	523256	BRACKET,UPPER,R-DD SCRNS
7	1	523260	BRACKET, DROP DOWN SCREEN RH
8	1	23958-A9	WINCH,RATCHET,900 LBS
9	2	20218	PULLEY BLOCK
10	1	523264	MOUNTING, WINCH
11	1	54205	KNOB, 1/2-20 THD'D.
12	21FT	29080-15	3/16" SS WIRE CABLE
13	4	28726	RETAINER,SNAP (SAFETY)
14	6	28727	PIN CLEVIS,3/8 X 1-1/2"
15	1	29918	BLOCK AND SHEAVE
16	1	21824	CLAMP, 3/16" CABLE
17	1	21537	THIMBLE,1/4" CABLE
18	1	23977	5/8" X 2.25 CLEVIS PIN
19	1	24074	HAIRPIN COTTER, .148" DIA SST

203M63 - DROP DOWN SCREEN, SS

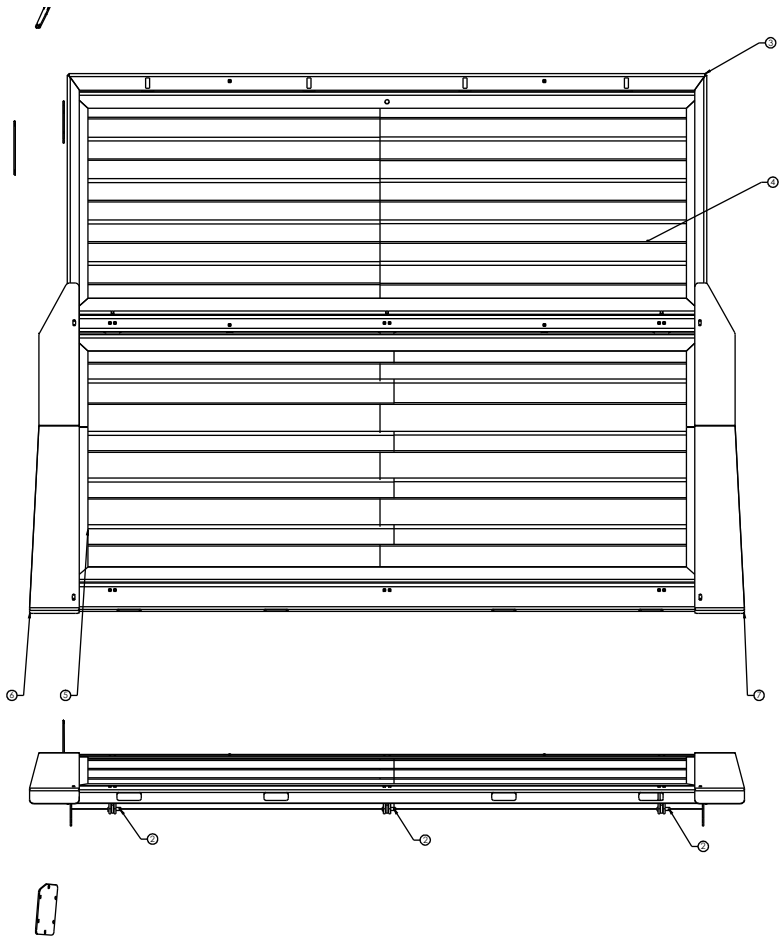

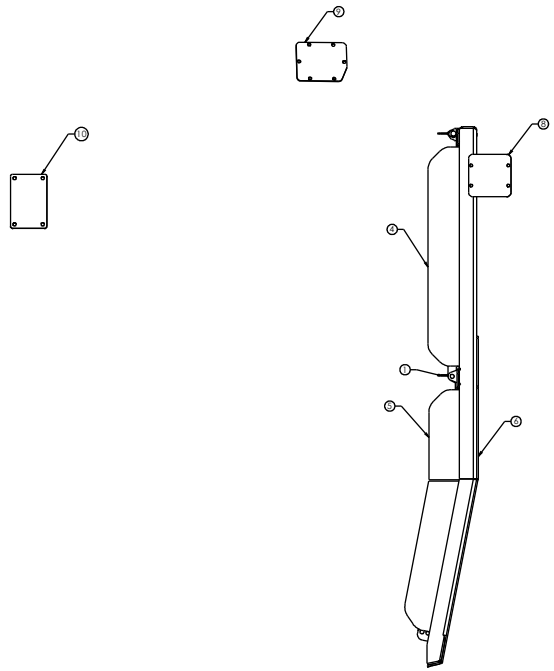

ITEM NO.	QTY.	PART NUMBER	DESCRIPTION
1	4	28726	RETAINER,SNAP (SAFETY)
2	6	28727	PIN CLEVIS,3/8 X 1-1/2"
3	1	523340	FRAME,SCRN,D-DN,A9-SS
4	1	523341	DROP-DN SCRN,A9000-SS
5	1	523342	SCREEN,D-DN,FRONT,A9-SS
6	1	5215856	FILLER, SCREN, RH,A9-SS
7	1	5215857	FILLER,SCREEN,LH,A9-SS
8	1	5215806	PLATE,WINDOW,UPPER,SS
9	1	5215808	PLATE,MID,SS
10	1	5215807	COVER, WINCH MOUNT, SS

203K41 - SS REMOTE HOPPER DD SCREENS A9

ITEM NO.	QTY.	PART NUMBER	DESCRIPTION
1	2	20218	PULLEY BLOCK
2	1	23958-A9	WINCH,RATCHET,900 LBS
3	1	54205	KNOB, 1/2-20 THD'D.
4	8	28726	RETAINER,SNAP (SAFETY)
5	6	28727	PIN CLEVIS,3/8 X 1-1/2"
6	1	21824	CLAMP, 3/16" CABLE
7	1	523340	FRAME,SCRN,D-DN,A9-SS
8	1	523341	SCRN,RR,DD,RMT,A9-SS
9	1	523342	SCREEN,D-DN,FRONT,A9-SS
10	1	5215856	FILLER, SCREN, RH,A9-MS
11	1	5215857	FILLER,SCREEN,LH,A9-SS
12	1	523343	BRACKET,D-DN SCREENS,UPPER,SS
13	1	523344	BRACKET,MID,D-DN SCREENS,A9-SS
14	1	523351	BRACKET,MOUNT,WINCH,SS
15	22FT	29080-264	3/16" SS WIRE CABLE
16	1	21537	THIMBLE,1/4" CABLE
17	1	23977	5/8" X 2.25 CLEVIS PIN
18	1	24074	HAIRPIN COTTER, .148" DIA SST
19	1	29918	BLOCK AND SHEAVE

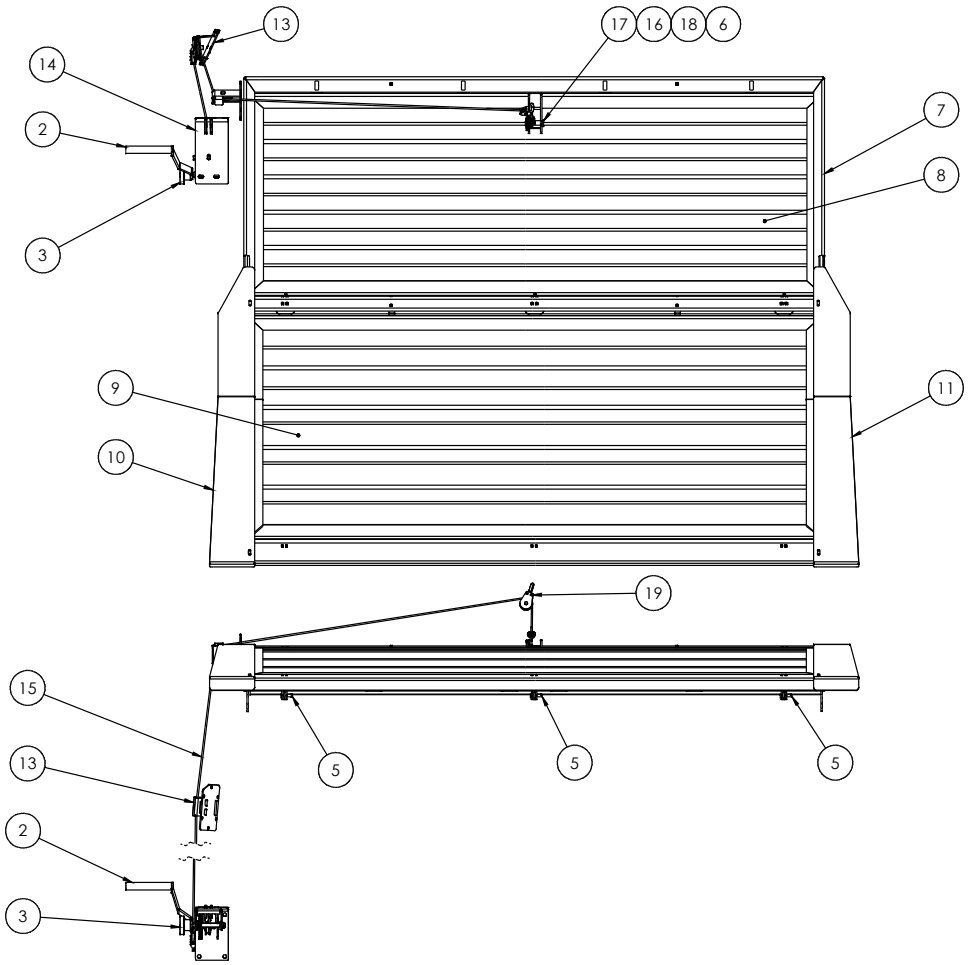

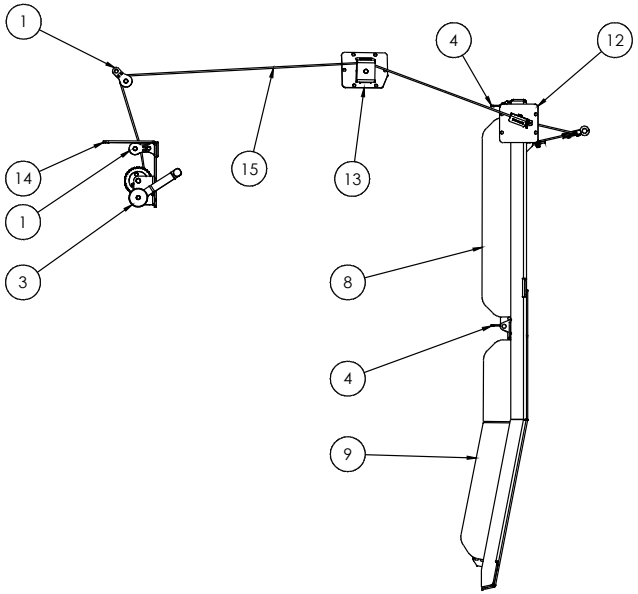

204V13 - HOPPER ASSY A9T E-A MS

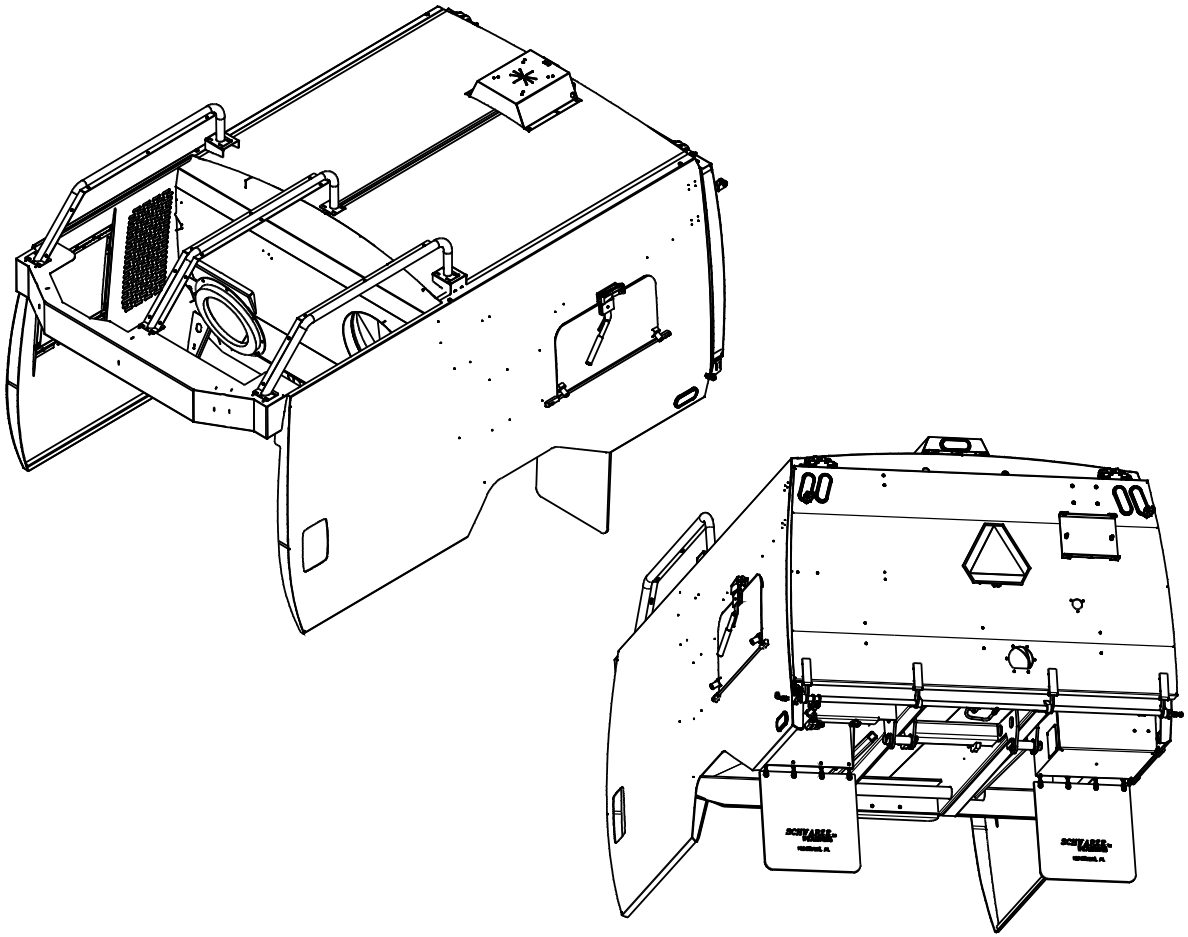

	ITEM NO.	PART NO.	QTY.	DESCRIPTION
	43	5218768	4	SPACER, HOPPER LATCH
	44	29138	1	T-HANDLE LATCH
	45	29148	2	BUMPER,RUBBER HOLLOW STEM
	46	5223920	1	HINGE, ENGINE DOOR, A9T
	47	525817	1	WELD, ENGINE DOOR, A SERIES
	48	67127	2	GAS SPRING, 28" EXT, GV
	49	67128	4	ROD END, BALL JOINT, M8
*	50	204W53	1	KIT,HOSE A9T DUMP DOOR ORFS

	ITEM NO.	PART NO.	QTY.	DESCRIPTION
	1	525895	1	HOPPER WELD, A9T, MS
	2	5215010	1	COVER,HOPPER TOOLBOX,A7000
	3	524920	1	WELD, SEPERATOR DOOR, A9
	4	204Q77	1	BRAKE LIGHT, REAR CENTER ASSY
	5	523156	1	TUBE HOPPER INTAKE BOLT-IN A7
	6	29494	1	SEAL,BOLT-IN INTAKE TUBE,A7000
	7	54310	1	SEAL,INTAKE,A7000 BOLT-IN INTAKE TUBE
	8	520311	2	HOPPER, MTG, PIN
	9	55625	2	LIGHT, 6.5" WIDE, RED LED
	10	5223342	2	DOOR, CYLINDER BOX, 3CR12
	11	5201914	1	HOPPER PROP LATCH HOOK, A7,
	12	523239	2	WELD, HINGE, D/D, A9-08
	13	203L86	1	HOPPER, DUMP DOOR ASSEMBLY, A9
	14	5214014	2	DUMP DOOR HINGE PIN
	15	23514	2	FITTING, 1/4-28 GREASE 90°
	16	5222213	2	WIRE COVER PLT,HOPPER,A9,3CR12
	17	204M27	2	CYLINDER, A9 DOOR ASSY, ORFS
	18	54710	4	3/4 X 2 CLEVIS PIN
	19	24029	2	MUDFLAP, 24 X 24 X 1/4
	20	20814-3	8	CHAIN,1/4" 3 LINKS
	21	5207106	1	MAT, TOOL BOX
	22	525111	1	ENGINE GUARD, MIDDLE WELD, A7
	23	525110	1	ENGINE GUARD, LH WELD, A7
	24	525112	1	ENGINE GUARD, RH WELD, A7
	25	204M29	1	VALVE, SEQUENCE A9 DOOR
	26	204W45	1	CYLINDER,DR LTCH C-BAL A7/A9
	27	204M66	1	HOPPR,TOOLBOX DR ASSY,A9,3CR12
	28	61704	1	TURCK PRX SWITCH & BRKT
	29	5222151	1	A9, PROX BRACKET, DOOR 3CR12
	30	5222150	1	A9,PROX SENSE PLATE,DOOR,3CR12
	31	28431	4	CLAMP, TOP 1/2" HARDLINE
	32	28432	8	CLAMP, 1/2" TUBE, HALVES, TWIN
	33	59875	2	GROMMET, OVAL 6"
	34	65462	2	TEE, 3/8" BULKHEAD MORFS
	35	66306	2	TEE,3/8" ORF SWIVEL NUT BRANCH
	36	22738	4	CLIP, 1-3/16" E
*	37	20212	2	3/8 JIC, SW-NUT, BR-TEE
*	38	21530	2	TEE, 3/8" JIC UNION BULKHEAD
*	39	29256	1	KIT, HOPPER WATER SYSTEM
	40	3001957	2	SPACER,HINGE, 1/4- A9-09
	41	3001958	2	SPACER,HINGE, 3/8- A9-09
	42	204M95	2	INSPECTION DOOR ASSY,CURB SIDE

* COMPONENTS NOT SHOWN

204V13 - HOPPER ASSY A9T E-A MS

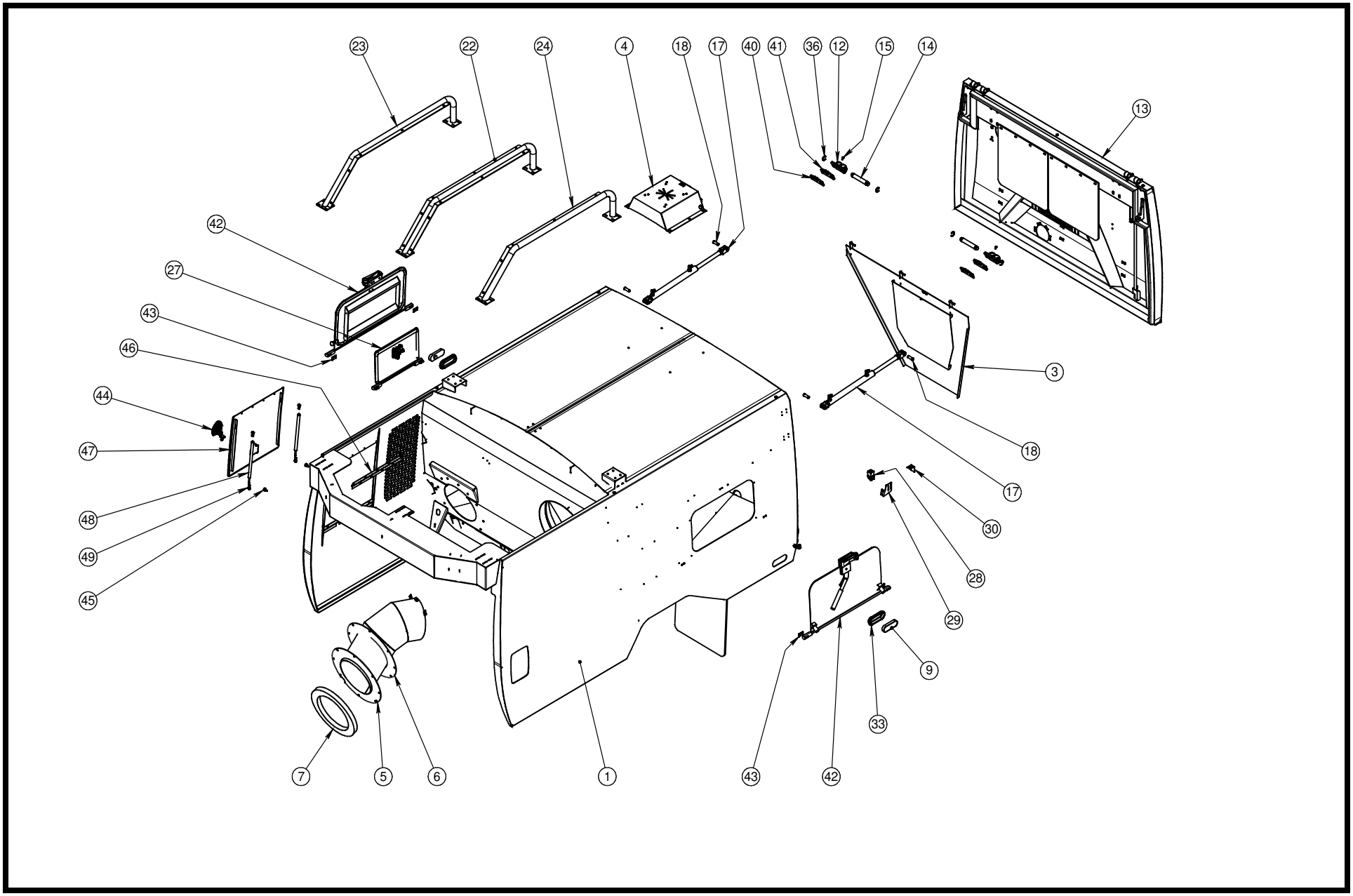

204V13 - HOPPER ASSY A9T E-A MS

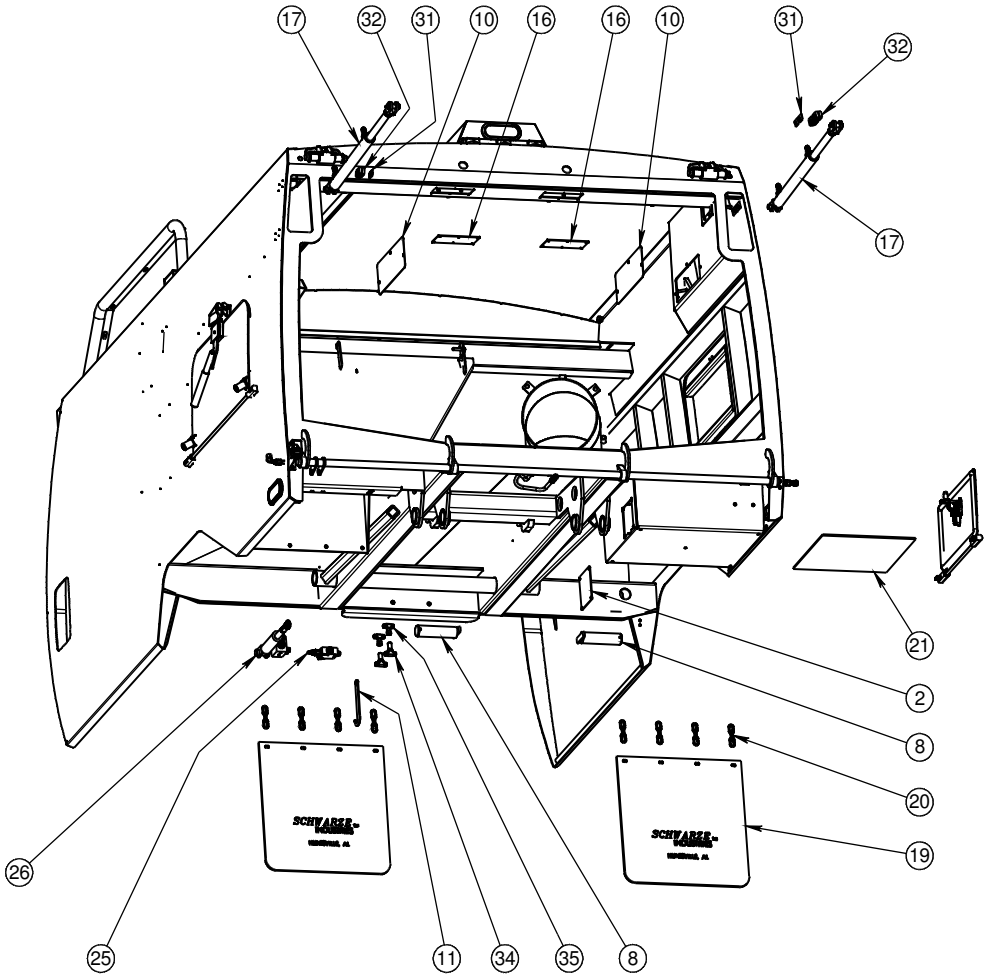

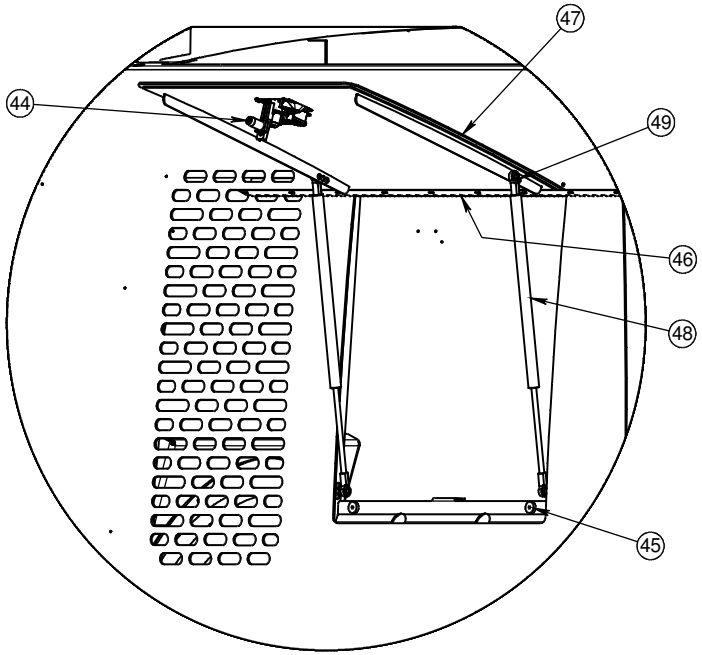

ENGINE ACCESS DOOR DETAIL

204Q77 - BRAKE LIGHT REAR CENTER

ITEM NO.	PART NUMBER	QTY.	DESCRIPTION
1	524095	1	HOPPER BEACON BRACKET, LED OVA
2	59875	1	GROMMET, OVAL 6"
3	55625	1	LIGHT, 6.5" WIDE, RED LED
4	62520	1	LIGHT, BAR RED. LED

ITEMS NOT SHOWN

ITEM NO.	PART NUMBER	QTY.	DESCRIPTION
5	28731	1	PIGTAIL, RED, WHITE, & BLACK
6	64596	1	CONNECTOR, 4 WAY RECEPTACLE
7	64612	1	WEDGELOCK, DT, 4POS RECEPT
8	20313	2	WIRE, 14 GA-RED
9	20311	2	WIRE, 14 GA-BLACK
10	21647	2	WIRE, 18 GA-ORANGE
11	20312	2	WIRE, 14 GA-BROWN

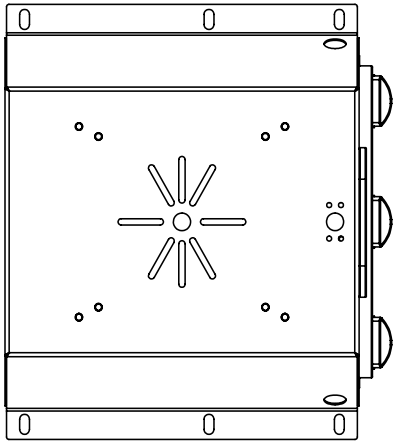

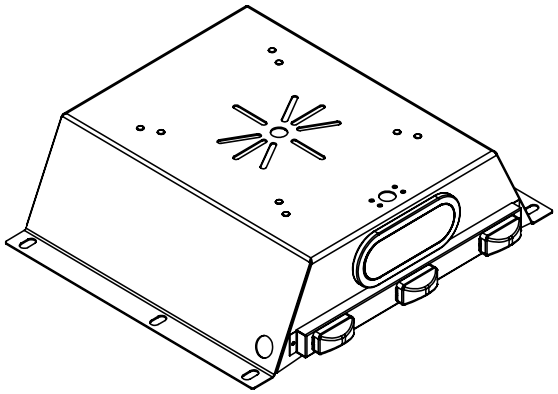

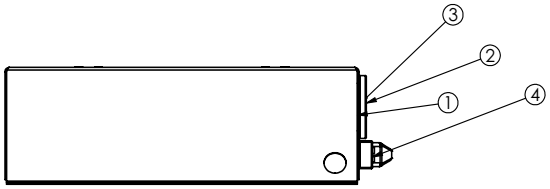

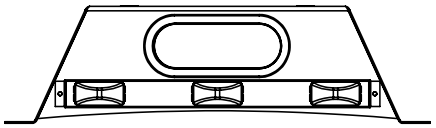

203L86 - HOPPER, DUMP DOOR ASSY, A9

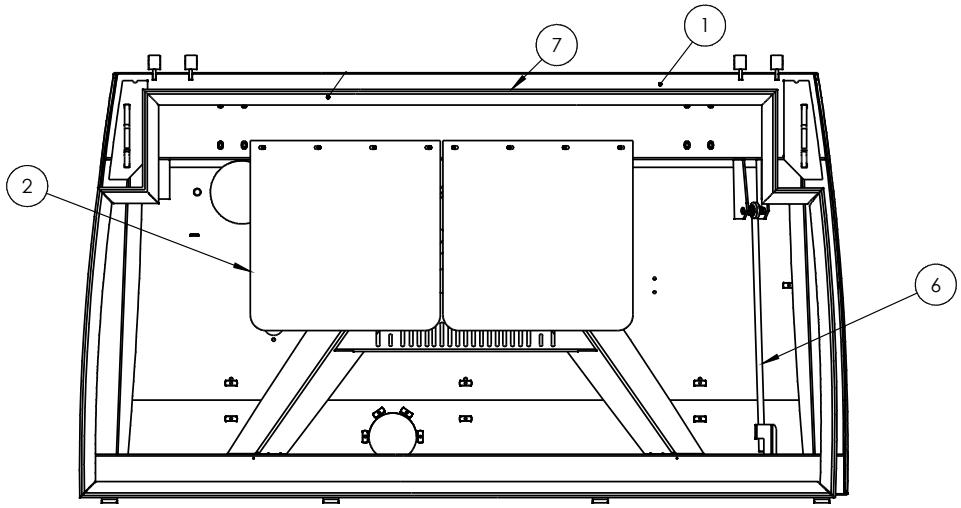

ITEM NO.	QTY.	PART NUMBER	DESCRIPTION
1	1	522866	HOPPER DUMP DOOR, A9T, A9000
2	2	24029	MUDFLAP, 24 X 24 X 1/4
3	1	5204419	HAND HOSE DOOR COVER
4	1	21456	SIGN,TRIANGLE WARNING
5	1	21428-30	SEAL MATERIAL,1/4 X 1-1/4,CUT TO 30"
6	1	523238	HOPPER DOOR PROP
7	1	64798	DOOR SEAL, A9T4 DUMP DOOR
8	4	59875	GROMMET, OVAL 6"
9	2	55625	LIGHT, 6.5" WIDE, RED LED
10	2	54209	LIGHT, 6.5" WIDE, AMBER, LED
*11	3	67175	ADH,RTV SILICONE,HIGH STRENGT

*ITEMS NOT SHOWN

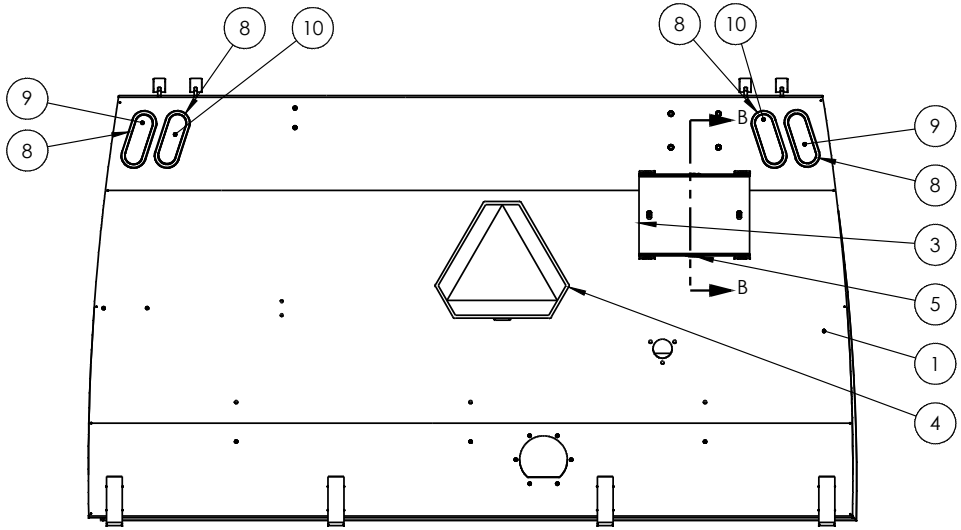

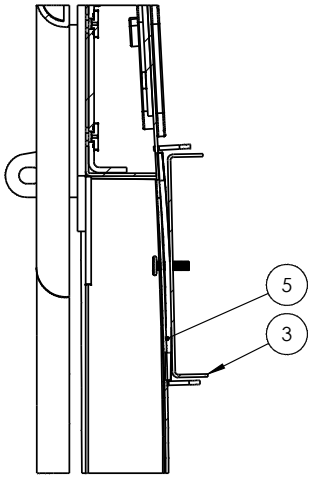

SECTION B-B

204M27 - CYLINDER, DOOR A9, ASSY, ORFS

ITEM NO.	PART NUMBER	DESCRIPTION	QTY.
1	29149	CYLINDER 1.5X17 A9000	1
2	61027	ELBOW, 90 3/8 MORFS X 3/8 MORB	2

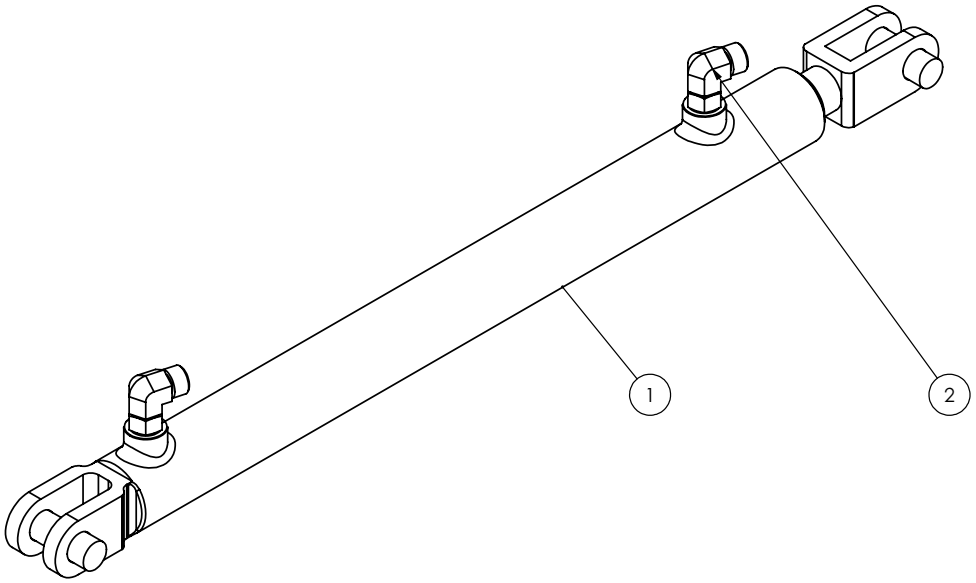

204W45 - CYLINDER,DR LTCH C-BAL

ITEM NO.	PART NUMBER	QTY.	DESCRIPTION
1	67782	1	CYLINDER, DOOR LATCH, 1.5 X 3
2	5207160	1	5/8-18 ROD END DRILLED & TAPPED
3	31876	1	NUT, 5/8-11 HEX JAM
4	60669	1	CLEVIS PIN, 1" DIA, 2" USABLE
5	61019	2	3/8" MORFS X 3/8" MORB

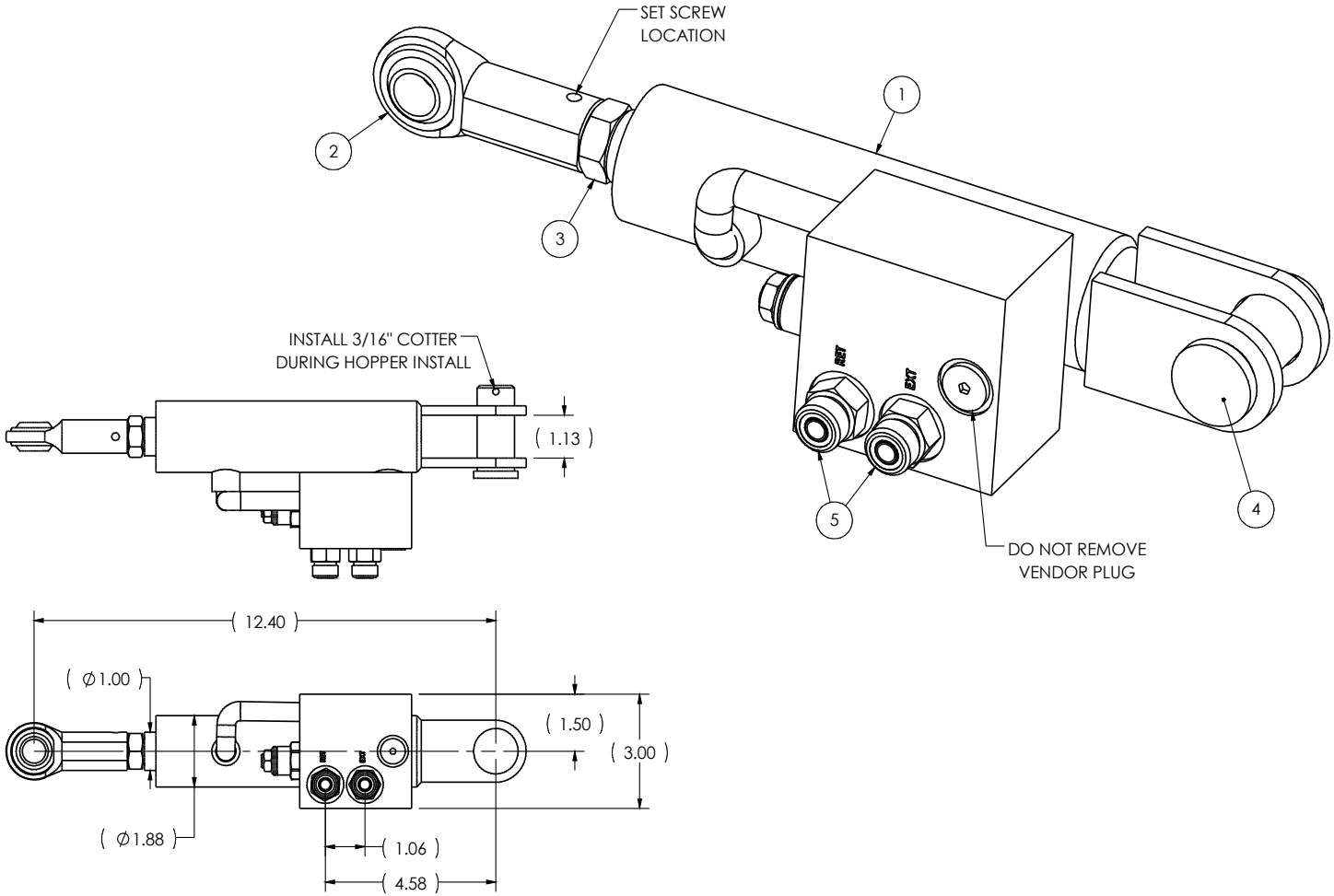

204M66 - HOPPER TOOLBOX DOOR, SS

ITEM NO.	Default/QTY.	PART NUMBER	DESCRIPTION
1	2	29279	ALUMINUM HINGE, LONG
2	1	29138	T-HANDLE LATCH
3	1	25947-65	SEAL MATERIAL, 65"
4	4	23890	3/8-16 X 1-1/4 SCHCS SS SCREW
5	4	23892	NUT,10-24 ,LOCK,SS
6	4	32132	#10-24 X 1/2 SS BUTTON SOCKET CAP SCREW
7	1	525284	DOOR,TOOLBOX, A9 3CR12

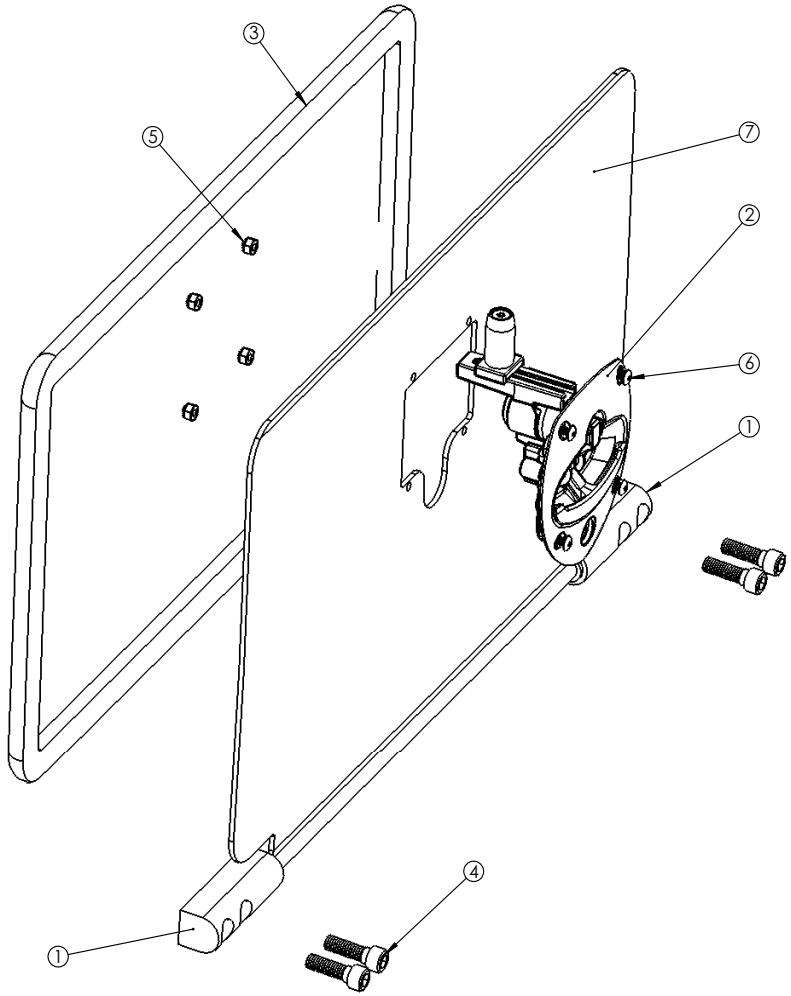

204M95 - HOPPER INSPECTION DOOR, CURB SIDE

ITEM NO.	PART NUMBER	DESCRIPTION	QTY.
1	525303	HOPPER,INSP DOOR WLMT,A7,3CR12	1
2	525307	LATCH HOUSING, CURB SIDE	1
3	5222279	LATCH PIVOT PIN	1
4	525310	LATCH ARM WELDMENT, CURB SIDE	1
5	525308	LATCHRECEIVER WLDMNT,CURB SIDE	1
6	29279	ALUMINUM HINGE, LONG	2
7	64745-97	SEAL D PROFILE EPDM 60	1
8	65398	DOOR HANDLE SAFETY COVER	1
9	29437	BUMPER,RUBBER 1.25 D X 1.875 L	2

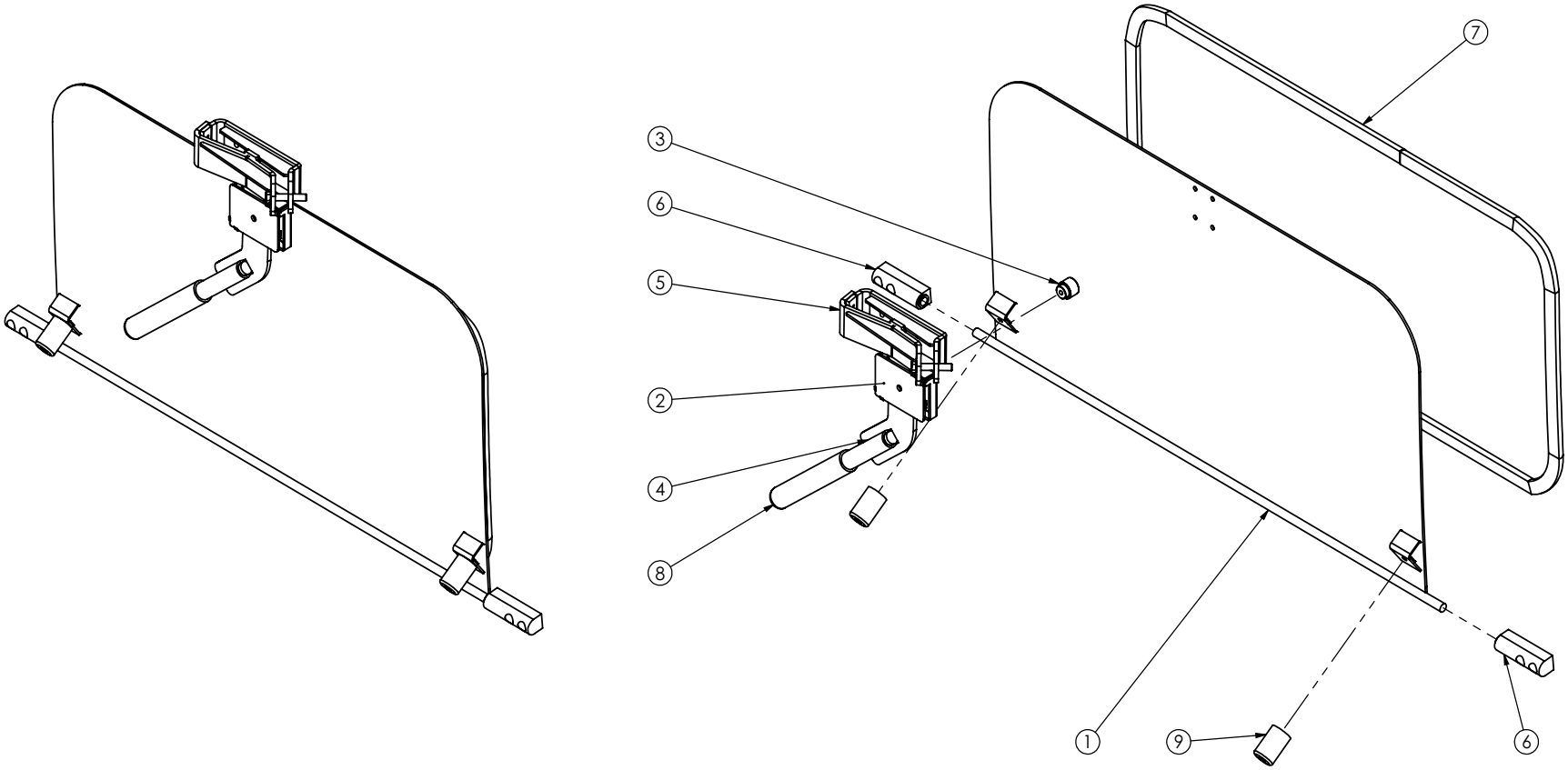

204M30 - HOPPER ASSY A9T MS T4F

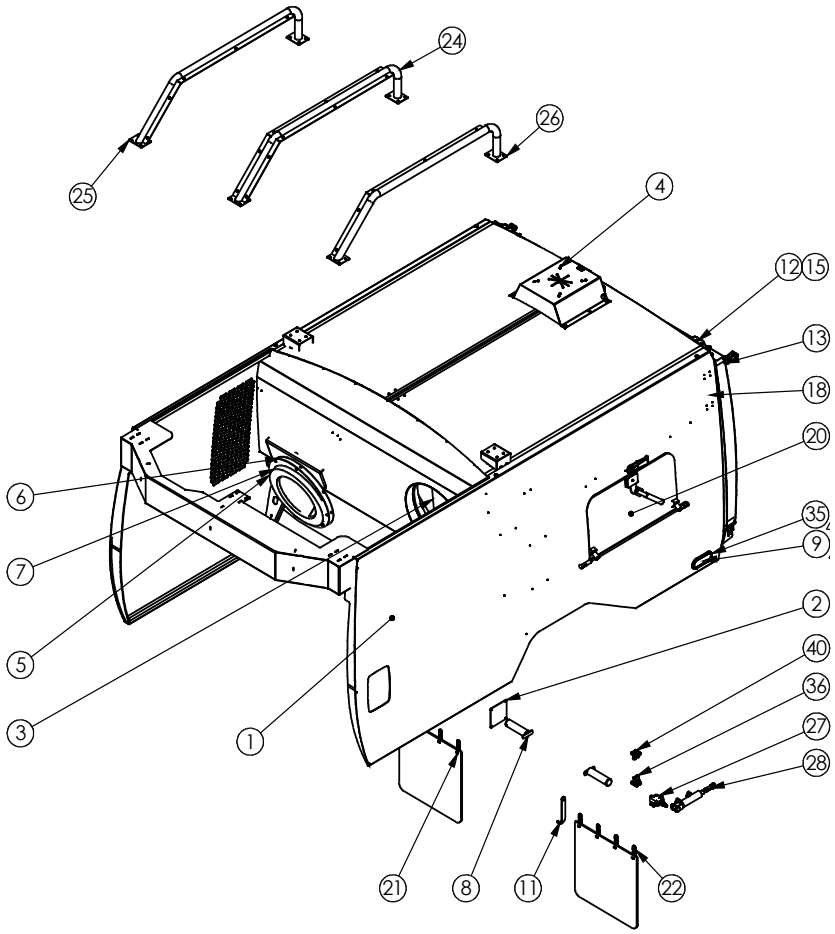

ITEM NO.	PART NUMBER	DESCRIPTION	QTY.
1	525233	HOPPER WELD, A9, T4F	1
2	5215010	COVER,HOPPER TOOLBOX,A7000	1
3	524920	WELD, SEPERATOR DOOR, A9	1
4	204Q77	BRAKE LIGHT, REAR CENTER ASSY	1
5	523156	TUBE HOPPER INTAKE BOLT-IN A7	1
6	29494	SEAL,BOLT-IN INTAKE TUBE,A7000	1
7	54310	SEAL,INTAKE,A7000 BOLT-IN INTAKE TUBE	1
8	520311	HOPPER, MTG, PIN	2
9	55625	LIGHT, 6.5" WIDE, RED LED	2
10	5223342	DOOR, CYLINDER BOX, 3CR12	2
11	5201914	HOPPER PROP LATCH HOOK, A7,	1
12	525054	WELD, SS HINGE, D/D, A9-08	2
13	203L86	HOPPER, DUMP DOOR ASSEMBLY, A9	1
14	5214014	DUMP DOOR HINGE PIN	2
15	23514	FITTING, 1/4-28 GREASE 90°	2
16	5222213	WIRE COVER PLT,HOPPER,A9,3CR12	2
17	204M27	CYLINDER, A9 DOOR ASSY, ORFS	2
18	54710	3/4 X 2 CLEVIS PIN	4
19	204M95	INSPECTION DOOR ASSY,CURB SIDE	1
20	204M94	INSPECTION DOOR ASSY,ROAD SIDE	1
21	24029	MUDFLAP, 24 X 24 X 1/4	2
22	20814-3	CHAIN,1/4" 3 LINKS	8
23	5207106	MAT, TOOL BOX	1
24	525111	ENGINE GUARD, MIDDLE WELD, A7	1
25	525110	ENGINE GUARD, LH WELD, A7	1
26	525112	ENGINE GUARD, RH WELD, A7	1
27	204M29	VALVE, SEQUENCE A9 DOOR	1
28	204R38	CYLINDER, HOPPER DOOR LATCH	1
29	204M66	HOPPR,TOOLBOX DR ASSY,A9,3CR12	1
30	61704	TURCK PRX SWITCH & BRKT	1
31	5222151	A9, PROX BRACKET, DOOR 3CR12	1
32	5222150	A9,PROX SENSE PLATE,DOOR,3CR12	1
33	28431	CLAMP, TOP 1/2" HARDLINE	4
34	28432	CLAMP, 1/2" TUBE, HALVES, TWIN	8
35	59875	GROMMET, OVAL 6"	2
36	65462	TEE, 3/8" BULKHEAD MORFS	2
37	3001957	SPACER,HINGE, 1/4- A9-09	2
38	22738	CLIP, 1-3/16" E	4
39	3001958	SPACER,HINGE, 3/8- A9-09	2
40	66306	TEE,3/8" ORF SWIVEL NUT BRANCH	2

ITEMS BELOW NOT SHOWN

ITEM NO.	PART NUMBER	DESCRIPTION	QTY.
41	5218768	SPACER, HOPPER LATCH	1
42	20212	3/8 JIC, SW-NUT, BR-TEE	2
43	21530	TEE, 3/8" JIC UNION BULKHEAD	2
44	29256	KIT, HOPPER WATER SYSTEM	1
45	204M28	KIT, HOSE, A9 DUMP DOOR, ORFS	1

204M30 - HOPPER ASSY A9T MS T4F

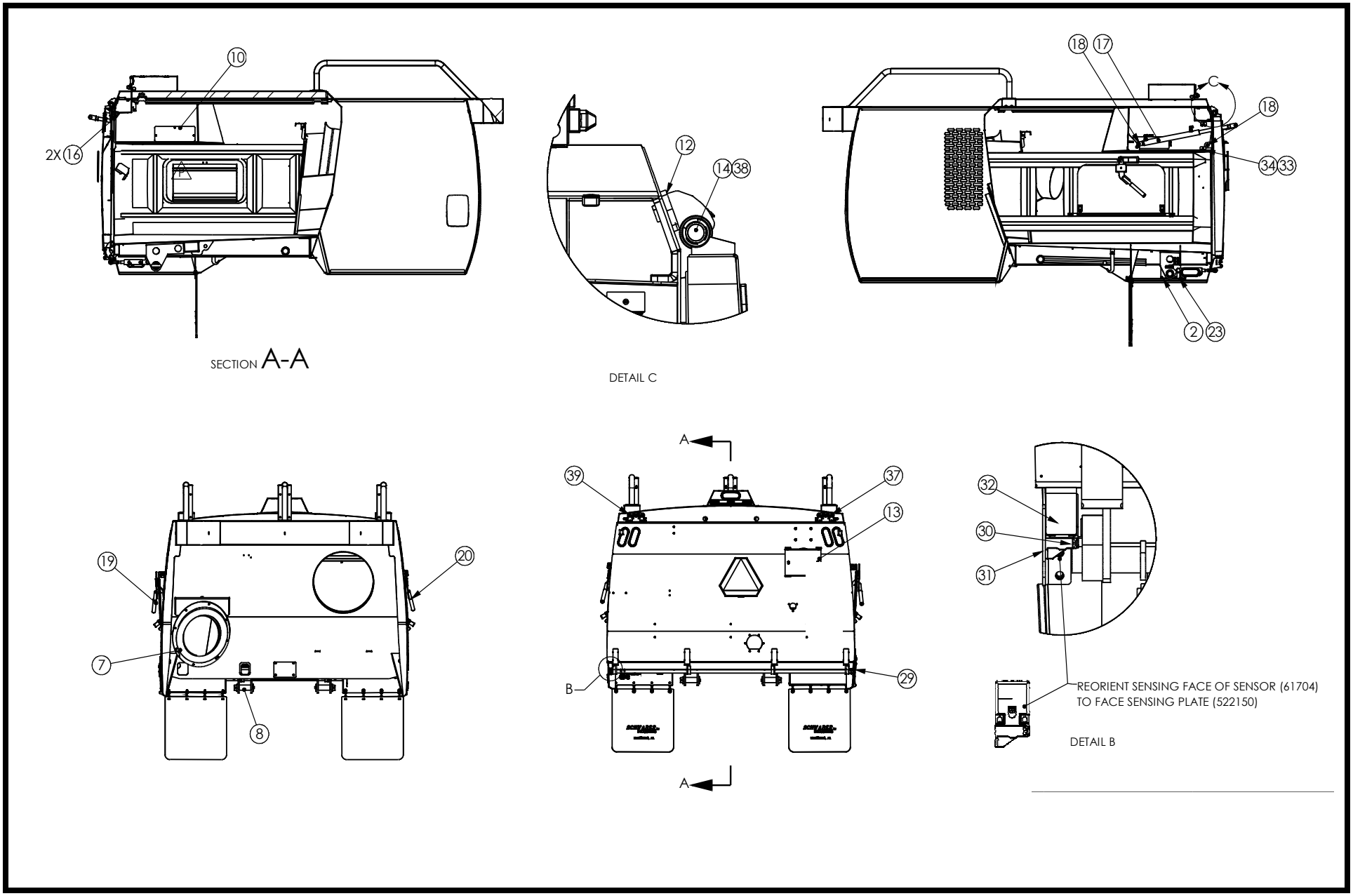

204M94 - HOPPER INSPECTION DOOR, ROAD SIDE

ITEM NO.	PART NUMBER	DESCRIPTION	QTY.
1	525303	HOPPER,INSP DOOR WLMT,A7,3CR12	1
2	525296	LATCH HOUSING, ROAD SIDE	1
3	5222279	LATCH PIVOT PIN	1
4	525301	LATCH ARM WELDMENT, ROAD SIDE	1
5	525302	LATCHRECEIVER WLDMNT,ROAD SIDE	1
6	29279	ALUMINUM HINGE, LONG	2
7	64745-97	SEAL D PROFILE EPDM 60	1
8	65398	DOOR HANDLE SAFETY COVER	1
9	29437	BUMPER,RUBBER 1.25 D X 1.875 L	2

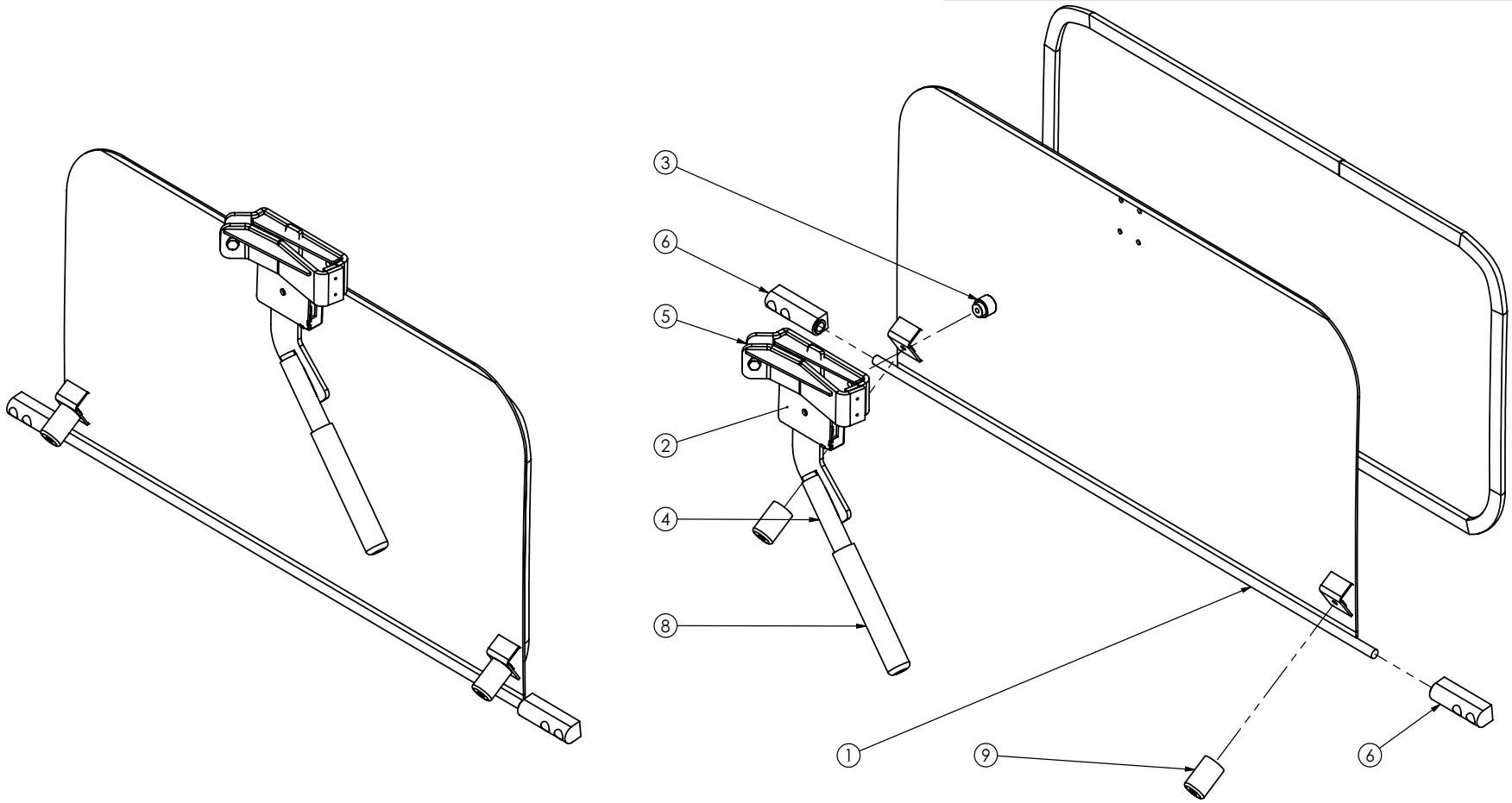

204R38 - CYLINDER, HOPPER DOOR LATCH

ITEM NO.	PART NUMBER	DESCRIPTION	QTY.
1	520939	HOPPER DOOR LATCH CYLINDER	1
2	5207160	5/8-18 ROD END DRILLED & TAPPED	1
3	31876	NUT, 5/8-11 HEX JAM	1
4	65765	ELBOW, 90° 3/8 MORFS X 1/4 NPT	2
5	60669	CLEVIS PIN, 1" DIA, 2" USABLE	1

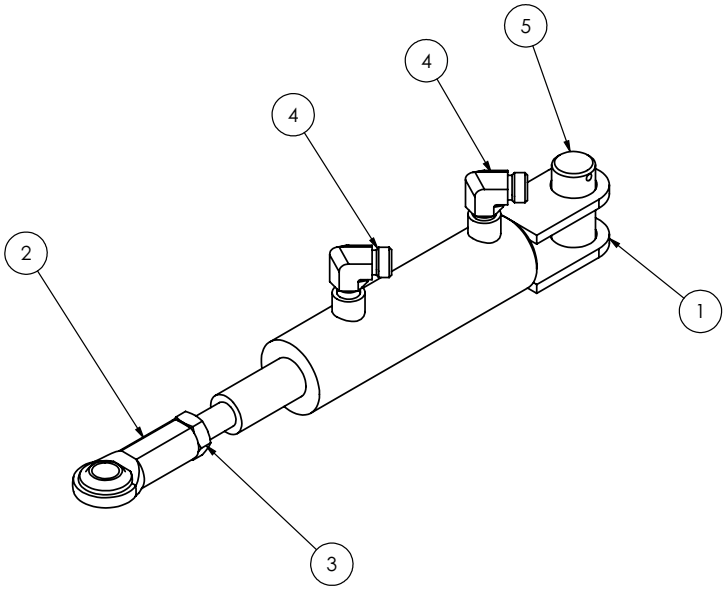

204J81 - HOPPER, SS

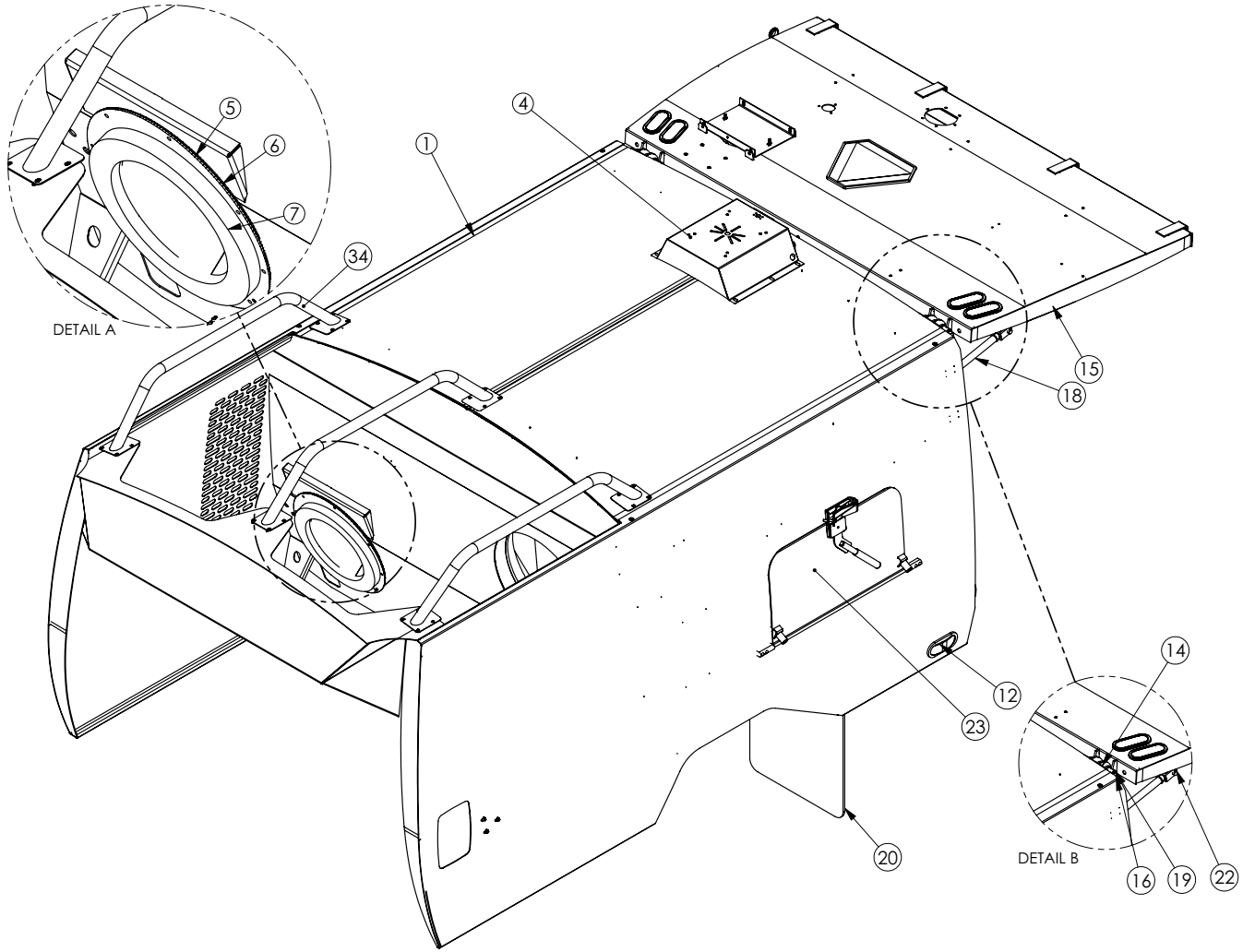

ITEM NO.	PART NUMBER	DESCRIPTION	QTY.
1	524976	WELDMENT HOPPER A9 SS T4I	1
2	5215866	COVER,HOPPER TOOLBOX,A9000-SS	1
3	524921	WELD, SEPERATOR DOOR, A9, SS	1
4	203Z21	BRAKE LIGHT, REAR CENTER ASSY	1
5	523156	TUBE HOPPER INTAKE BOLT-IN A7	1
6	29494	SEAL,BOLT-IN INTAKE TUBE,A7000	1
7	54310	SEAL,INTAKE,A7000 BOLT-IN INTAKE TUBE	1
8	203L84	HOPPER,DUMP DOOR LOCK CYLINDER	1
9	520311	HOPPER, MTG, PIN	2
10	5207106	MAT, TOOL BOX	1
11	29437	BUMPER,RUBBER 1.25 D X 1.875 L	1
12	21980	LAMP,KIT RED SEALED GRMT	2
13	5201914	HOPPER PROP LATCH HOOK, A7,	1
14	525054	WELD, SS HINGE, D/D, A9-08	2
15	203L95	HOPPER, DUMP DOOR ASSY, SS	1
16	5214014	DUMP DOOR HINGE PIN	2
17	5222213	WIRE COVER PLT,HOPPER,A9,3CR12	2
18	203L85	HOPPER, DUMP DOOR CYLINDER	2
19	22738	CLIP, 1-3/16" E	4
20	24029	MUDFLAP, 24 X 24 X 1/4	2
21	20814-3	CHAIN,1/4" 3 LINKS	8
22	54710	3/4 X 2 CLEVIS PIN	4
23	204M94	INSPECTION DOOR ASSY,ROAD SIDE	1
24	204M95	INSPECTION DOOR ASSY,CURB SIDE	1
25	28432	CLAMP, 1/2" TUBE, HALVES, TWIN	8
26	28431	CLAMP, TOP 1/2" HARDLINE	4
27	23873	FITTING, 1/4-28 TAPER THR STR	2
28	203G42	SPRAY TIP ASSEMBLY,A7000 HOPP	2
29	23514	FITTING, 1/4-28 GREASE 90°	2
30	3001957	SPACER,HINGE, 1/4- A9-09	2
31	3001958	SPACER,HINGE, 3/8- A9-09	2
32	5223342	DOOR, CYLINDER BOX, 3CR12	2
33	204M66	HOPPR,TOOLBOX DR ASSY,A9,3CR12	1
34	523794	HOPPER LIMB GUARD TUBE	3

ITEMS BELOW NOT SHOWN

ITEM NO.	PART NUMBER	DESCRIPTION	QTY.
35	21530	TEE, 3/8" JIC UNION BULKHEAD	2
36	20212	3/8 JIC, SW-NUT, BR-TEE	2
37	29188	KIT,A9 DUMP DOOR	1
38	23402	GROMMET,1.5" I.D. X 2.125" O.D.	3
39	20122	RUBBER SWITCH BOOT	3
40	66154	DECAL, HOPPER LIFETIME WARRANT	1
41	28633	CLAMP, MUFFLER 2 1/4 U-BOLT	1
42	29256	KIT, HOPPER WATER SYSTEM	1
43	28107	2 PRONG PIGTAIL	2
44	23128	FITTING,GREASE 45° 1/4-28 NPT	2
45	203440	INDICATOR LIGHT, LOAD WEIGHT	1
46	20141	FEMALE TEE, ECONO NPTF, 1/4"	1
47	22267	CLIP,3/4" E	4
48	204F28	HOPPER HOSE KIT A7-A9	1

204J81 - HOPPER, SS

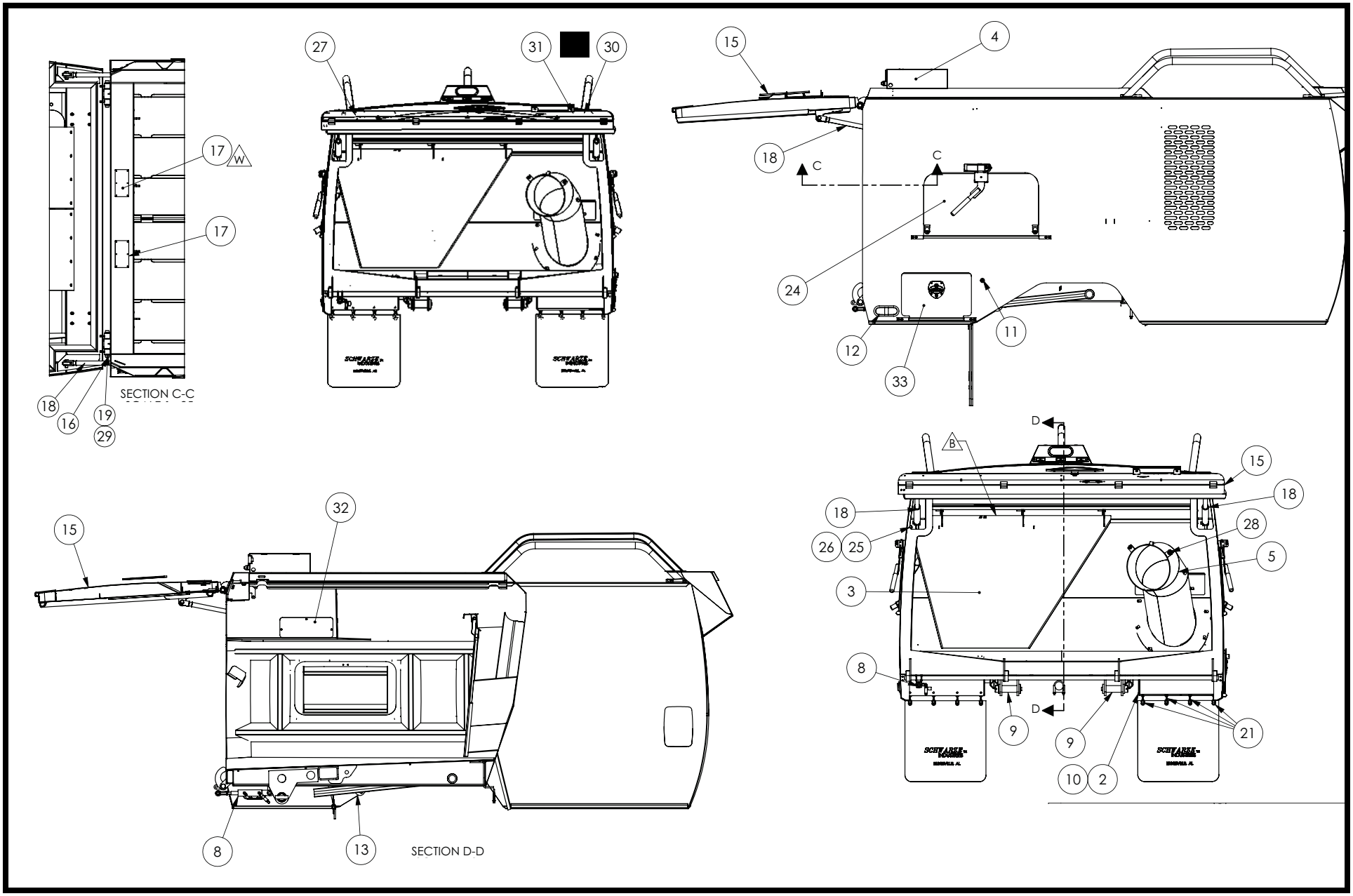

203L95 - HOPPER DUMP DOOR, SS

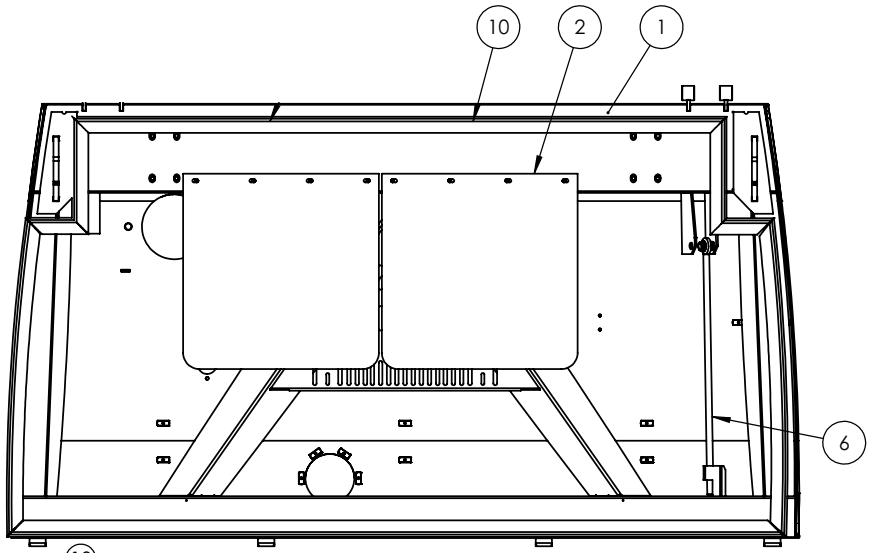

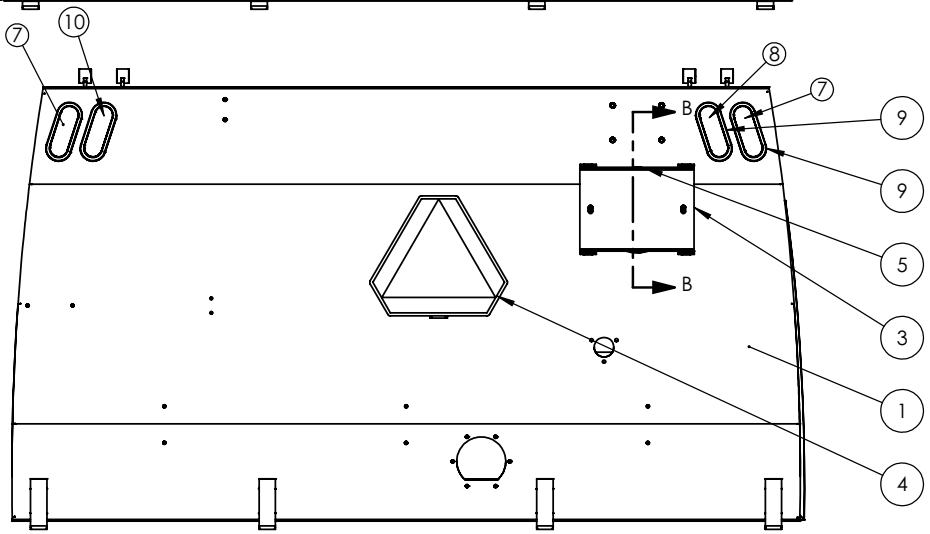

ITEM NO.	QTY.	PART NUMBER	DESCRIPTION
1	1	523330	DUMP DOOR, SS, A9000
2	2	24029	MUDFLAP, 24 X 24 X 1/4
3	1	5204419	HAND HOSE DOOR COVER
4	1	21456	SIGN,TRIANGLE WARNING
5	1	21428-30	SEAL MATERIAL,1/4 X 1-1/4,CUT TO 30"
6	1	523356	ASSY,ROD,PROP,A9000-SS
7	2	55625	LIGHT, 6.5" WIDE, RED LED
8	2	54209	LIGHT, 6.5" WIDE, AMBER, LED
9	4	59875	GROMMET, OVAL 6"
10	1	64798	DOOR SEAL, A9T4 DUMP DOOR

*ITEMS NOT SHOWN

ITEM NO.	QTY.	PART NUMBER	DESCRIPTION
*10	3	67175	ADH, RTV SILICONE, HIGH STRENGTH

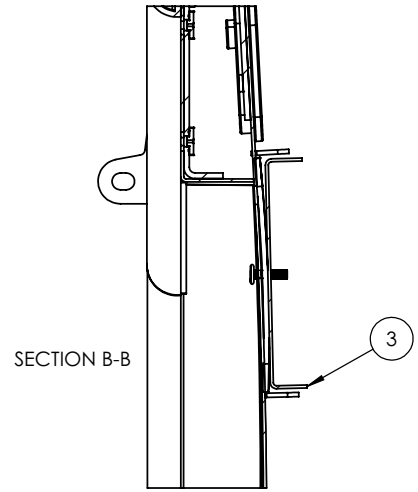

203L84 - CYLINDER, DUMP DOOR LOCK

ITEM NO.	PART NUMBER	QTY.	DESCRIPTION
1	20930	1	CYLINDER,2 X 7,DUMP DOOR
2	20194	2	1/4 NPT X 3/8 JIC 90° ELBOW

ITEMS BELOW NOT SHOWN

ITEM NO.	PART NUMBER	QTY.	DESCRIPTION
3	27124	2	+27829-176, +20205, +55027
4	27147	2	+27829-19, +20205, +20205
5	27806	2	+27829-115, +21030, +26924

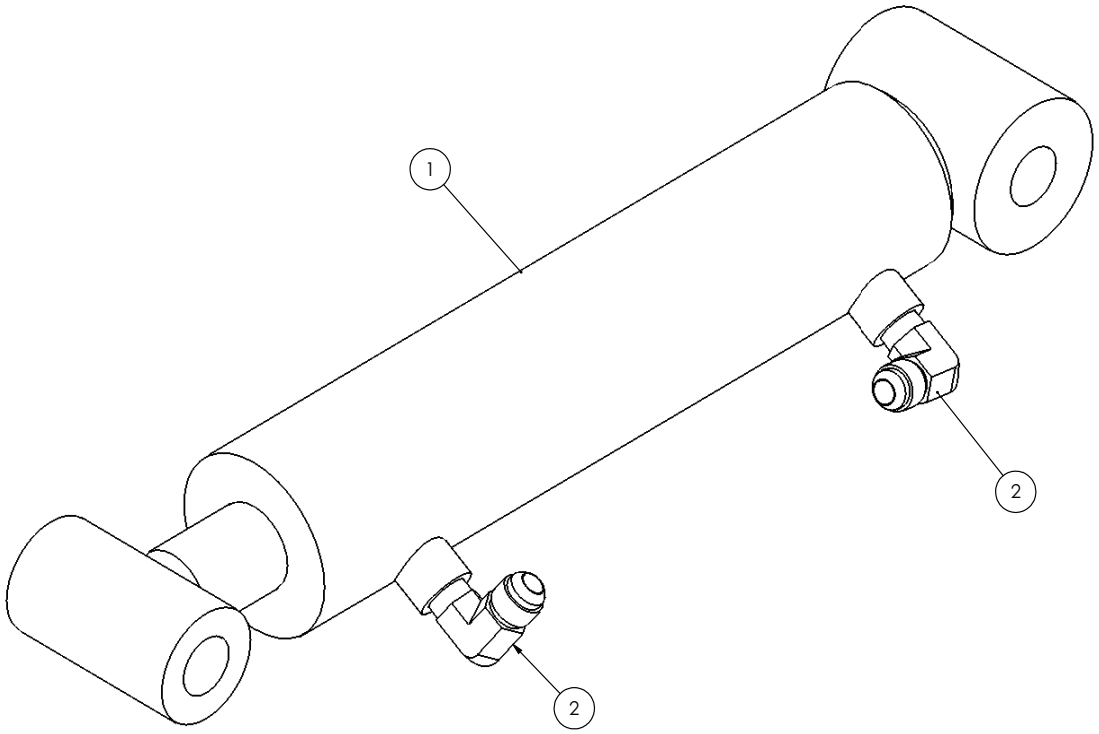

203L85 - CYLINDER, DUMP DOOR

ITEM NO.	QTY.	PART NUMBER	DESCRIPTION
1	1	29149	CYLINDER 1.5X17 A9000
2	2	21922	ELBOW,90,-6 MSAE TO -6 MJIC

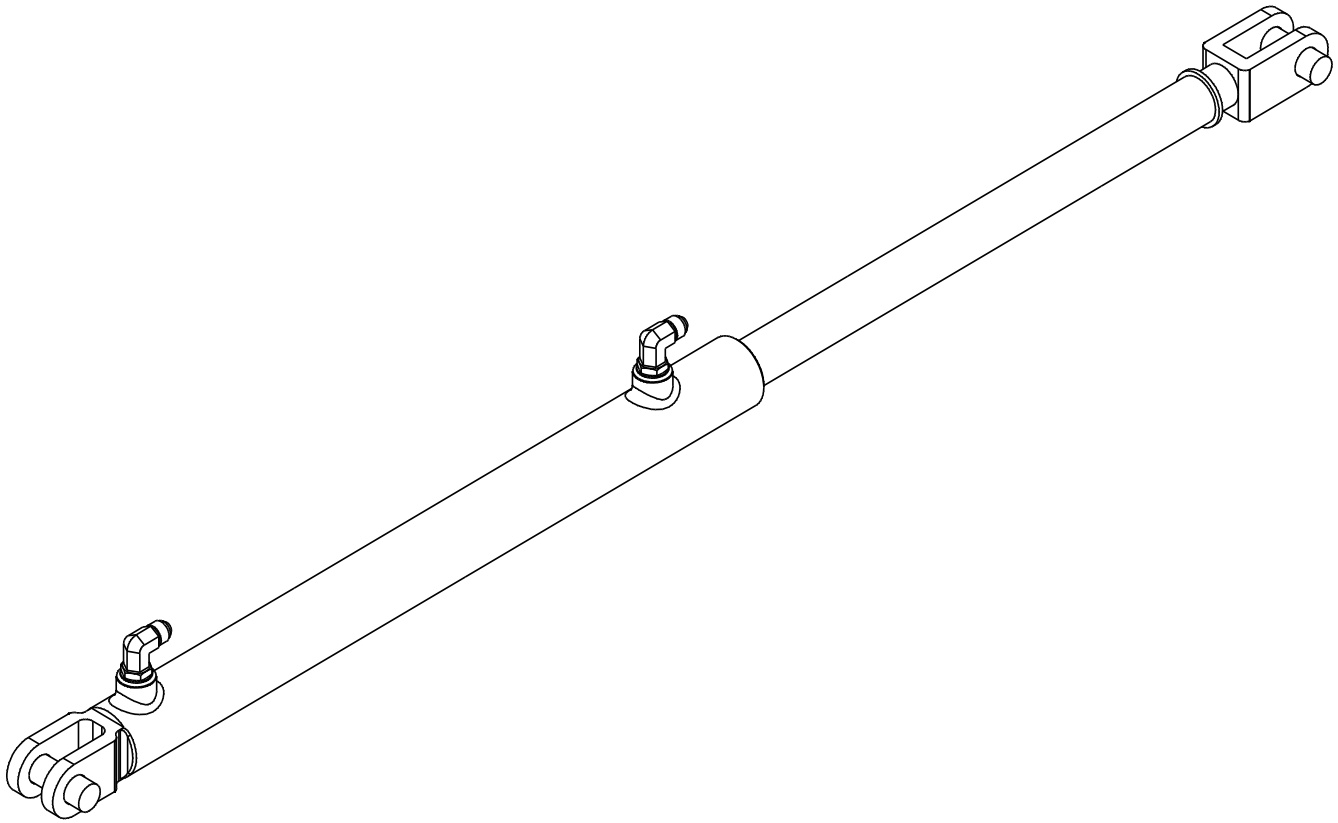

204V14 - HOPPER ASSY A9T E-A 304SS

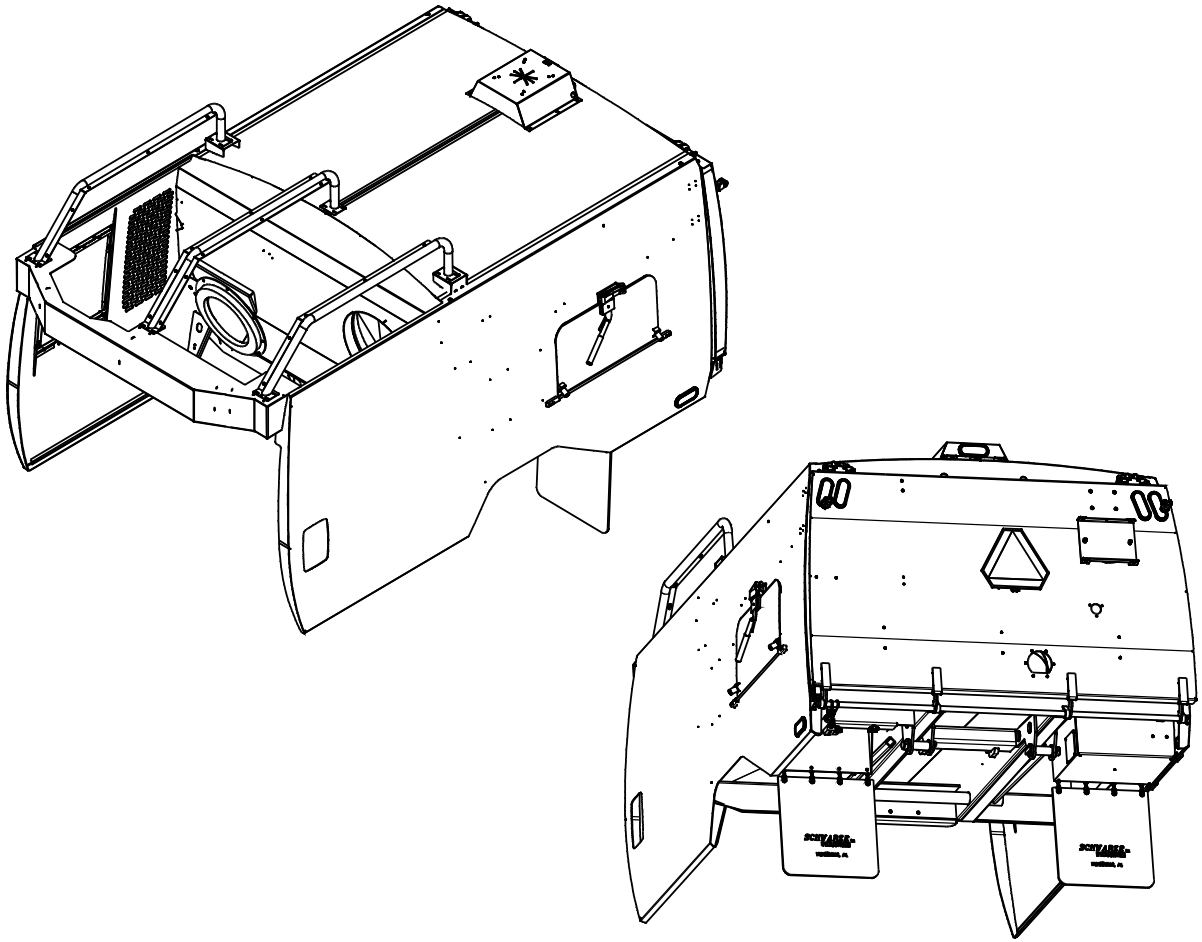

	ITEM NO.	PART NO.	QTY.	DESCRIPTION
	44	29138	1	T-HANDLE LATCH
	45	29148	2	BUMPER,RUBBER HOLLOW STEM
	46	5223920	1	HINGE, ENGINE DOOR, A9T
	47	525817	1	WELD, ENGINE DOOR, A SERIES
	48	67127	2	GAS SPRING, 28" EXT, GV
	49	67128	4	ROD END, BALL JOINT, M8
*	50	204W53	1	KIT,HOSE A9T DUMP DOOR ORFS

	ITEM NO.	PART NO.	QTY.	DESCRIPTION
	1	525896	1	HOPPER WELD, A9T, 304SS
	2	5215010	1	COVER,HOPPER TOOLBOX,A7000
	3	524920	1	WELD, SEPERATOR DOOR, A9
	4	204Q76	1	BRAKE LIT,REAR CNTR,3CR12
	5	523156	1	TUBE HOPPER INTAKE BOLT-IN A7
	6	29494	1	SEAL,BOLT-IN INTAKE TUBE,A7000
	7	54310	1	SEAL,INTAKE,A7000 BOLT-IN INTAKE TUBE
	8	520311	2	HOPPER, MTG, PIN
	9	55625	2	LIGHT, 6.5" WIDE, RED LED
	10	5223342	2	DOOR, CYLINDER BOX, 3CR12
	11	5201914	1	HOPPER PROP LATCH HOOK, A7,
	12	523239	2	WELD, HINGE, D/D, A9-08
	13	203L95	1	HOPPER, DUMP DOOR ASSY, SS
	14	5214014	2	DUMP DOOR HINGE PIN
	15	23514	2	FITTING, 1/4-28 GREASE 90°
	16	5222213	2	WIRE COVER PLT,HOPPER,A9,3CR12
	17	204M27	2	CYLINDER, A9 DOOR ASSY, ORFS
	18	54710	4	3/4 X 2 CLEVIS PIN
	19	24029	2	MUDFLAP, 24 X 24 X 1/4
	20	20814-3	8	CHAIN,1/4" 3 LINKS
	21	5207106	1	MAT, TOOL BOX
	22	525111	1	ENGINE GUARD, MIDDLE WELD, A7
	23	525110	1	ENGINE GUARD, LH WELD, A7
	24	525112	1	ENGINE GUARD, RH WELD, A7
	25	204M29	1	VALVE, SEQUENCE A9 DOOR
	26	204W45	1	CYLINDER,DR LTCH C-BAL A7/A9
	27	204M66	1	HOPPR,TOOLBOX DR ASSY,A9,3CR12
	28	61704	1	TURCK PRX SWITCH & BRKT
	29	5222151	1	A9, PROX BRACKET, DOOR 3CR12
	30	5222150	1	A9,PROX SENSE PLATE,DOOR,3CR12
	31	28431	4	CLAMP, TOP 1/2" HARDLINE
	32	28432	8	CLAMP, 1/2" TUBE, HALVES, TWIN
	33	59875	2	GROMMET, OVAL 6"
	34	65462	2	TEE, 3/8" BULKHEAD MORFS
	35	66306	2	TEE,3/8" ORF SWIVEL NUT BRANCH
	36	22738	4	CLIP, 1-3/16" E
*	37	20212	2	3/8 JIC, SW-NUT, BR-TEE
*	38	21530	2	TEE, 3/8" JIC UNION BULKHEAD
*	39	29256	1	KIT, HOPPER WATER SYSTEM
	40	3001957	2	SPACER,HINGE, 1/4- A9-09
	41	3001958	2	SPACER,HINGE, 3/8- A9-09
	42	204M95	2	INSPECTION DOOR ASSY,CURB SIDE
	43	5221953	4	SPCR, HOP LATCH, A7T, 3CR12

* COMPONENTS NOT SHOWN

204V14 - HOPPER ASSY A9T E-A 304SS

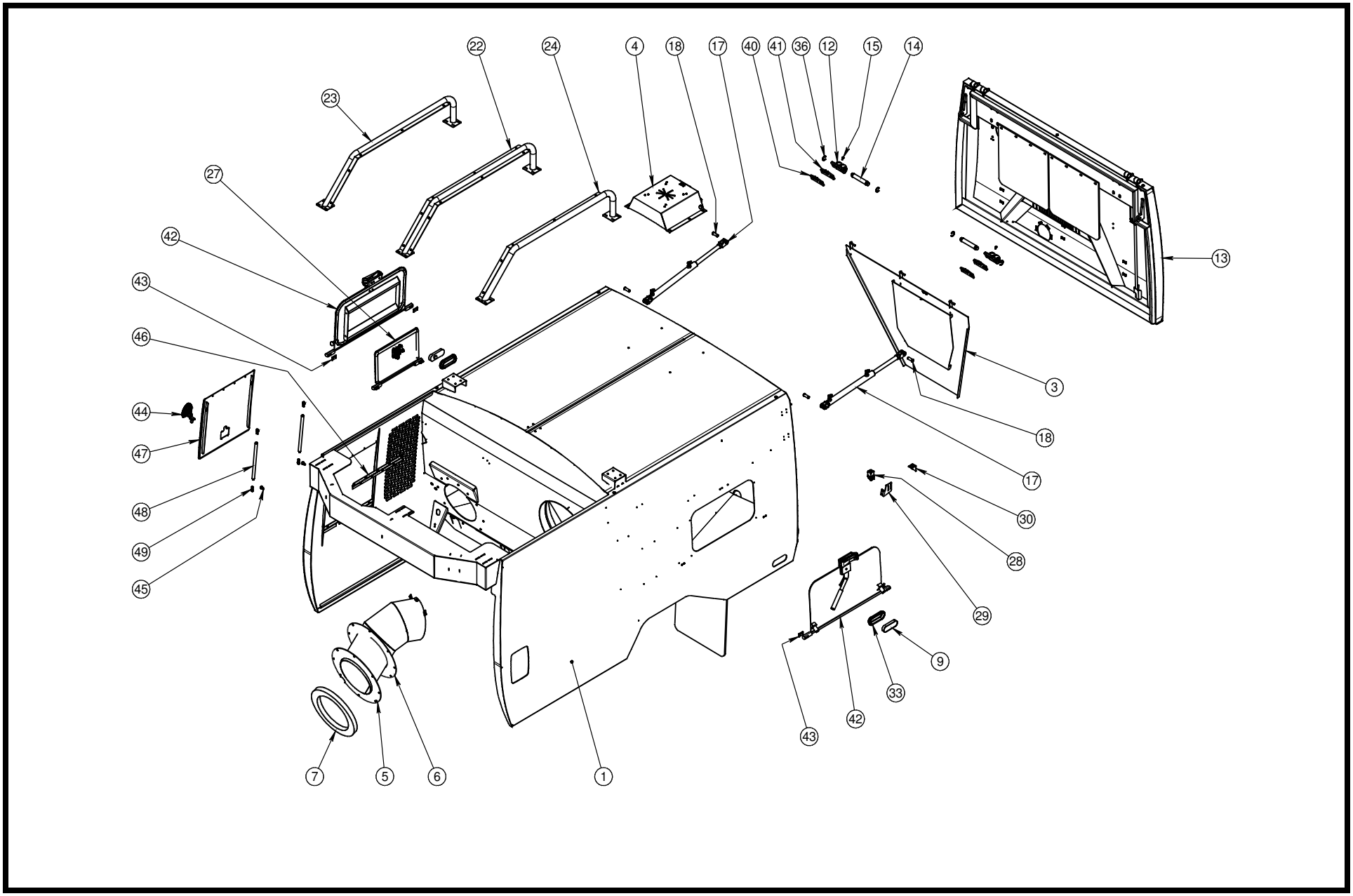

204V14 - HOPPER ASSY A9T E-A 304SS

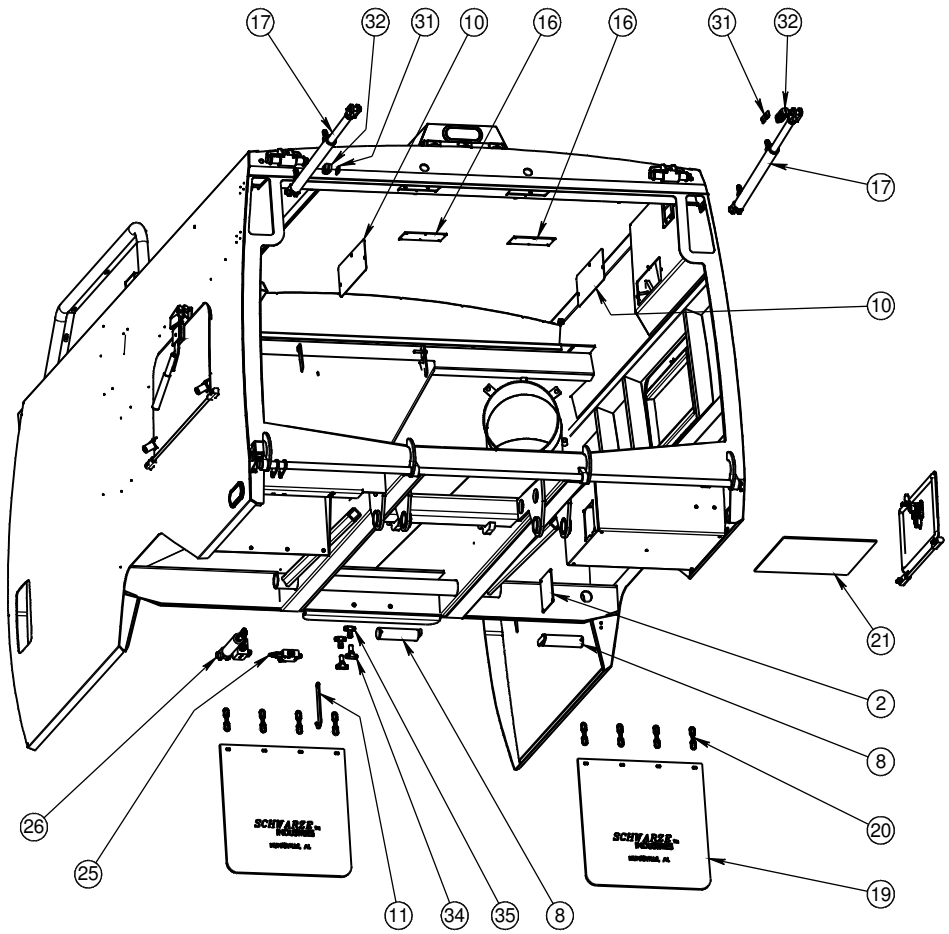

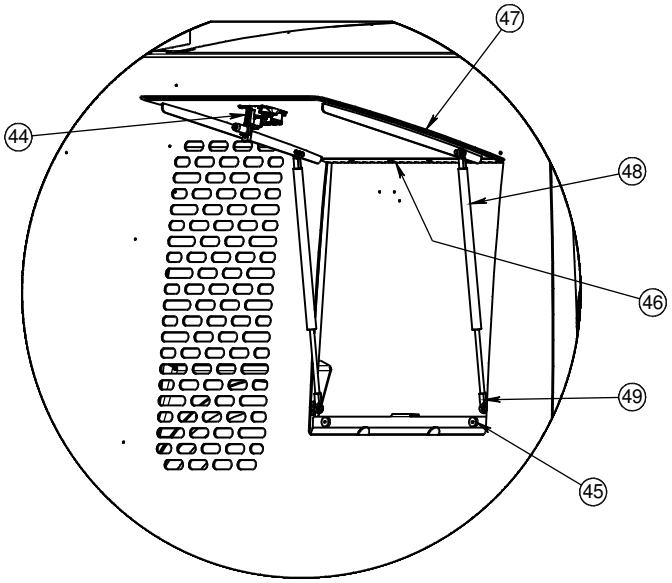

ENGINE ACCESS DOOR DETAIL

204Q76 - BRAKE LIT,REAR CNTR, 3CR12

ITEM NO.	PART NUMBER	QTY.	DESCRIPTION
1	525148	1	HOP BCN BRKT,LED OVL,A7T,3CR12
2	59875	1	GROMMET, OVAL 6"
3	55625	1	LIGHT, 6.5" WIDE, RED LED
4	62520	1	LIGHT, BAR RED. LED

ITEMS NOT SHOWN

ITEM NO.	PART NUMBER	QTY.	DESCRIPTION
5	28731	1	PIGTAIL, RED, WHITE, & BLACK
6	64596	1	CONNECTOR, 4 WAY RECEPTACLE
7	64612	1	WEDGELOCK, DT, 4POS RECEPT
8	20313	2	WIRE, 14 GA-RED
9	20311	2	WIRE, 14 GA-BLACK
10	21647	2	WIRE, 18 GA-ORANGE
11	20312	2	WIRE, 14 GA-BROWN

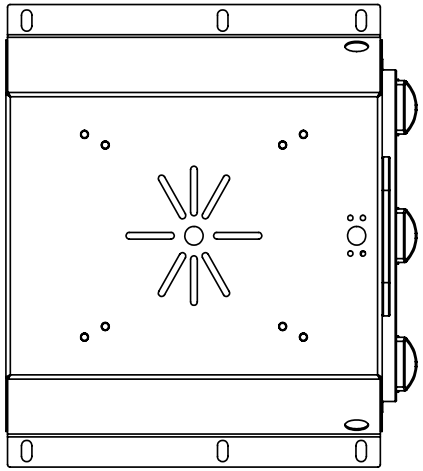

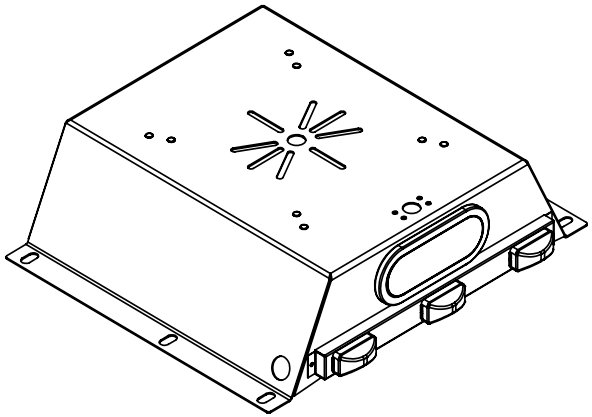

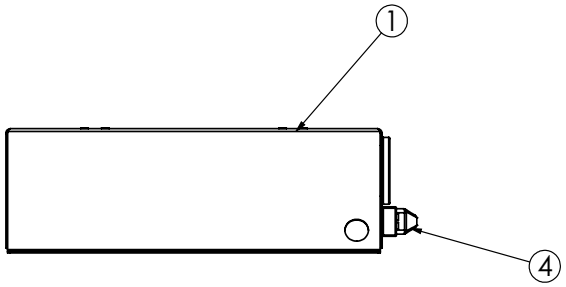

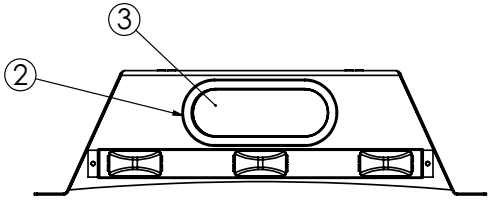

204M88 - HOPPER ASSY, A9T, 3CR12, T4F

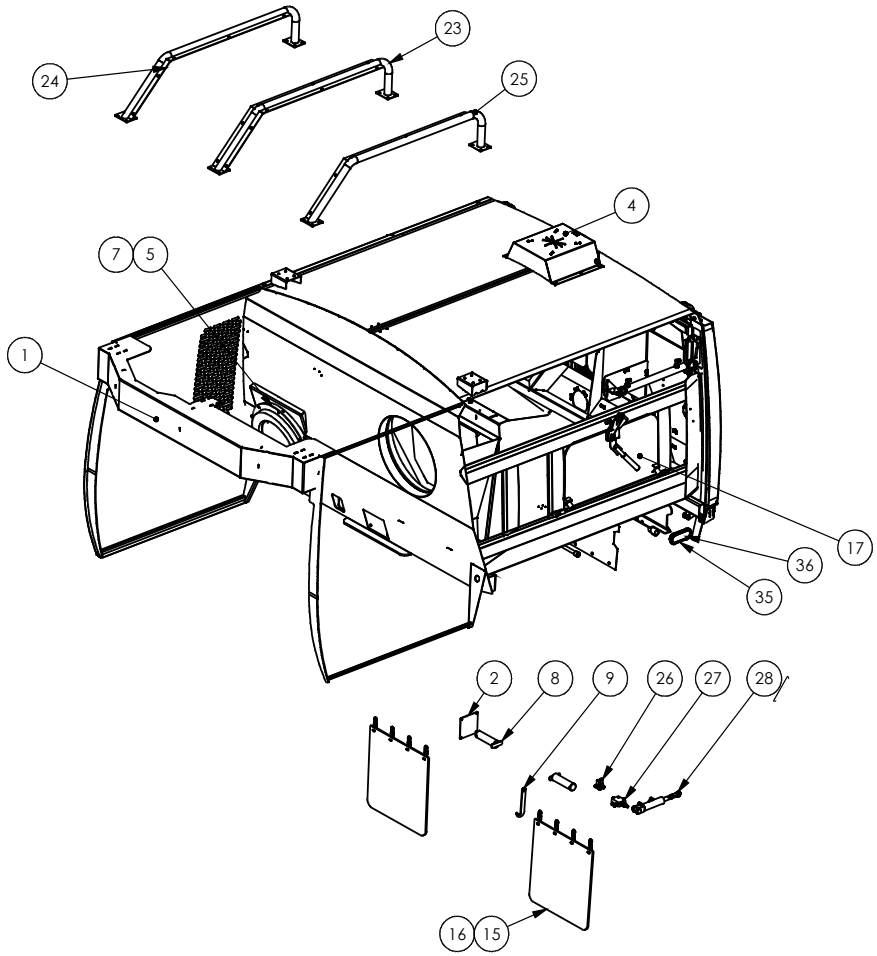

ITEM NO.	PART NUMBER	DESCRIPTION	QTY.
1	525298	HOPPER WELD, A9T, 3CR12, T4F	1
2	5222212	COVER,HOPPER TOOLBOX,A9,3CR12	1
3	525283	WELD, SEPARATOR DOOR, A9.3CR12	1
4	204Q76	BRAKE LIT,REAR CNTR,3CR12	1
5	523156	TUBE HOPPER INTAKE BOLT-IN A7	1
6	29494	SEAL,BOLT-IN INTAKE TUBE,A7000	1
7	54310	SEAL,INTAKE,A7000 BOLT-IN INTAKE TUBE	1
8	520311	HOPPER, MTG, PIN	2
9	5221955	HOP PROP LTCH HK, A7T, 3CR12	1
10	525186	WLD,HNG,DD,A7,TF4,SS 3CR12	2
11	5214014	DUMP DOOR HINGE PIN	2
12	23514	FITTING, 1/4-28 GREASE 90°	2
13	54710	3/4 X 2 CLEVIS PIN	4
14	22738	CLIP, 1-3/16" E	4
15	24029	MUDFLAP, 24 X 24 X 1/4	2
16	20814-3	CHAIN,1/4" 3 LINKS	8
17	204M94	INSPECTION DOOR ASSY,ROAD SIDE	1
18	204M95	INSPECTION DOOR ASSY,CURB SIDE	1
19	5223342	DOOR, CYLINDER BOX, 3CR12	2
20	204M27	CYLINDER, A9 DOOR ASSY, ORFS	2
21	204M61	HOPPER,DUMP DOOR ASSY,A9,3CR12	1
22	5207106	MAT, TOOL BOX	1
23	525111	ENGINE GUARD, MIDDLE WELD, A7	1
24	525110	ENGINE GUARD, LH WELD, A7	1
25	525112	ENGINE GUARD, RH WELD, A7	1
26	65462	TEE, 3/8" BULKHEAD MORFS	2
27	204M29	VALVE, SEQUENCE A9 DOOR	1
28	204R38	CYLINDER, HOPPER DOOR LATCH	1
29	204M66	HOPPR,TOOLBOX DR ASSY,A9,3CR12	1
30	61704	TURCK PRX SWITCH & BRKT	1
31	5222151	A9, PROX BRACKET, DOOR 3CR12	1
32	5222150	A9,PROX SENSE PLATE,DOOR,3CR12	1
33	28431	CLAMP, TOP 1/2" HARDLINE	4
34	28432	CLAMP, 1/2" TUBE, HALVES, TWIN	8
35	59875	GROMMET, OVAL 6"	2
36	55625	LIGHT, 6.5" WIDE, RED LED	2
37	5222213	WIRE COVER PLT,HOPPER,A9,3CR12	2
38	3001957	SPACER,HINGE, 1/4- A9-09	2
39	3001958	SPACER,HINGE, 3/8- A9-09	2

ITEMS BELOW NOT SHOWN

ITEM NO.	PART NUMBER	DESCRIPTION	QTY.
40	21530	TEE, 3/8" JIC UNION BULKHEAD	2
41	29256	KIT, HOPPER WATER SYSTEM	1
42	66306	TEE,3/8" ORF SWIVEL NUT BRANCH	2
43	20212	3/8 JIC, SW-NUT, BR-TEE	2
44	66154	DECAL, HOPPER LIFETIME WARRANT	1
45	204M28	KIT, HOSE, A9 DUP DOOR, ORFS	1

204M88 - HOPPER ASSY, A9T, 3CR12, T4F

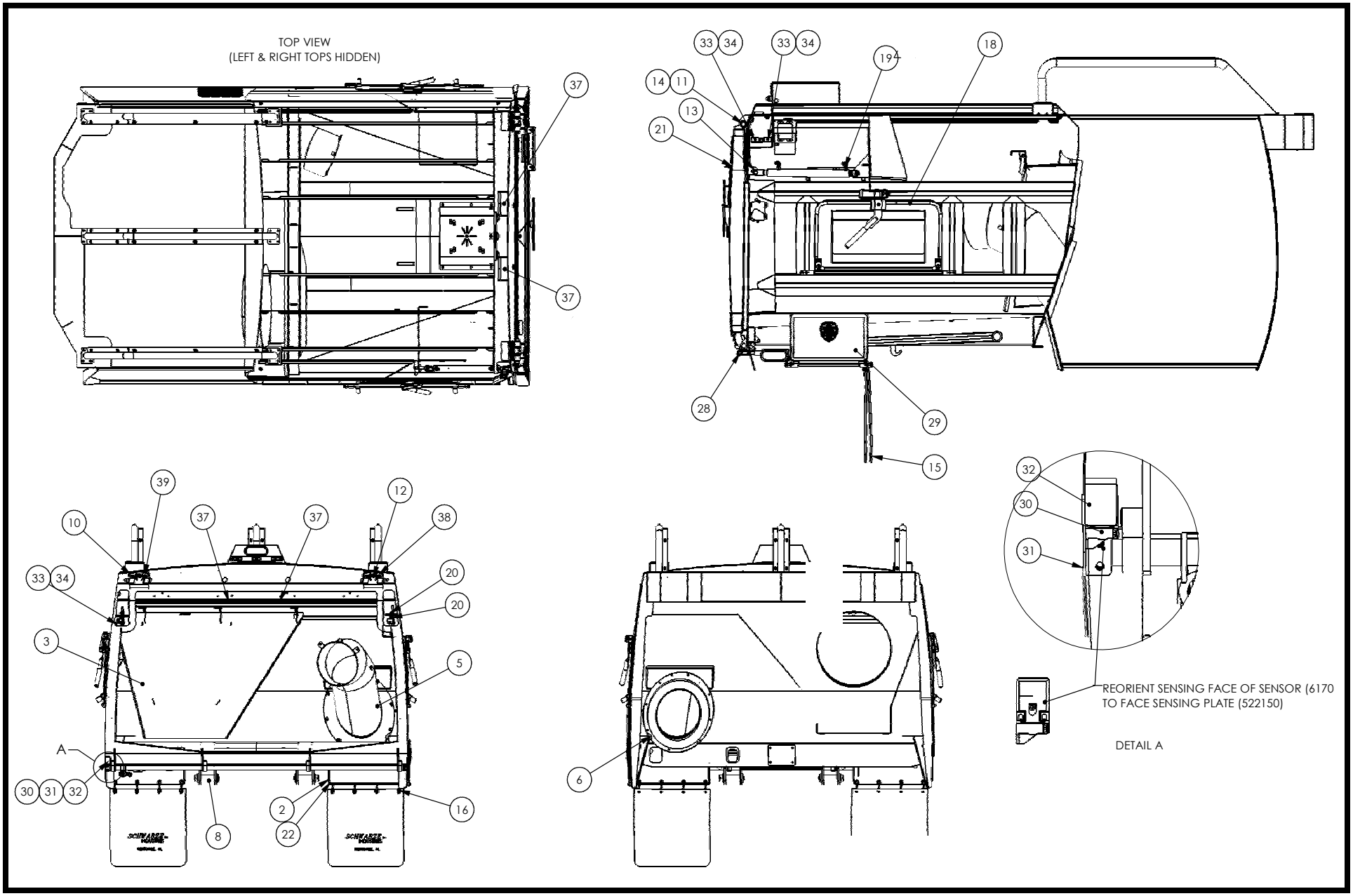

204M61 - HOPPER DUMP DOOR, SS

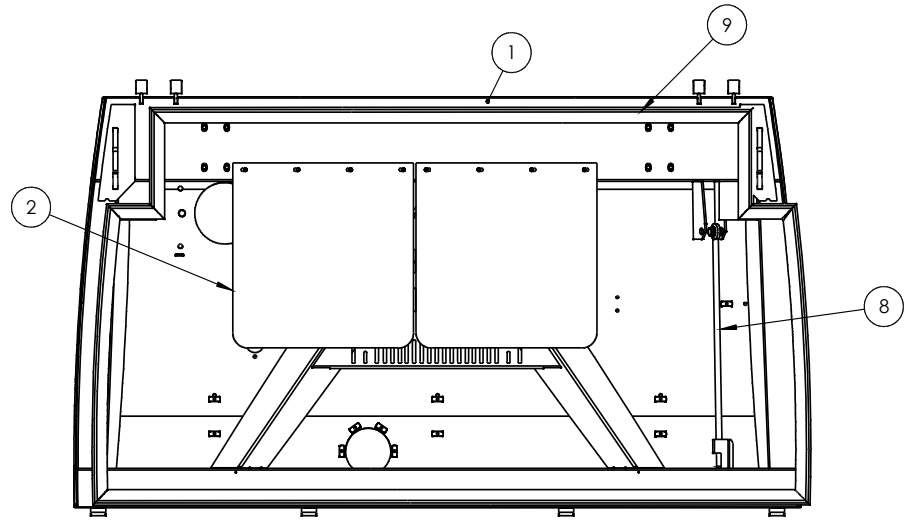

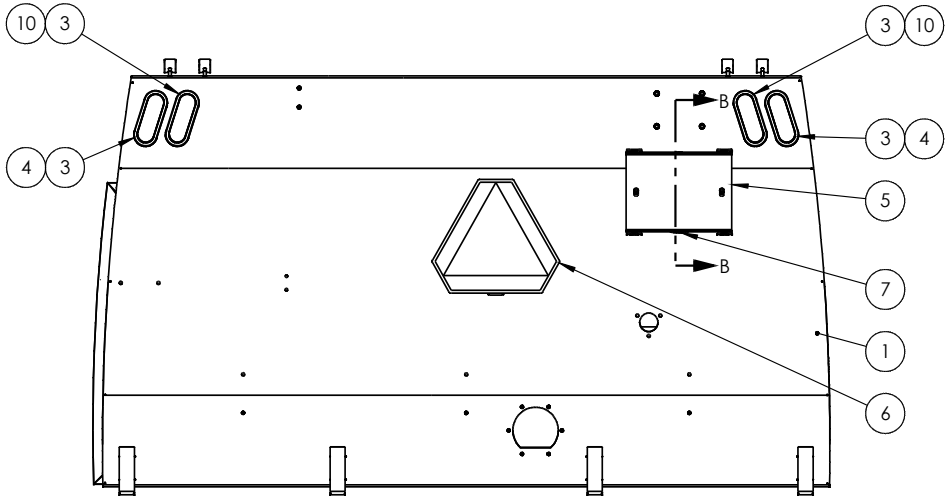

ITEM NO.	QTY.	PART NUMBER	DESCRIPTION
1	1	525280	HOPPER DUMP DOOR, A9, 3CR12
2	2	24029	MUDFLAP, 24 X 24 X 7/16
3	4	59875	GROMMET, OVAL 6"
4	2	55625	LIGHT, 6.5" WIDE, RED LED
5	1	5222172	HAND HOSE DOOR COVER, 3CR12
6	1	21456	SIGN,TRIANGLE WARNING
7	1	21428-30	SEAL MATERIAL,1/4 X 1-1/4,CUT TO 30"
8	1	523238	HOPPER DOOR PROP
9	1	64798	DOOR SEAL, A9T4 DUMP DOOR
10	2	54209	LIGHT, 6.5" WIDE, AMBER, LED
11	3	67175	ADH, RTV SILICONE, HIGH STRENGTH

*ITEMS NOT SHOWN

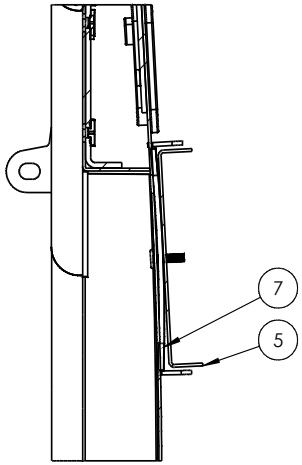

SECTION B-B

204U60 - INSTALL, HOPPER SS W/ENGN DOOR

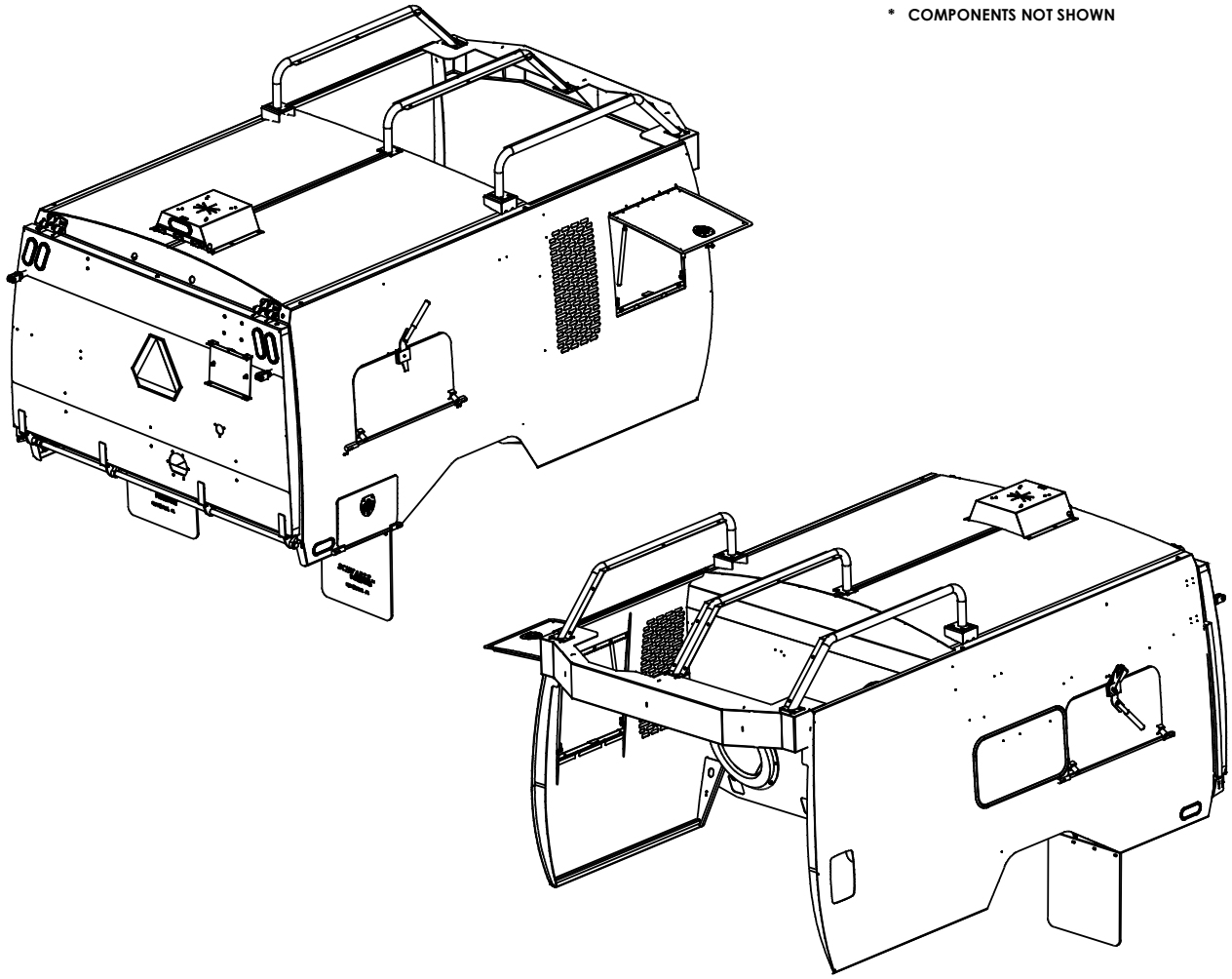

	ITEM NO.	PART NUMBER	QTY.	DESCRIPTION
*	46	21530	2	TEE, 3/8" JIC UNION BULKHEAD
*	47	29256	1	KIT, HOPPER WATER SYSTEM
*	48	66306	2	TEE,3/8" ORF SWIVEL NUT BRANCH
*	49	20212	2	3/8 JIC, SW-NUT, BR-TEE
*	50	66154	1	DECAL, HOPPER LIFETIME WARRANT
*	51	204M28	1	KIT, HOSE, A9 DUP DOOR, ORFS
*	52	204W53	1	KIT,HOSE A9T DUMP DOOR ORFS

*** COMPONENTS NOT SHOWN**

ITEM NO.	PART NUMBER	QTY.	DESCRIPTION
1	525283	1	WELD, SEPARATOR DOOR, A9,3CR12
2	5222212	1	COVER,HOPPER TOOLBOX,A9,3CR12
3	525823	1	HOPPER WELD, A9T, 3CR12, T4F
4	204Q76	1	BRAKE LIT,REAR CNTR,3CR12
5	523156	1	TUBE HOPPER INTAKE BOLT-IN A7
6	29494	1	SEAL,BOLT-IN INTAKE TUBE,A7000
7	54310	1	SEAL,INTAKE,A7000 BOLT-IN INTAKE TUBE
8	520311	2	HOPPER, MTG, PIN
9	5221955	1	HOP PROP LTCH HK, A7T, 3CR12
10	525186	2	WLD,HNG,DD,A7,TF4,SS 3CR12
11	5214014	2	DUMP DOOR HINGE PIN
12	23514	2	FITTING, 1/4-28 GREASE 90°
13	54710	4	3/4 X 2 CLEVIS PIN
14	22738	4	CLIP, 1-3/16" E
15	24029	2	MUDFLAP, 24 X 24 X 7/16
16	20814-3	8	CHAIN,1/4" 3 LINKS
17	204M94	1	INSPECTION DOOR ASSY,ROAD SIDE
18	204M95	1	INSPECTION DOOR ASSY,CURB SIDE
19	5223342	2	DOOR, CYLINDER BOX, 3CR12
20	204M27	2	CYLINDER, A9 DOOR ASSY, ORFS
21	204M61	1	HOPPER,DUMP DOOR ASSY,A9,3CR12
22	5207106	1	MAT, TOOL BOX
23	525111	1	ENGINE GUARD, MIDDLE WELD, A7
24	525110	1	ENGINE GUARD, LH WELD, A7
25	525112	1	ENGINE GUARD, RH WELD, A7
26	65462	2	TEE, 3/8" BULKHEAD MORFS
27	204M29	1	VALVE, SEQUENCE A9 DOOR
28	204W45	1	CYLINDER,DR LTCH C-BAL A7/A9
29	204M66	1	HOPPR,TOOLBOX DR ASSY,A9,3CR12
30	61704	1	TURCK PRX SWITCH & BRKT
31	5222151	1	A9, PROX BRACKET, DOOR 3CR12
32	5222150	1	A9,PROX SENSE PLATE,DOOR,3CR12
33	28431	4	CLAMP, TOP 1/2" HARDLINE
34	28432	8	CLAMP, 1/2" TUBE, HALVES, TWIN
35	59875	2	GROMMET, OVAL 6"
36	55625	2	LIGHT, 6.5" WIDE, RED LED
37	5222213	2	WIRE COVER PLT,HOPPER,A9,3CR12
38	3001957	2	SPACER,HINGE, 1/4- A9-09
39	3001958	2	SPACER,HINGE, 3/8- A9-09
40	5223920	1	HINGE, ENGINE DOOR, A9T
41	29148	2	BUMPER,RUBBER HOLLOW STEM
42	29138	1	T-HANDLE LATCH
43	525817	1	WELD, ENGINE DOOR, A SERIES
44	67127	2	GAS SPRING, 28" EXT, GV
45	67128	4	ROD END, BALL JOINT, M8

204U60 - INSTALL, HOPPER SS W/ENGN DOOR

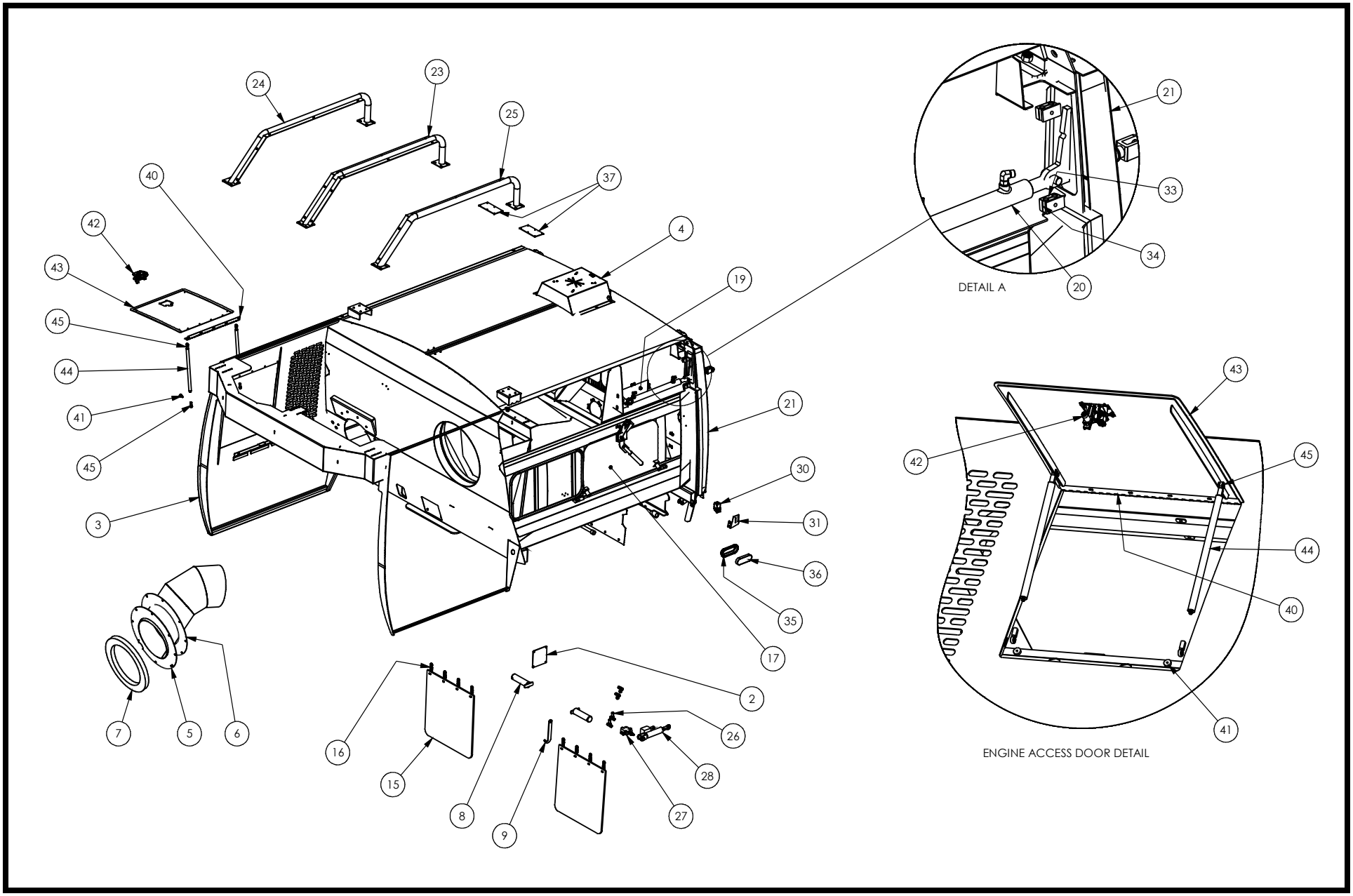

204U60 - INSTALL, HOPPER SS W/ENGN DOOR

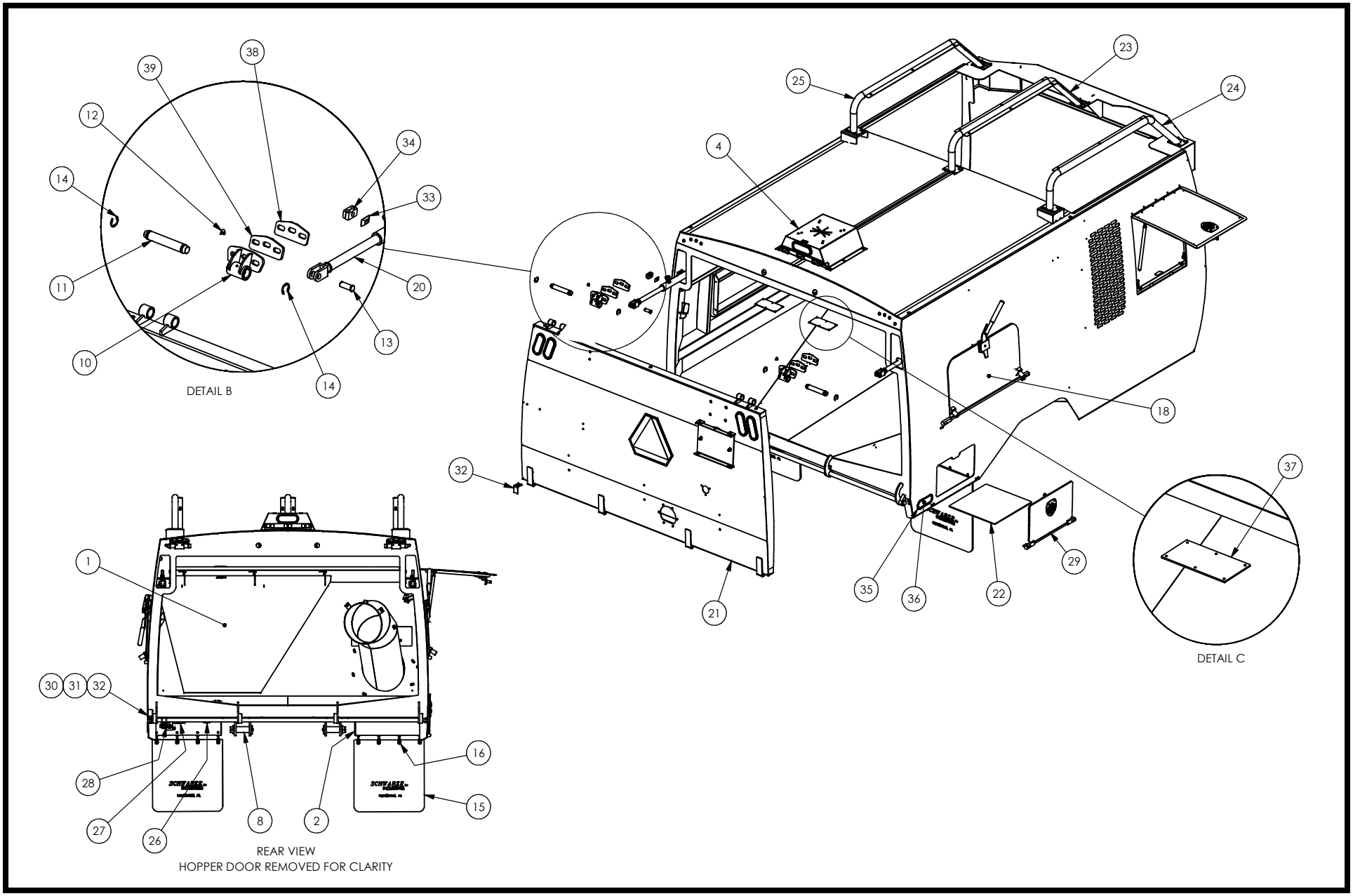

204V07 - HOPPER ASSY A9T CUMMINS

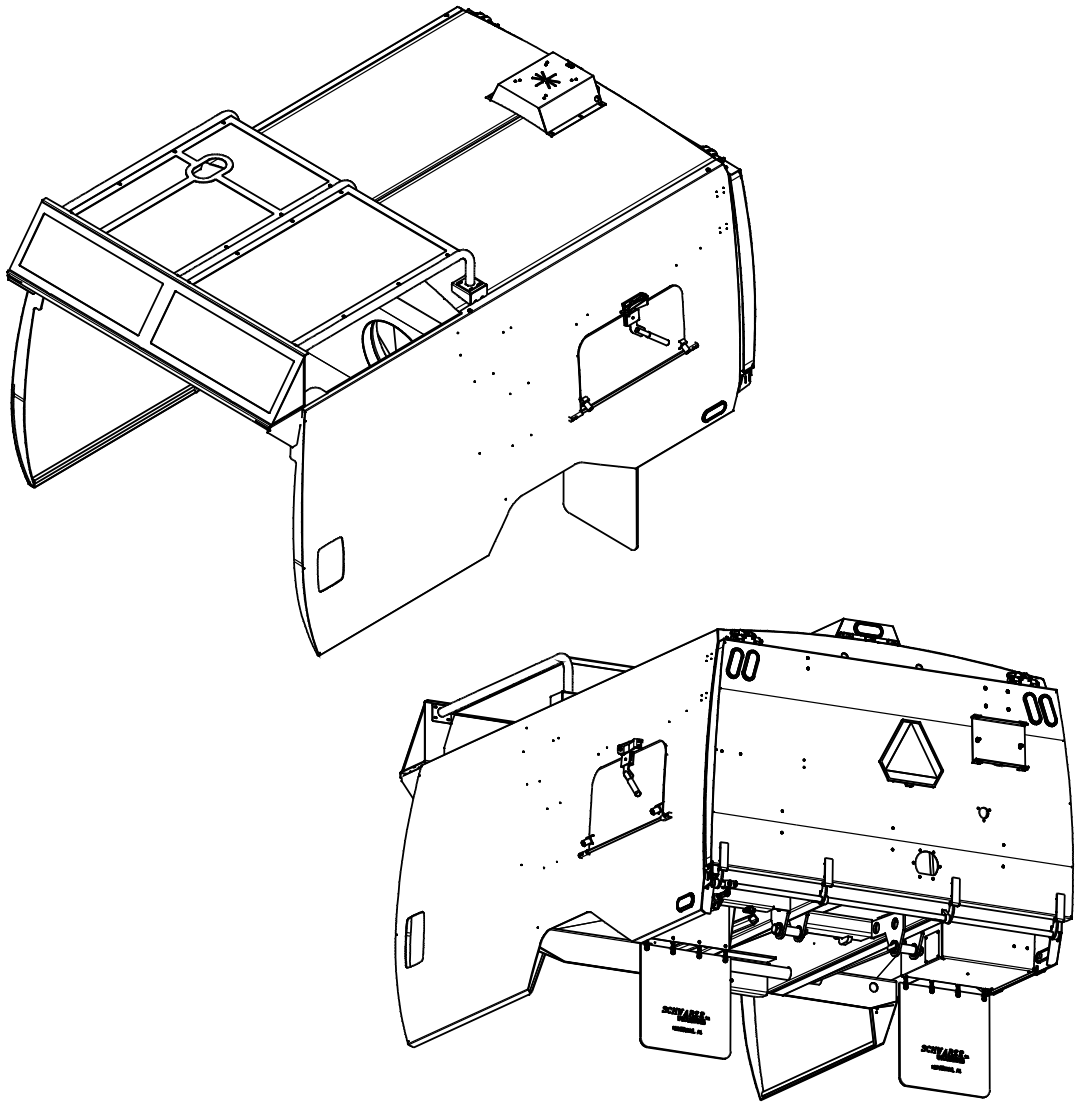

ITEM NO.	PART NUMBER	DESCRIPTION	QTY.
1	525892	WLD,HOPPER,A9T,CUMMINS,MS	1
2	5215010	COVER,HOPPER TOOLBOX,A7000	1
3	524920	WELD, SEPERATOR DOOR, A9	1
4	204Q77	BRAKE LIGHT, REAR CENTER ASSY	1
5	523156	TUBE HOPPER INTAKE BOLT-IN A7	1
6	29494	SEAL,BOLT-IN INTAKE TUBE,A7000	1
7	54310	SEAL,INTAKE,A7000 BOLT-IN INTAKE TUBE	1
8	520311	HOPPER, MTG, PIN	2
9	55625	LIGHT, 6.5" WIDE, RED LED	2
10	5223342	DOOR, CYLINDER BOX, 3CR12	2
11	5201914	HOPPER PROP LATCH HOOK, A7,	1
12	523239	WELD, HINGE, D/D, A9-08	2
13	203L86	HOPPER, DUMP DOOR ASSEMBLY, A9	1
14	5214014	DUMP DOOR HINGE PIN	2
15	23514	FITTING, 1/4-28 GREASE 90°	2
16	5222213	WIRE COVER PLT,HOPPER,A9,3CR12	2
17	204M27	CYLINDER, A9 DOOR ASSY, ORFS	2
18	54710	3/4 X 2 CLEVIS PIN	4
19	204M95	INSPECTION DOOR ASSY,CURB SIDE	1
20	204M94	INSPECTION DOOR ASSY,ROAD SIDE	1
21	24029	MUDFLAP, 24 X 24 X 1/4	2
22	20814-3	CHAIN,1/4" 3 LINKS	8
23	5207106	MAT, TOOL BOX	1
24	204M29	VALVE, SEQUENCE A9 DOOR	1
25	204R38	CYLINDER, HOPPER DOOR LATCH	1
26	204M66	HOPPR,TOOLBOX DR ASSY,A9,3CR12	1
27	61704	TURCK PRX SWITCH & BRKT	1
28	5222151	A9, PROX BRACKET, DOOR 3CR12	1
29	5222150	A9,PROX SENSE PLATE,DOOR,3CR12	1
30	28431	CLAMP, TOP 1/2" HARDLINE	4
31	28432	CLAMP, 1/2" TUBE, HALVES, TWIN	8
32	59875	GROMMET, OVAL 6"	2
33	65462	TEE, 3/8" BULKHEAD MORFS	2
34	3001957	SPACER,HINGE, 1/4- A9-09	2
35	3001958	SPACER,HINGE, 3/8- A9-09	2
36	66306	TEE,3/8" ORF SWIVEL NUT BRANCH	2
37	22738	CLIP, 1-3/16" E	4
38*	5218768	SPACER, HOPPER LATCH	1
39*	20212	3/8 JIC, SW-NUT, BR-TEE	2
40*	21530	TEE, 3/8" JIC UNION BULKHEAD	2
41*	29256	KIT, HOPPER WATER SYSTEM	1
42*	204M28	KIT, HOSE, A9 DUMP DOOR, ORFS	1
43	204U72	INSTALL, CUMMINS LIMB GUARD	1

* COMPONENTS NOT SHOWN

204V07 - HOPPER ASSY A9T CUMMINS

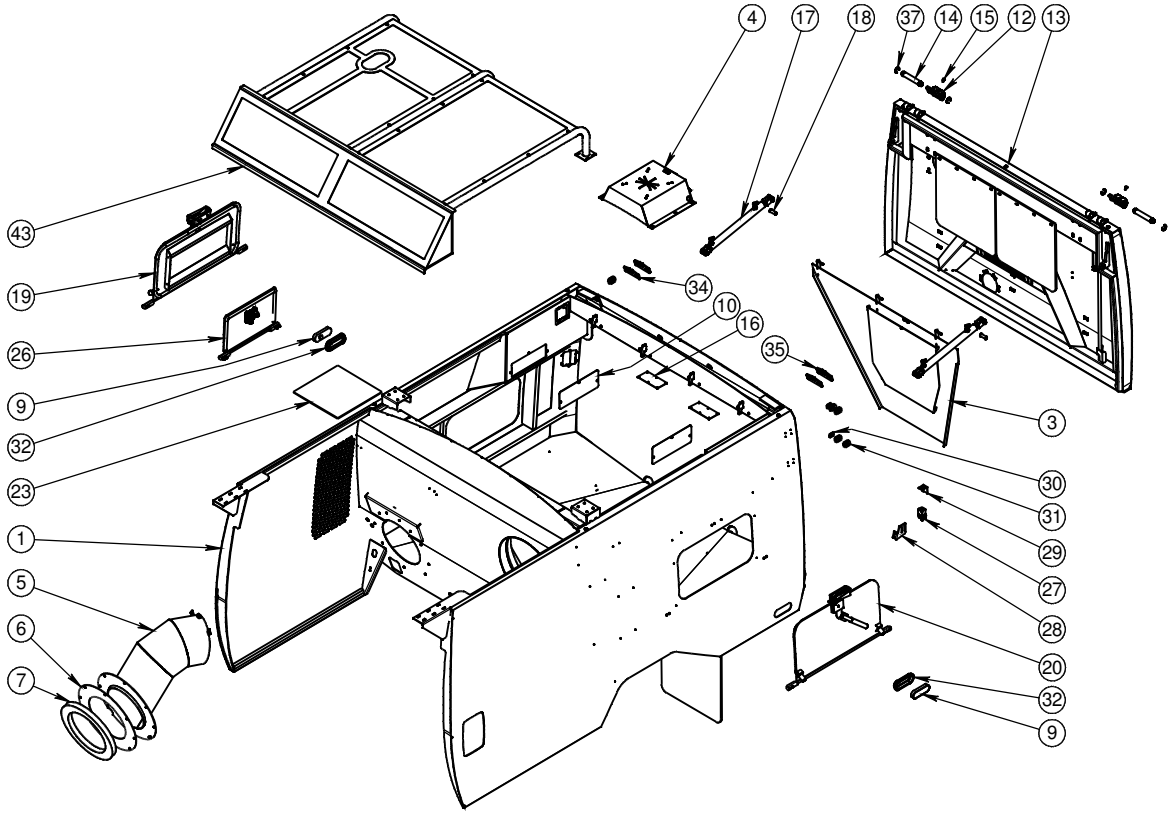

NOTE: HOPPER TOP AND TOP REINFORCEMENT COMPONENTS
NOT SHOWN FOR CLARITY

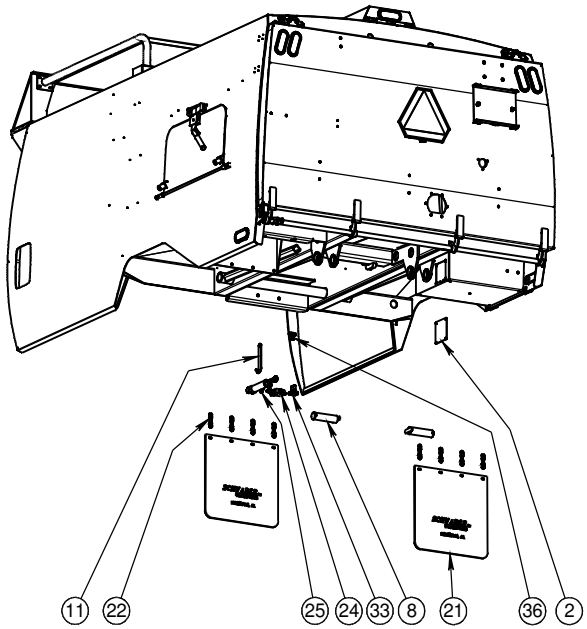

204V08 - HOPPER ASSY A9T,CUMMINS,304SS

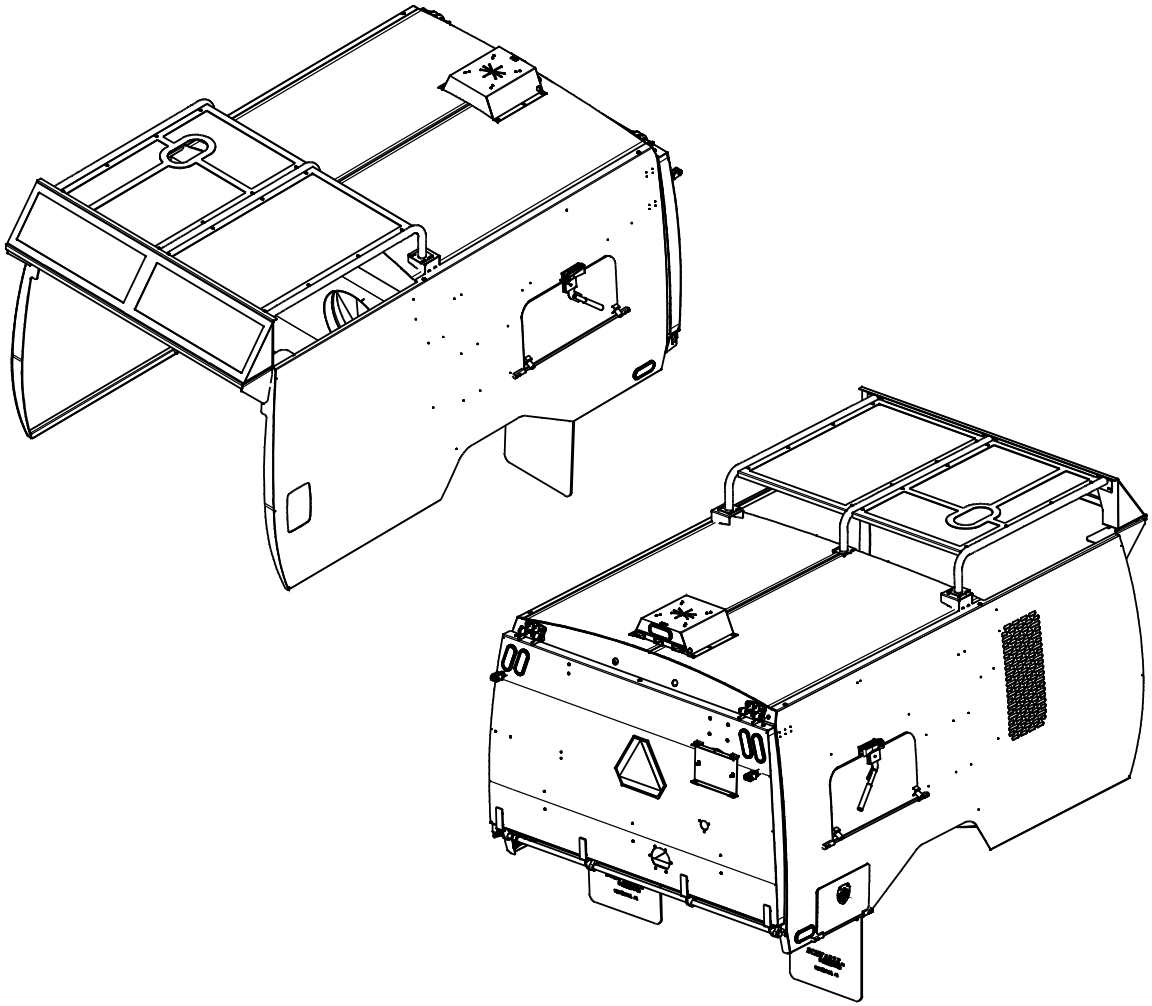

ITEM NO.	PART NUMBER	DESCRIPTION	QTY.
1	525893	WLD,HOPPER,A9T,CUMMINS,304SS	1
2	5215010	COVER,HOPPER TOOLBOX,A7000	1
3	524920	WELD, SEPERATOR DOOR, A9	1
4	204Q76	BRAKE LIT,REAR CNTR,3CR12	1
5	523156	TUBE HOPPER INTAKE BOLT-IN A7	1
6	29494	SEAL,BOLT-IN INTAKE TUBE,A7000	1
7	54310	SEAL,INTAKE,A7000 BOLT-IN INTAKE TUBE	1
8	520311	HOPPER, MTG, PIN	2
9	55625	LIGHT, 6.5" WIDE, RED LED	2
10	5223343	DOOR, CYLINDER BOX, SS	2
11	5201914	HOPPER PROP LATCH HOOK, A7,	1
12	523239	WELD, HINGE, D/D, A9-08	2
13	203L95	HOPPER, DUMP DOOR ASSY, SS	1
14	5214014	DUMP DOOR HINGE PIN	2
15	23514	FITTING, 1/4-28 GREASE 90°	2
16	5215864	WIRE COVER PLATE, HOPPER, SS	2
17	204M27	CYLINDER, A9 DOOR ASSY, ORFS	2
18	54710	3/4 X 2 CLEVIS PIN	4
19	204M95	INSPECTION DOOR ASSY,CURB SIDE	1
20	204M94	INSPECTION DOOR ASSY,ROAD SIDE	1
21	24029	MUDFLAP, 24 X 24 X 7/16	2
22	20814-3	CHAIN,1/4" 3 LINKS	8
23	5207106	MAT, TOOL BOX	1
24	204M29	VALVE, SEQUENCE A9 DOOR	1
25	204R38	CYLINDER, HOPPER DOOR LATCH	1
26	204M66	HOPPR,TOOLBOX DR ASSY,A9,3CR12	1
27	61704	TURCK PRX SWITCH & BRKT	1
28	5222151	A9, PROX BRACKET, DOOR 3CR12	1
29	5222150	A9,PROX SENSE PLATE,DOOR,3CR12	1
30	28431	CLAMP, TOP 1/2" HARDLINE	4
31	28432	CLAMP, 1/2" TUBE, HALVES, TWIN	8
32	59875	GROMMET, OVAL 6"	2
33	65462	TEE, 3/8" BULKHEAD MORFS	2
34	3001957	SPACER,HINGE, 1/4- A9-09	2
35	3001958	SPACER,HINGE, 3/8- A9-09	2
36	66306	TEE,3/8" ORF SWIVEL NUT BRANCH	2
37	22738	CLIP, 1-3/16" E	4
38*	5218768	SPACER, HOPPER LATCH	1
39*	20212	3/8 JIC, SW-NUT, BR-TEE	2
40*	21530	TEE, 3/8" JIC UNION BULKHEAD	2
41*	29256	KIT, HOPPER WATER SYSTEM	1
42*	204M28	KIT, HOSE, A9 DUMP DOOR, ORFS	1
43	204U72	INSTALL, CUMMINS LIMB GUARD	1

* COMPONENTS NOT SHOWN

204V08 - HOPPER ASSY A9T,CUMMINS,304SS

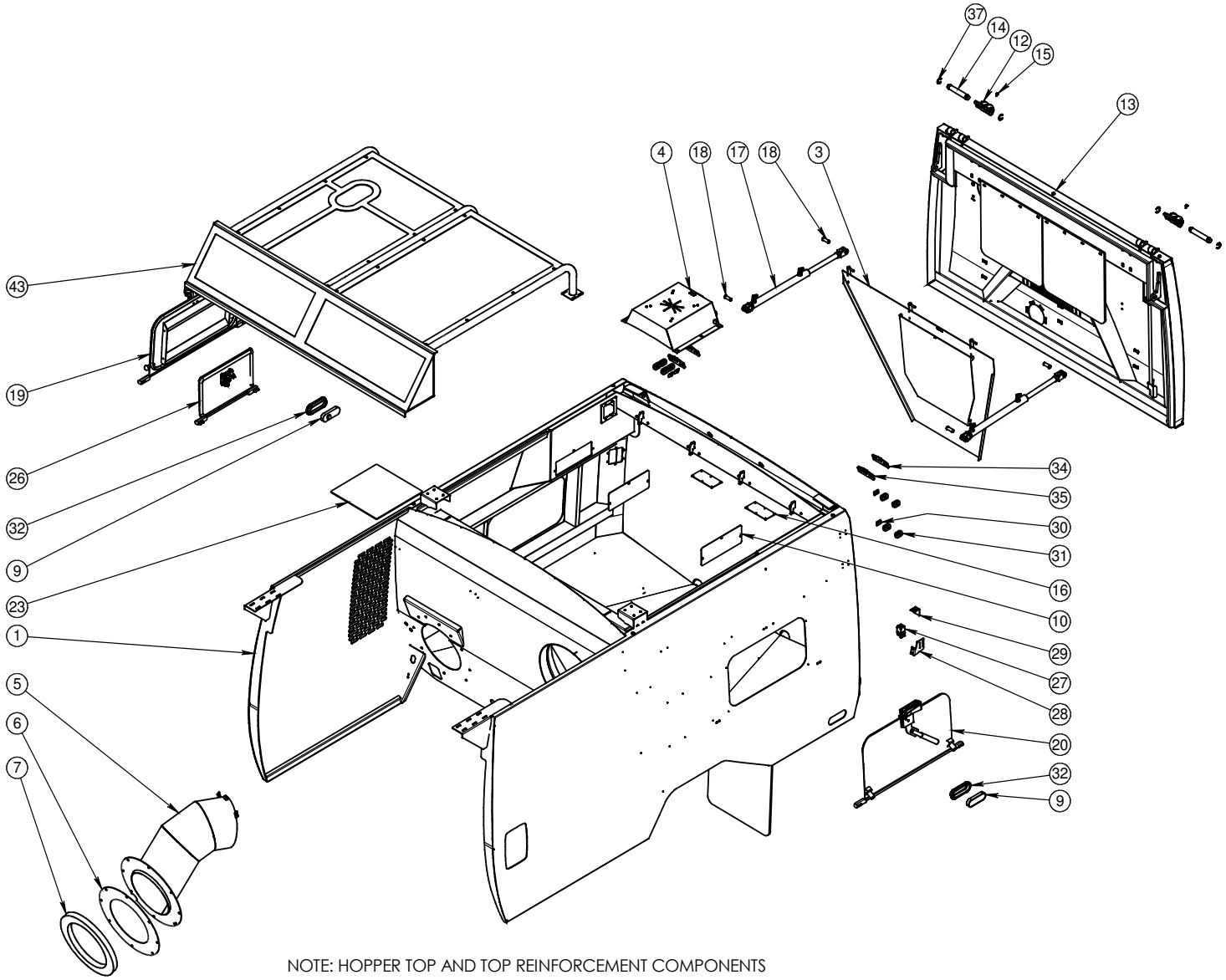

NOTE: HOPPER TOP AND TOP REINFORCEMENT COMPONENTS
NOT SHOWN FOR CLARITY

204V08 - HOPPER ASSY A9T,CUMMINS,304SS

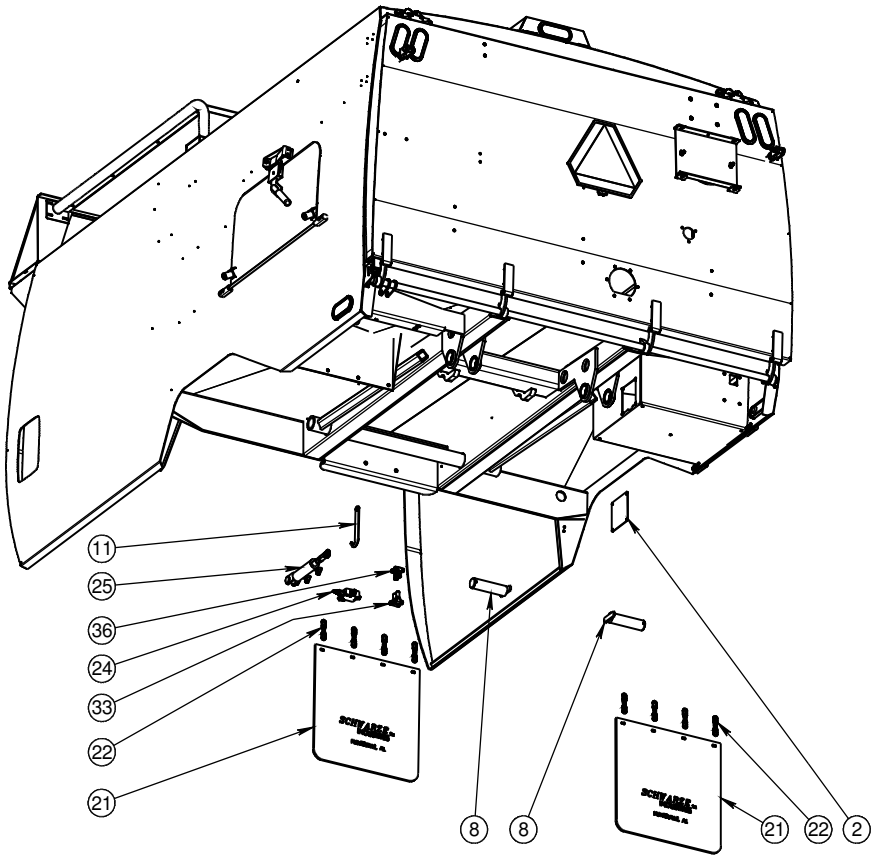

204V09 - HOPPER ASSY A9T,CUMMINS,3CR12

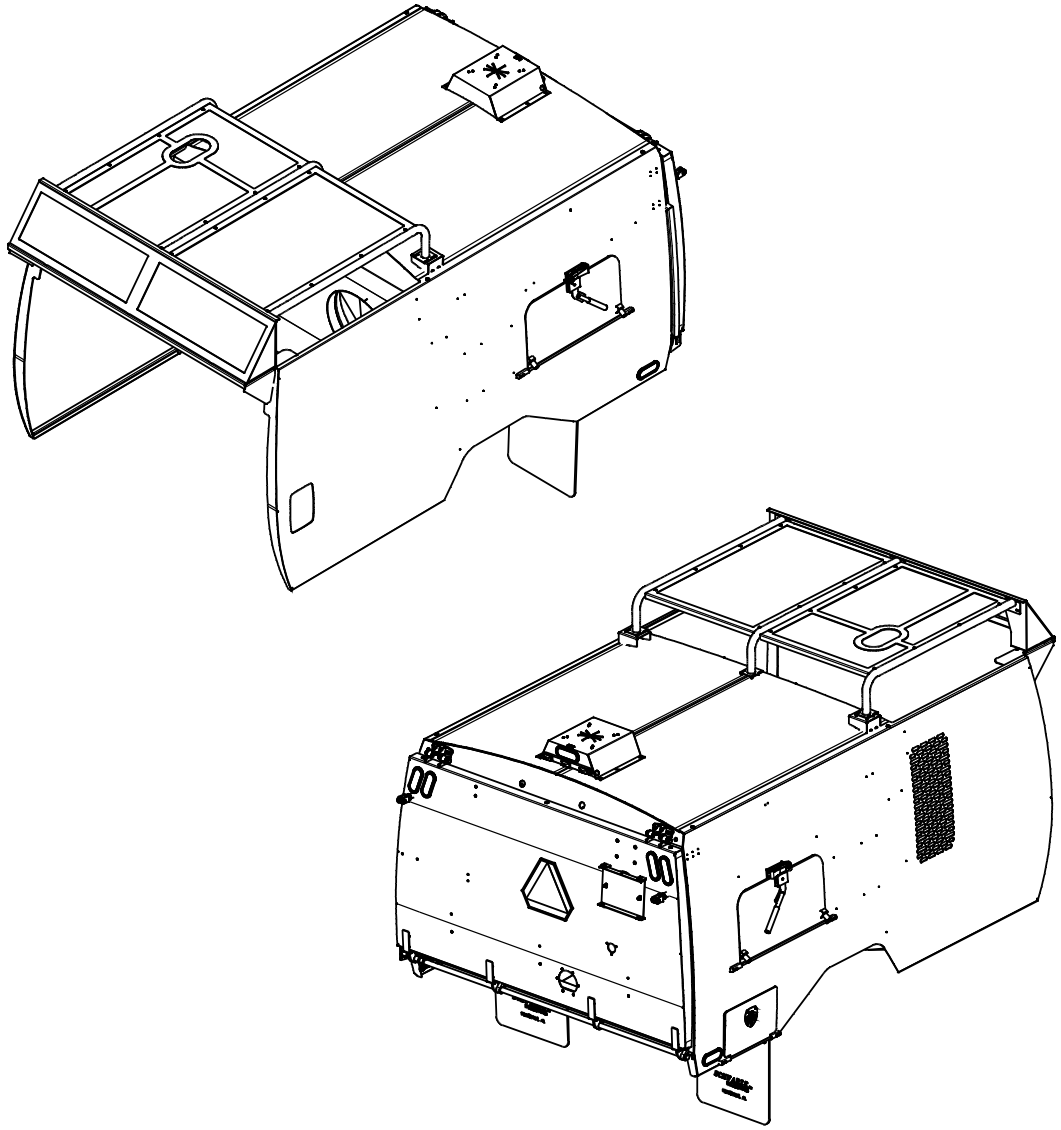

ITEM NO.	PART NO.	QTY.	DESCRIPTION
1	525894	1	WLD, HOPPER, A9T, 3CR12
2	204M61	1	HOPPER,DUMP DOOR ASSY,A9,3CR12
3	524920	1	WELD, SEPERATOR DOOR, A9
4	204Q76	1	BRAKE LIT,REAR CNTR,3CR12
5	523156	1	TUBE HOPPER INTAKE BOLT-IN A7
6	29494	1	SEAL,BOLT-IN INTAKE TUBE,A7000
7	5215010	1	COVER,HOPPER TOOLBOX,A7000
8	54310	1	SEAL,INTAKE,A7000 BOLT-IN INTAKE TUBE
9	520311	2	HOPPER, MTG, PIN
10	55625	2	LIGHT, 6.5" WIDE, RED LED
11	5223343	2	DOOR, CYLINDER BOX, SS
12	5201914	1	HOPPER PROP LATCH HOOK, A7,
13	523239	2	WELD, HINGE, D/D, A9-08
14	5214014	2	DUMP DOOR HINGE PIN
15	23514	2	FITTING, 1/4-28 GREASE 90°
16	5215864	2	WIRE COVER PLATE, HOPPER, SS
17	204M27	2	CYLINDER, A9 DOOR ASSY, ORFS
18	54710	4	3/4 X 2 CLEVIS PIN
19	204M95	1	INSPECTION DOOR ASSY,CURB SIDE
20	204M94	1	INSPECTION DOOR ASSY,ROAD SIDE
21	24029	2	MUDFLAP, 24 X 24 X 7/16
22	20814-3	8	CHAIN,1/4" 3 LINKS
23	5207106	1	MAT, TOOL BOX
24	204M29	1	VALVE, SEQUENCE A9 DOOR
25	204R38	1	CYLINDER, HOPPER DOOR LATCH
26	204M66	1	HOPPR,TOOLBOX DR ASSY,A9,3CR12
27	61704	1	TURCK PRX SWITCH & BRKT
28	5222151	1	A9, PROX BRACKET, DOOR 3CR12
29	5222150	1	A9,PROX SENSE PLATE,DOOR,3CR12
30	28431	4	CLAMP, TOP 1/2" HARDLINE
31	28432	8	CLAMP, 1/2" TUBE, HALVES, TWIN
32	59875	2	GROMMET, OVAL 6"
33	65462	2	TEE, 3/8" BULKHEAD MORFS
34	66306	2	TEE,3/8" ORF SWIVEL NUT BRANCH
35	22738	4	CLIP, 1-3/16" E
36	5218768	4	SPACER, HOPPER LATCH
37	20212	2	3/8 JIC, SW-NUT, BR-TEE
38	21530	2	TEE, 3/8" JIC UNION BULKHEAD
39	29256	1	KIT, HOPPER WATER SYSTEM
40	3001957	2	SPACER,HINGE, 1/4- A9-09
41	3001958	2	SPACER,HINGE, 3/8- A9-09
42	204U72	1	INSTALL, CUMMINS LIMB GUARD

* COMPONENTS NOT SHOWN

204V09 - HOPPER ASSY A9T,CUMMINS,3CR12

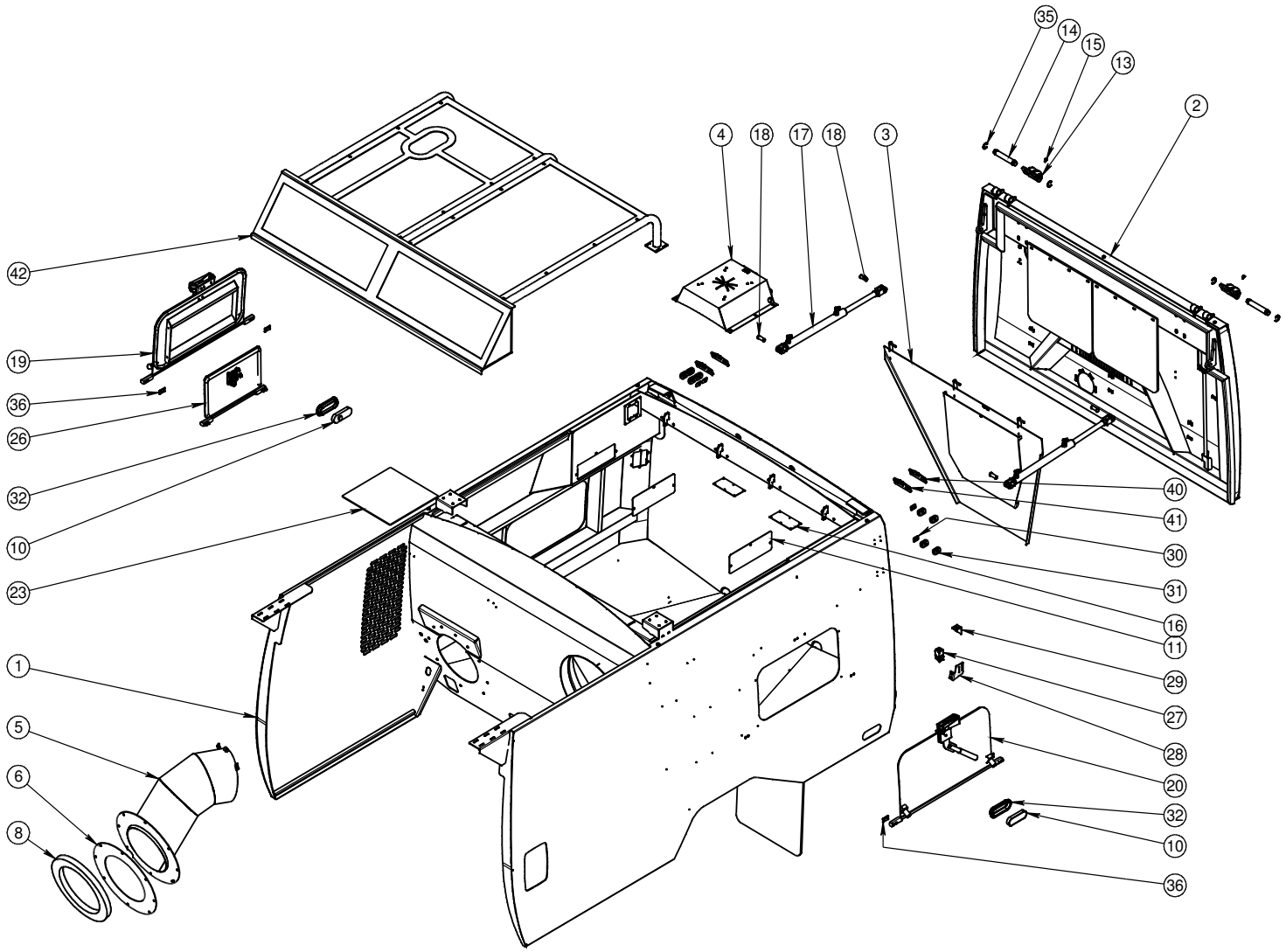

NOTE: HOPPER TOP AND TOP REINFORCEMENT COMPONENTS
NOT SHOWN FOR CLARITY

204V09 - HOPPER ASSY A9T,CUMMINS,3CR12

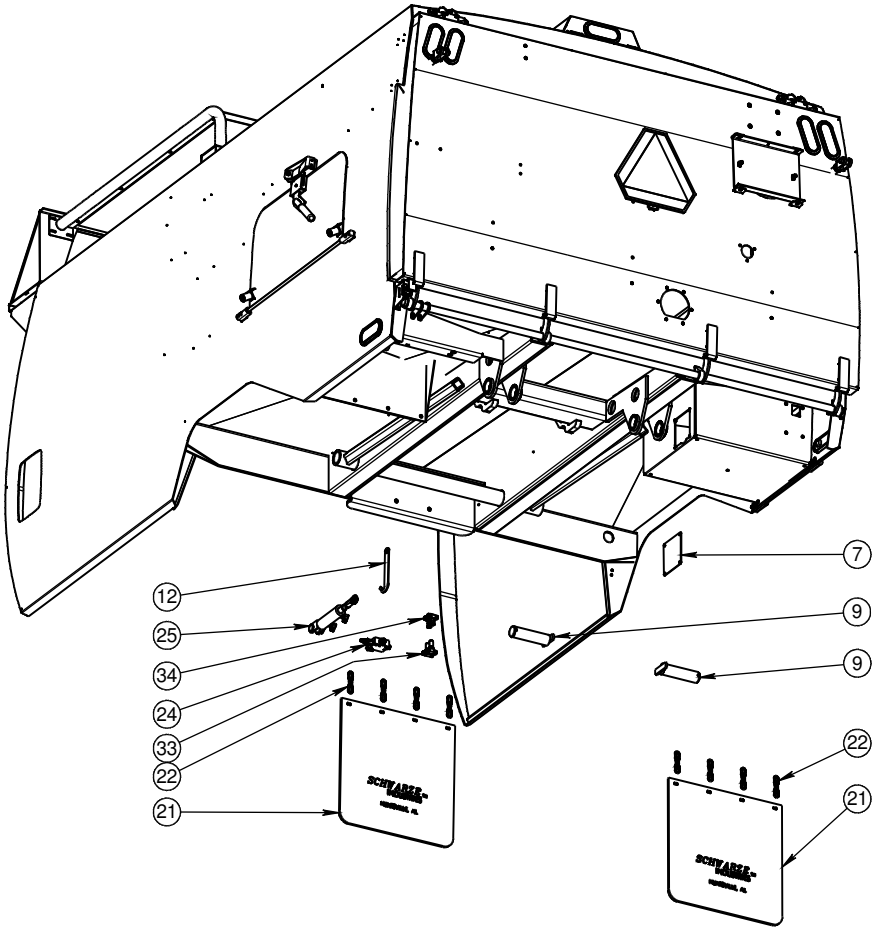

204V15 - HOPPER ASSY A9T,E-A,CUMMINS,MS

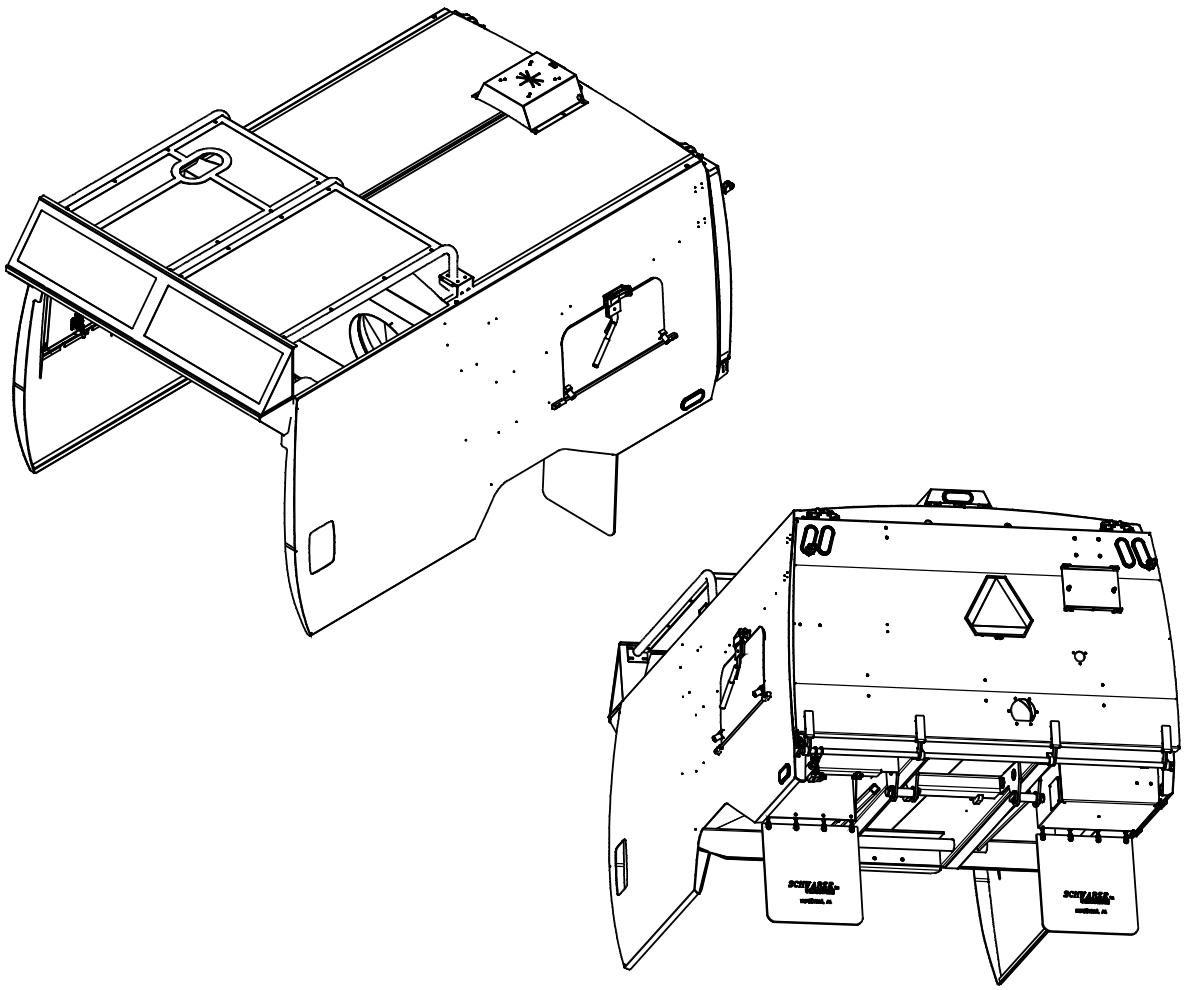

	ITEM NO.	PART NO.	QTY.	DESCRIPTION
	42	29138	1	T-HANDLE LATCH
	43	29148	2	BUMPER,RUBBER HOLLOW STEM
	44	5223920	1	HINGE, ENGINE DOOR, A9T
	45	525817	1	WELD, ENGINE DOOR, A SERIES
	46	67127	2	GAS SPRING, 28" EXT, GV
	47	67128	4	ROD END, BALL JOINT, M8
*	48	204W53	1	KIT,HOSE A9T DUMP DOOR ORFS

	ITEM NO.	PART NO.	QTY.	DESCRIPTION
	1	525897	1	WLD,HPR,E-A,A9T,CUMMINS
	2	5215010	1	COVER,HOPPER TOOLBOX,A7000
	3	524920	1	WELD, SEPERATOR DOOR, A9
	4	204Q77	1	BRAKE LIGHT, REAR CENTER ASSY
	5	523156	1	TUBE HOPPER INTAKE BOLT-IN A7
	6	29494	1	SEAL,BOLT-IN INTAKE TUBE,A7000
	7	54310	1	SEAL,INTAKE,A7000 BOLT-IN INTAKE TUBE
	8	520311	2	HOPPER, MTG, PIN
	9	55625	2	LIGHT, 6.5" WIDE, RED LED
	10	5223342	2	DOOR, CYLINDER BOX, 3CR12
	11	5201914	1	HOPPER PROP LATCH HOOK, A7,
	12	523239	2	WELD, HINGE, D/D, A9-08
	13	203L86	1	HOPPER, DUMP DOOR ASSEMBLY, A9
	14	5214014	2	DUMP DOOR HINGE PIN
	15	23514	2	FITTING, 1/4-28 GREASE 90°
	16	5222213	2	WIRE COVER PLT,HOPPER,A9,3CR12
	17	204M27	2	CYLINDER, A9 DOOR ASSY, ORFS
	18	54710	4	3/4 X 2 CLEVIS PIN
	19	24029	2	MUDFLAP, 24 X 24 X 1/4
	20	20814-3	8	CHAIN,1/4" 3 LINKS
	21	5207106	1	MAT, TOOL BOX
	22	204M29	1	VALVE, SEQUENCE A9 DOOR
	23	204W45	1	CYLINDER,DR LTCH C-BAL A7/A9
	24	204M66	1	HOPPR,TOOLBOX DR ASSY,A9,3CR12
	25	61704	1	TURCK PRX SWITCH & BRKT
	26	5222151	1	A9, PROX BRACKET, DOOR 3CR12
	27	5222150	1	A9,PROX SENSE PLATE,DOOR,3CR12
	28	28431	4	CLAMP, TOP 1/2" HARDLINE
	29	28432	8	CLAMP, 1/2" TUBE, HALVES, TWIN
	30	59875	2	GROMMET, OVAL 6"
	31	65462	2	TEE, 3/8" BULKHEAD MORFS
	32	66306	2	TEE,3/8" ORF SWIVEL NUT BRANCH
	33	22738	4	CLIP, 1-3/16" E
*	34	20212	2	3/8 JIC, SW-NUT, BR-TEE
*	35	21530	2	TEE, 3/8" JIC UNION BULKHEAD
*	36	29256	1	KIT, HOPPER WATER SYSTEM
	37	3001957	2	SPACER,HINGE, 1/4- A9-09
	38	3001958	2	SPACER,HINGE, 3/8- A9-09
	39	204M95	2	INSPECTION DOOR ASSY,CURB SIDE
	40	5218768	4	SPACER, HOPPER LATCH
	41	204U72	1	INSTALL, CUMMINS LIMB GUARD

* COMPONENTS NOT SHOWN

204V15 - HOPPER ASSY A9T,E-A,CUMMINS,MS

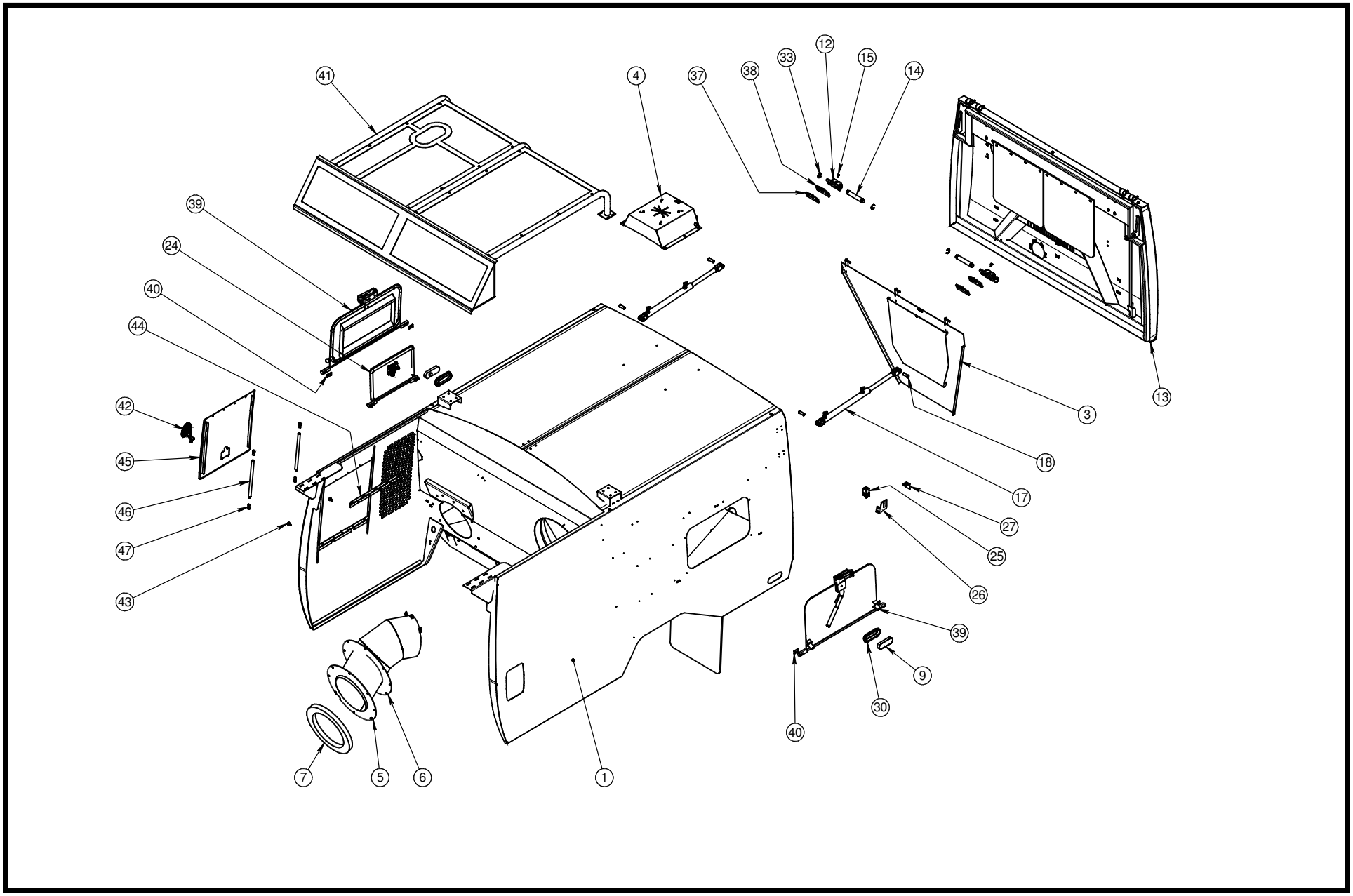

204V15 - HOPPER ASSY A9T,E-A,CUMMINS,MS

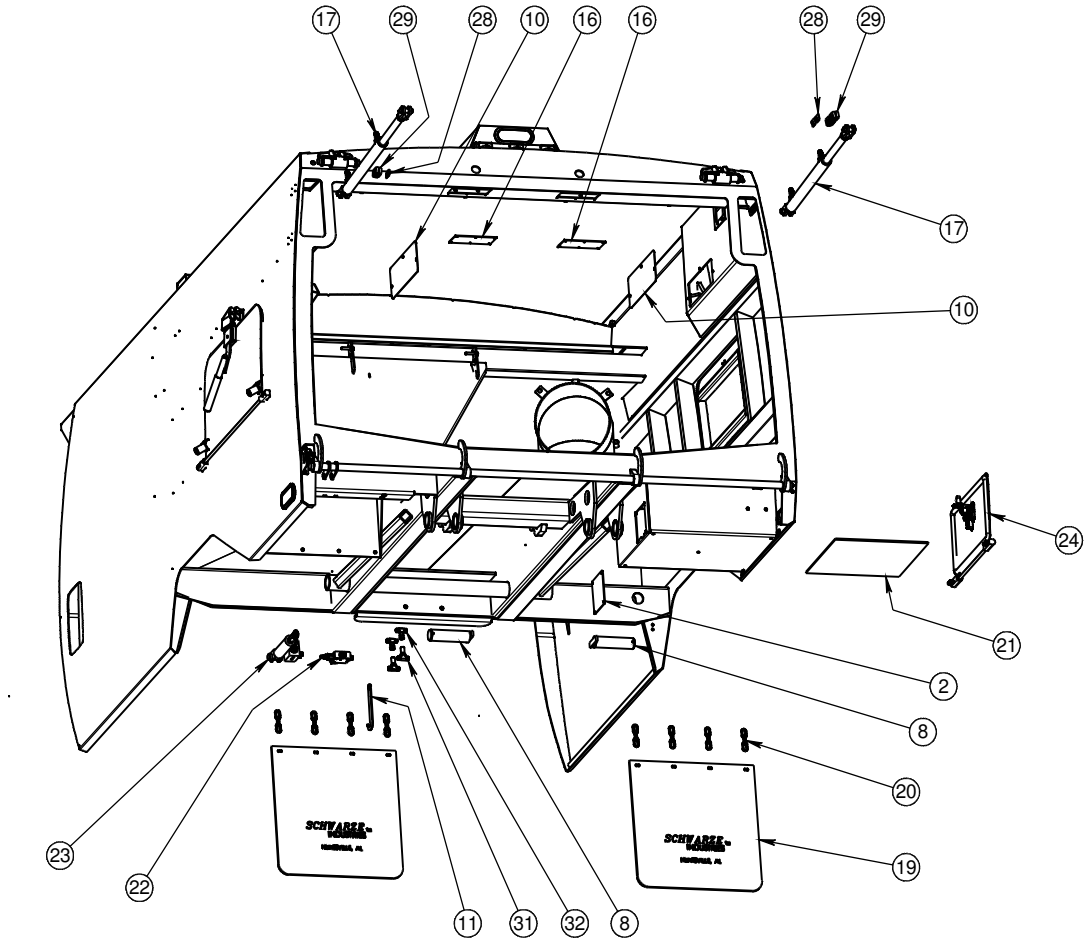

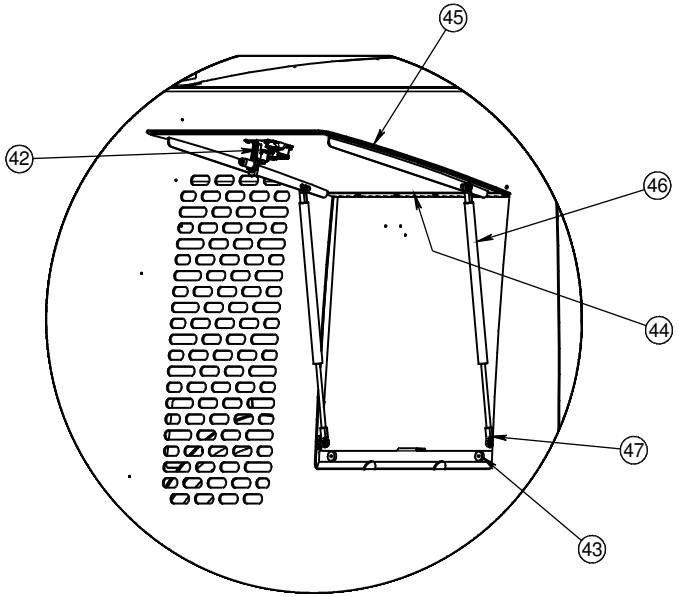

ENGINE ACCESS DOOR DETAIL

204V16 - HOPPER ASSY A9T,E-A,CUMMINS,304S

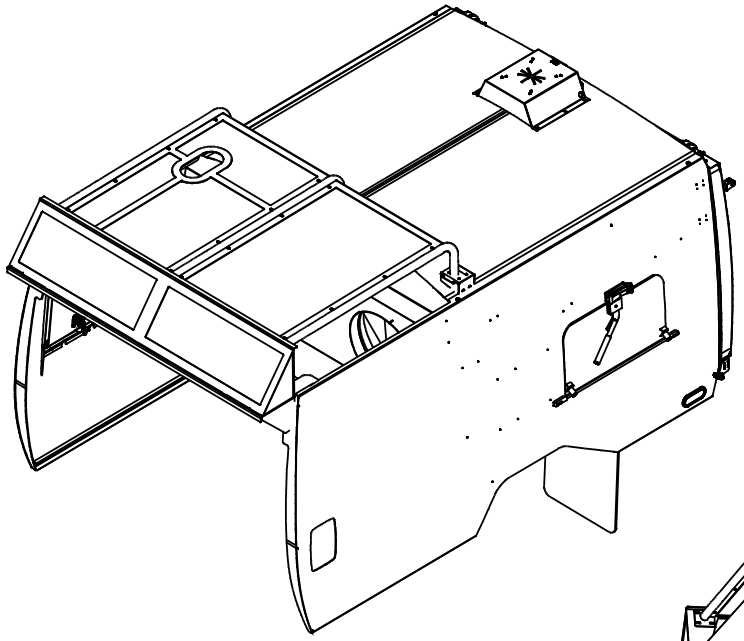

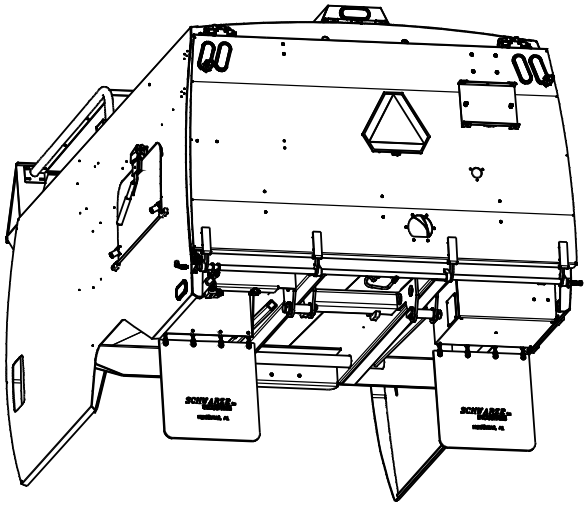

	ITEM NO.	PART NO.	QTY.	DESCRIPTION
	42	29138	1	T-HANDLE LATCH
	43	29148	2	BUMPER,RUBBER HOLLOW STEM
	44	5223920	1	HINGE, ENGINE DOOR, A9T
	45	525817	1	WELD, ENGINE DOOR, A SERIES
	46	67127	2	GAS SPRING, 28" EXT, GV
	47	67128	4	ROD END, BALL JOINT, M8
*	48	204W53	1	KIT,HOSE A9T DUMP DOOR ORFS

	ITEM NO.	PART NO.	QTY.	DESCRIPTION
	1	525898	1	HOPPER WELD, A9T, 304SS
	2	5215010	1	COVER,HOPPER TOOLBOX,A7000
	3	524920	1	WELD, SEPERATOR DOOR, A9
	4	204Q77	1	BRAKE LIGHT, REAR CENTER ASSY
	5	523156	1	TUBE HOPPER INTAKE BOLT-IN A7
	6	29494	1	SEAL,BOLT-IN INTAKE TUBE,A7000
	7	54310	1	SEAL,INTAKE,A7000 BOLT-IN INTAKE TUBE
	8	520311	2	HOPPER, MTG, PIN
	9	55625	2	LIGHT, 6.5" WIDE, RED LED
	10	5223342	2	DOOR, CYLINDER BOX, 3CR12
	11	5201914	1	HOPPER PROP LATCH HOOK, A7,
	12	523239	2	WELD, HINGE, D/D, A9-08
	13	203L95	1	HOPPER, DUMP DOOR ASSY, SS
	14	5214014	2	DUMP DOOR HINGE PIN
	15	23514	2	FITTING, 1/4-28 GREASE 90°
	16	5222213	2	WIRE COVER PLT,HOPPER,A9,3CR12
	17	204M27	2	CYLINDER, A9 DOOR ASSY, ORFS
	18	54710	4	3/4 X 2 CLEVIS PIN
	19	24029	2	MUDFLAP, 24 X 24 X 7/16
	20	20814-3	8	CHAIN,1/4" 3 LINKS
	21	5207106	1	MAT, TOOL BOX
	22	204M29	1	VALVE, SEQUENCE A9 DOOR
	23	204W45	1	CYLINDER,DR LTCH C-BAL A7/A9
	24	204M66	1	HOPPR,TOOLBOX DR ASSY,A9,3CR12
	25	61704	1	TURCK PRX SWITCH & BRKT
	26	5222151	1	A9, PROX BRACKET, DOOR 3CR12
	27	5222150	1	A9,PROX SENSE PLATE,DOOR,3CR12
	28	28431	4	CLAMP, TOP 1/2" HARDLINE
	29	28432	8	CLAMP, 1/2" TUBE, HALVES, TWIN
	30	59875	2	GROMMET, OVAL 6"
	31	65462	2	TEE, 3/8" BULKHEAD MORFS
	32	66306	2	TEE,3/8" ORF SWIVEL NUT BRANCH
*	33	20212	2	3/8 JIC, SW-NUT, BR-TEE
*	34	21530	2	TEE, 3/8" JIC UNION BULKHEAD
*	35	29256	1	KIT, HOPPER WATER SYSTEM
	36	3001957	2	SPACER,HINGE, 1/4- A9-09
	37	3001958	2	SPACER,HINGE, 3/8- A9-09
	38	22738	4	CLIP, 1-3/16" E
	39	204M95	2	INSPECTION DOOR ASSY,CURB SIDE
	40	5218768	4	SPACER, HOPPER LATCH
	41	204U72	1	INSTALL, CUMMINS LIMB GUARD

* COMPONENTS NOT SHOWN

204V16 - HOPPER ASSY A9T,E-A,CUMMINS,304S

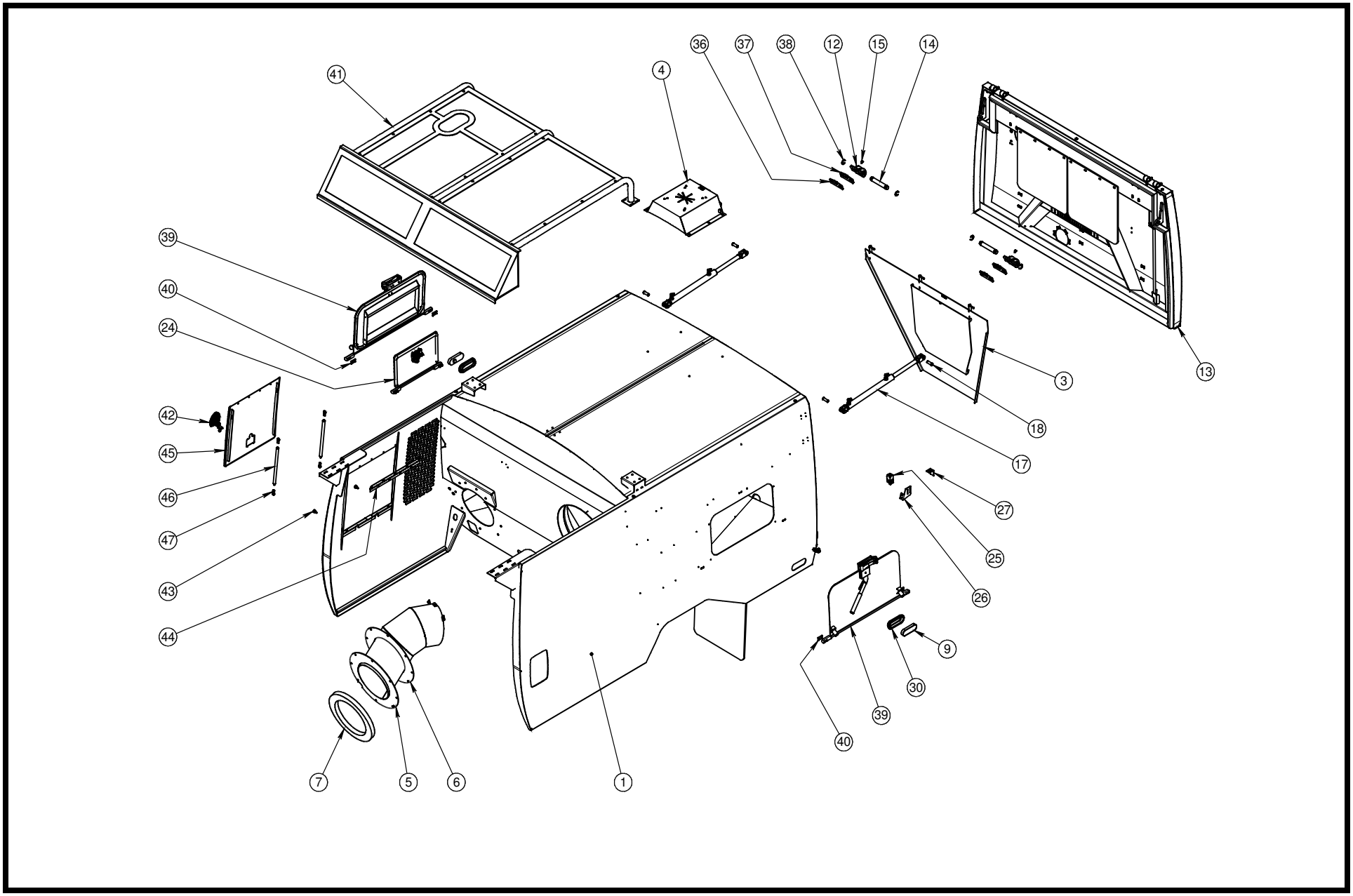

204V16 - HOPPER ASSY A9T,E-A,CUMMINS,304S

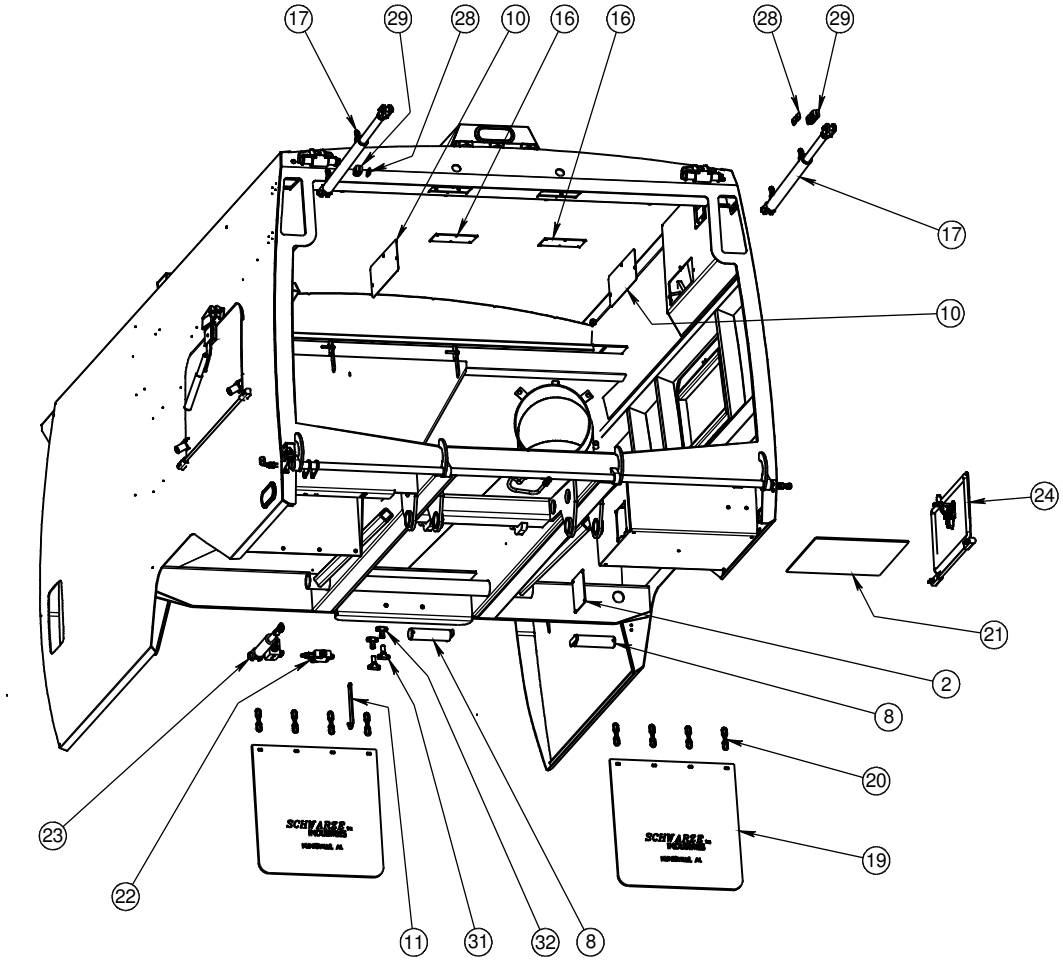

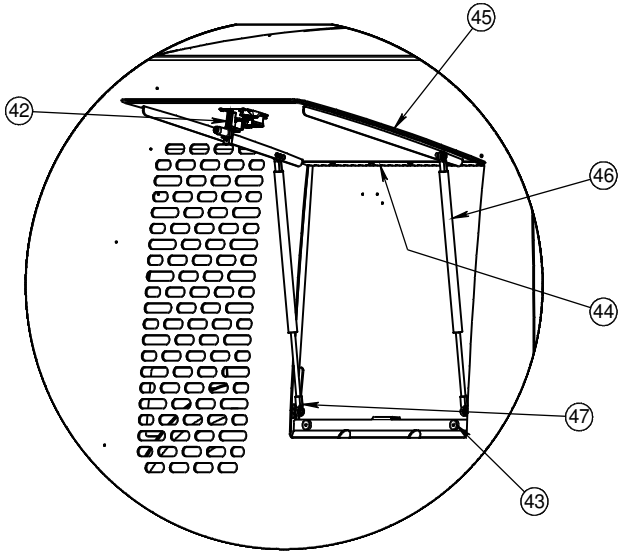

ENGINE ACCESS DOOR DETAIL

204V05 - HOPPER ASSY A9T,E-A,CUMMINS,3CR12

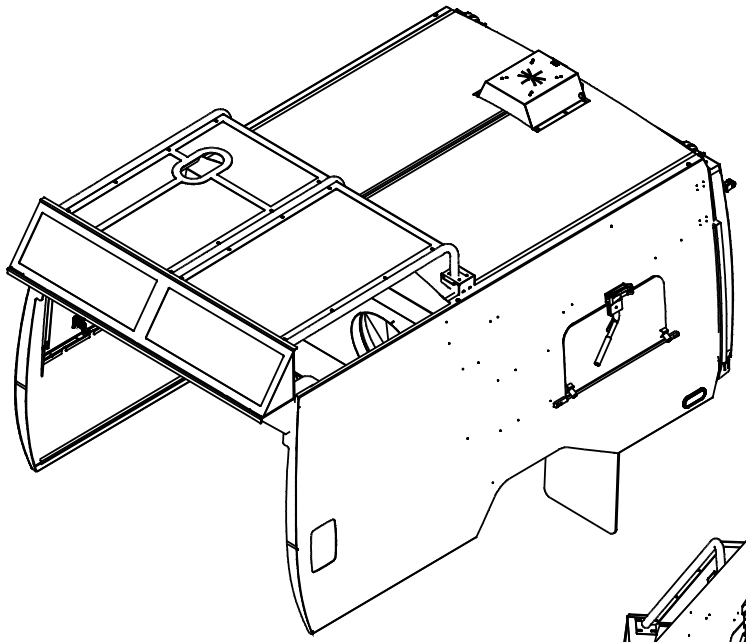

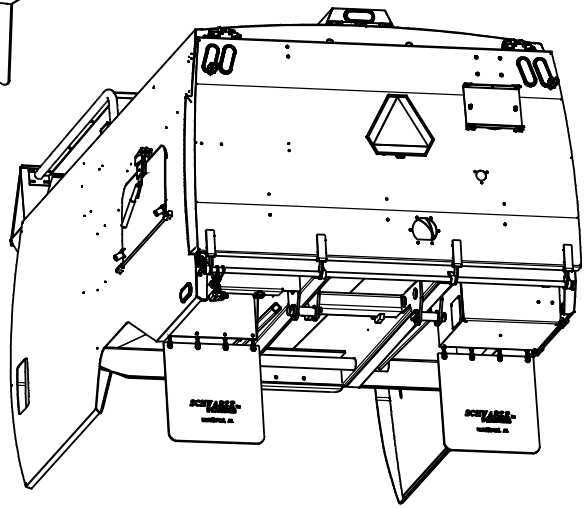

	ITEM NO.	PART NO.	QTY.	DESCRIPTION
	42	29138	1	T-HANDLE LATCH
	43	29148	2	BUMPER,RUBBER HOLLOW STEM
	44	5223920	1	HINGE, ENGINE DOOR, A9T
	45	525817	1	WELD, ENGINE DOOR, A SERIES
	46	67127	2	GAS SPRING, 28" EXT, GV
	47	67128	4	ROD END, BALL JOINT, M8
*	48	204W53	1	KIT,HOSE A9T DUMP DOOR ORFS

	ITEM NO.	PART NO.	QTY.	DESCRIPTION
	1	525899	1	WLD,HPPR,E-A, A9T, 3CR12
	2	5215010	1	COVER,HOPPER TOOLBOX,A7000
	3	524920	1	WELD, SEPERATOR DOOR, A9
	4	204Q77	1	BRAKE LIGHT, REAR CENTER ASSY
	5	523156	1	TUBE HOPPER INTAKE BOLT-IN A7
	6	29494	1	SEAL,BOLT-IN INTAKE TUBE,A7000
	7	54310	1	SEAL,INTAKE,A7000 BOLT-IN INTAKE TUBE
	8	520311	2	HOPPER, MTG, PIN
	9	55625	2	LIGHT, 6.5" WIDE, RED LED
	10	5223342	2	DOOR, CYLINDER BOX, 3CR12
	11	5201914	1	HOPPER PROP LATCH HOOK, A7,
	12	523239	2	WELD, HINGE, D/D, A9-08
	13	204M61	1	HOPPER,DUMP DOOR ASSY,A9,3CR12
	14	5214014	2	DUMP DOOR HINGE PIN
	15	23514	2	FITTING, 1/4-28 GREASE 90°
	16	5222213	2	WIRE COVER PLT,HOPPER,A9,3CR12
	17	204M27	2	CYLINDER, A9 DOOR ASSY, ORFS
	18	54710	4	3/4 X 2 CLEVIS PIN
	19	24029	2	MUDFLAP, 24 X 24 X 1/4
	20	20814-3	8	CHAIN,1/4" 3 LINKS
	21	5207106	1	MAT, TOOL BOX
	22	204M29	1	VALVE, SEQUENCE A9 DOOR
	23	204W45	1	CYLINDER,DR LTCH C-BAL A7/A9
	24	204M66	1	HOPPR,TOOLBOX DR ASSY,A9,3CR12
	25	61704	1	TURCK PRX SWITCH & BRKT
	26	5222151	1	A9, PROX BRACKET, DOOR 3CR12
	27	5222150	1	A9,PROX SENSE PLATE,DOOR,3CR12
	28	28431	4	CLAMP, TOP 1/2" HARDLINE
	29	28432	8	CLAMP, 1/2" TUBE, HALVES, TWIN
	30	59875	2	GROMMET, OVAL 6"
	31	65462	2	TEE, 3/8" BULKHEAD MORFS
	32	66306	2	TEE,3/8" ORF SWIVEL NUT BRANCH
	33	22738	4	CLIP, 1-3/16" E
*	34	20212	2	3/8 JIC, SW-NUT, BR-TEE
*	35	21530	2	TEE, 3/8" JIC UNION BULKHEAD
*	36	29256	1	KIT, HOPPER WATER SYSTEM
	37	3001957	2	SPACER,HINGE, 1/4- A9-09
	38	3001958	2	SPACER,HINGE, 3/8- A9-09
	39	204M95	2	INSPECTION DOOR ASSY,CURB SIDE
	40	5218768	4	SPACER, HOPPER LATCH
	41	204U72	1	INSTALL, CUMMINS LIMB GUARD

* COMPONENTS NOT SHOWN

204V05 - HOPPER ASSY A9T,E-A,CUMMINS,3CR12

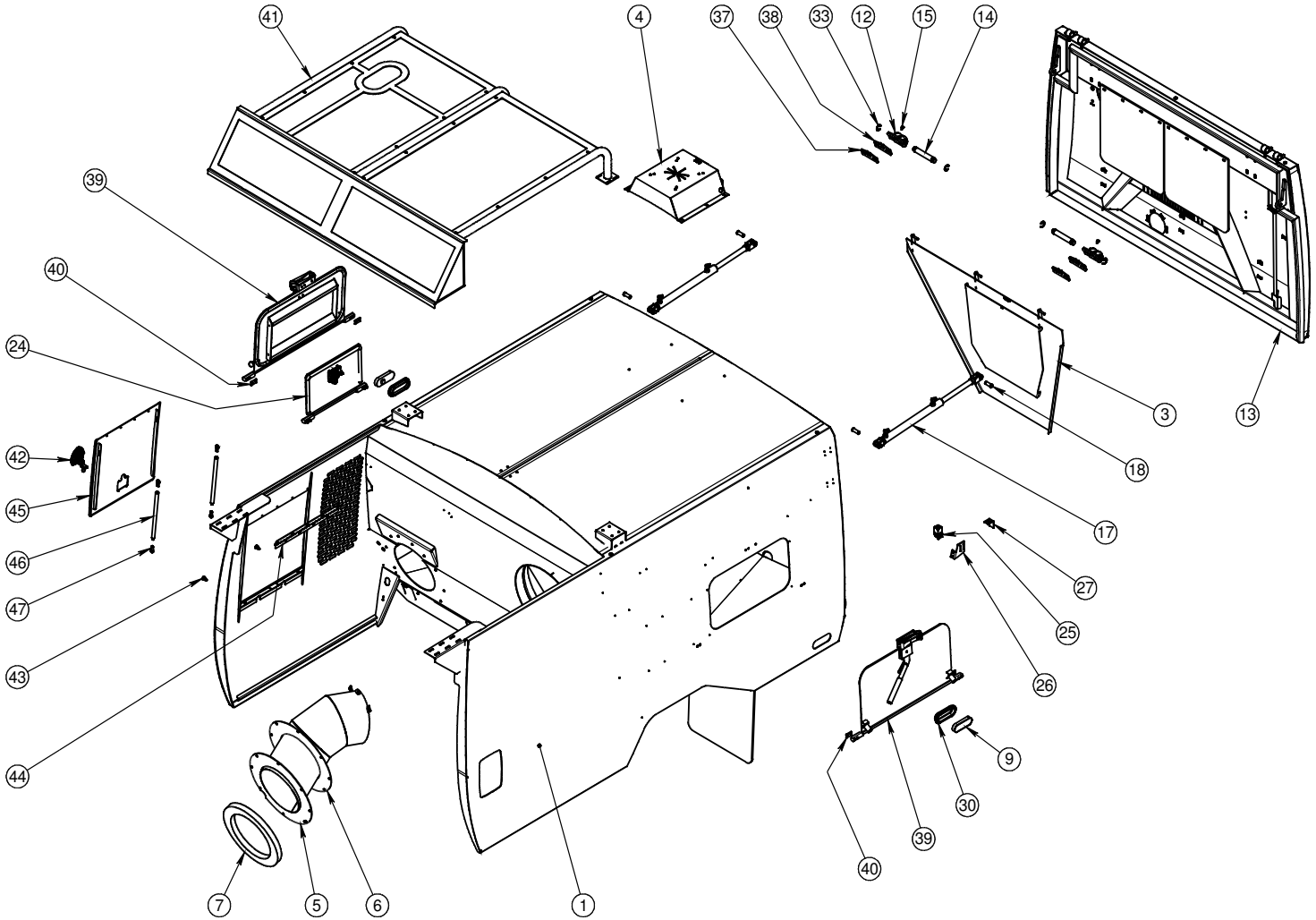

204V05 - HOPPER ASSY A9T,E-A,CUMMINS,3CR12

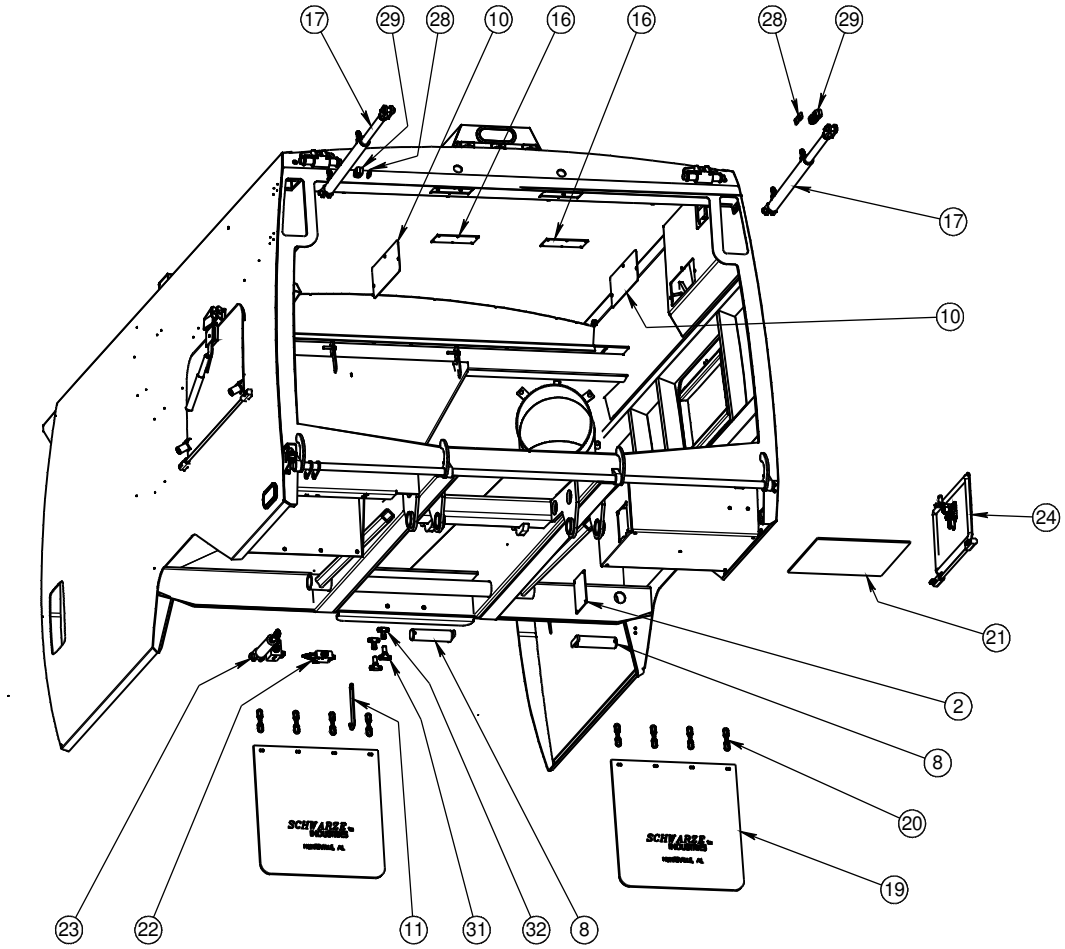

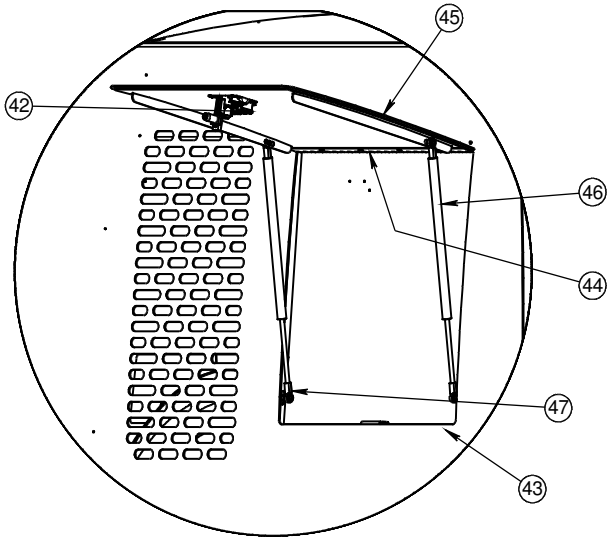

ENGINE ACCESS DOOR DETAIL

Broom(s)

4

204K02 - GUTTER BROOM, LH KIT

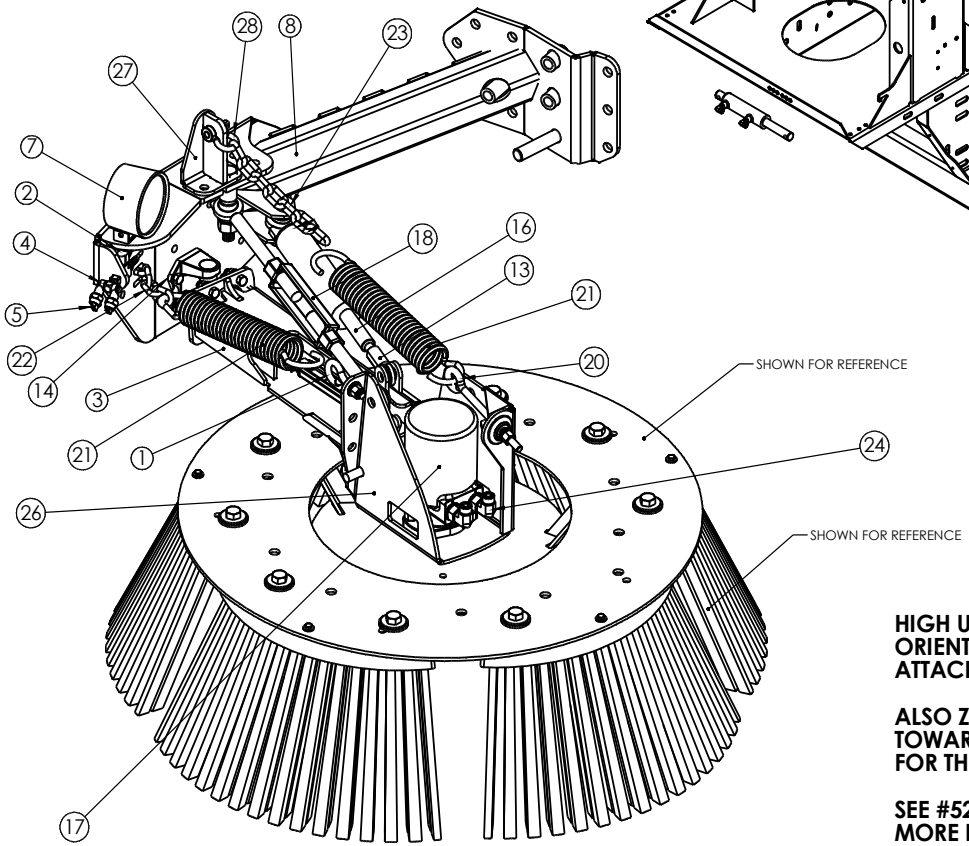

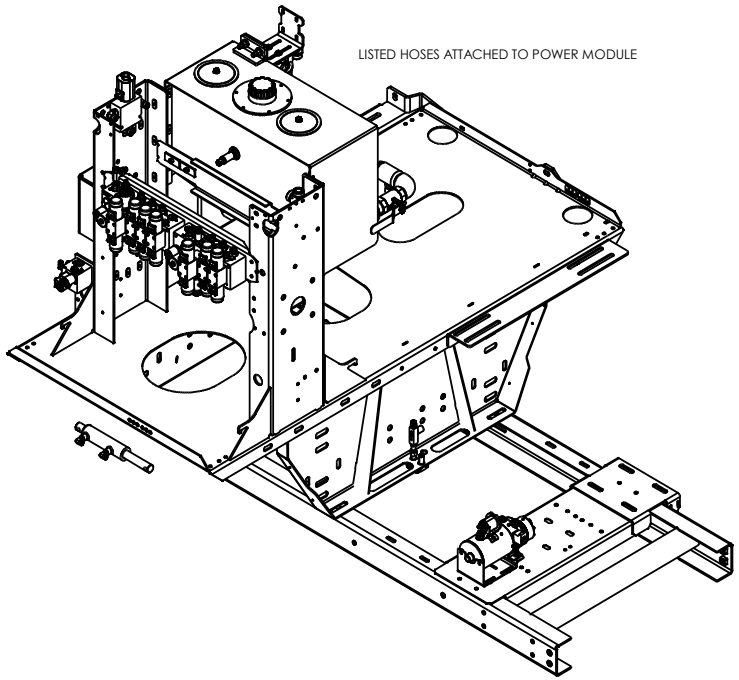

ITEM NO.	PART NUMBER	QTY.	DESCRIPTION
1	30284	1	SCREW, 1/2-13 X 2 EYEBOLT BENT
2	20133	1	ELBOW,90,1/4 MNPT X FNPT
3	523440	1	ARM, WELD, LH, G/B
4	20463	1	SPRAY TIP, DOUBLE SWIVEL
5	22542	2	SPRAY TIP YELLOW
6	27598	2	WATER FILTER 100 MEST
7	61541	1	LED PAR 36 FLOOD LIGHT
8	523475	1	BRACKET ASSY, GB, LH
9	26965	1	TEE, STREET RUN 1/4 NPT
10	26930	2	1/4" MNPT X 3/8" PUSH-LOK
11	521852	1	LEVER, PIVOT, LH, TILT
12	522209	1	TEE PIN G/B SPRING RETAINER
13	5207160	1	5/8-18 ROD END DRILLED & TAPPED
14	523432	1	HIGH U-JOUNT ASSY
15	21930	1	PLUG, 1/4" NPT VENTED PIPE
16	521093	1	CYLINDER 2 X 5 BROOM INNER
17	64903	1	MOTOR, GUTTER BROOM
18	522374	1	TURNBUCKLE, 7/8
19	522819	1	TILT, ADJUST, 5/8, TURNBUCKLE
20	65597	1	EYEBOLT 1/2-13 X 6" LONG, T3
21	21478	2	SPRING, 2" X 12"
22	20816-4	1	CHAIN, 5/16, 5-7/8" LONG
23	20816-7	1	CHAIN, 5/16, 9-7/8" LONG
24	61047	2	ELBOW,90 1/2 MORFS X 5/8 MORB
25	65766	1	ELBOW, 90° 1/4 MORFS X 1/4 NP
26	525780	1	GB, MOTOR WELD, LH
27	522713	1	SPRING BRACKET, LH, DOWN PRESS
28	23450	1	SHACKLE,3/8

ITEMS NOT SHOWN (COMPONENTS)

ITEM NO.	PART NUMBER	QTY.	DESCRIPTION
29	20408	1	SPRAY, TIP 1/4 MPT
30	20420	1	SPRAY TIP RETAINER
31	20407	1	SPRAY TIP FILTER, 100 MESH
32	20441	1	SPRAY TIP, BRASS 8002
33	64610	1	WEDGELOCK, 2 WAY RECEPTACLE, D
34	64595	1	CONNECTOR, 2 WAY RECEPTACLE
35	25092	1	CLAMP, 2" COATED
36	22473	2	NIPPLE,1/4 NPT HEX BRASS
37	20143	1	ELBOW, 45, 14 NPT STREET BRASS

KIT NOT SHOWN

ITEM NO.	PART NUMBER	QTY.	DESCRIPTION
38	204k91	1	GB TILT, POWER, LH ONLY

ITEMS NOT SHOWN (HOSES)

ITEM NO.	PART NUMBER	QTY.	DESCRIPTION
39	524965	1	HOSE,RH TLT MAN T - RR MAN T3
40	524966	1	HOSE, FR MAN A3 TO LH GB MTR
41	524967	1	HOSE, FR MAN B3 TO LH GB MTR
42	525002	1	HOSE, MAN TO LH GB CYL

HIGH U-JOINT ASSEMBLY, #523432 MUST BE ORIENTED SUCH THAT LONGER SWIVEL IS ATTACHED TO BRACKET ASSEMBLY #523475

ALSO ZERK FOR GREASE IN U-JOINT IS ALWAYS TOWARDS OUTSIDE (LEFT) SIDE OF TRUCK FOR THIS ASSEMBLY

SEE #523432 DRAWING FOR MORE INSTRUCTIONS

204K02 - GUTTER BROOM, LH KIT

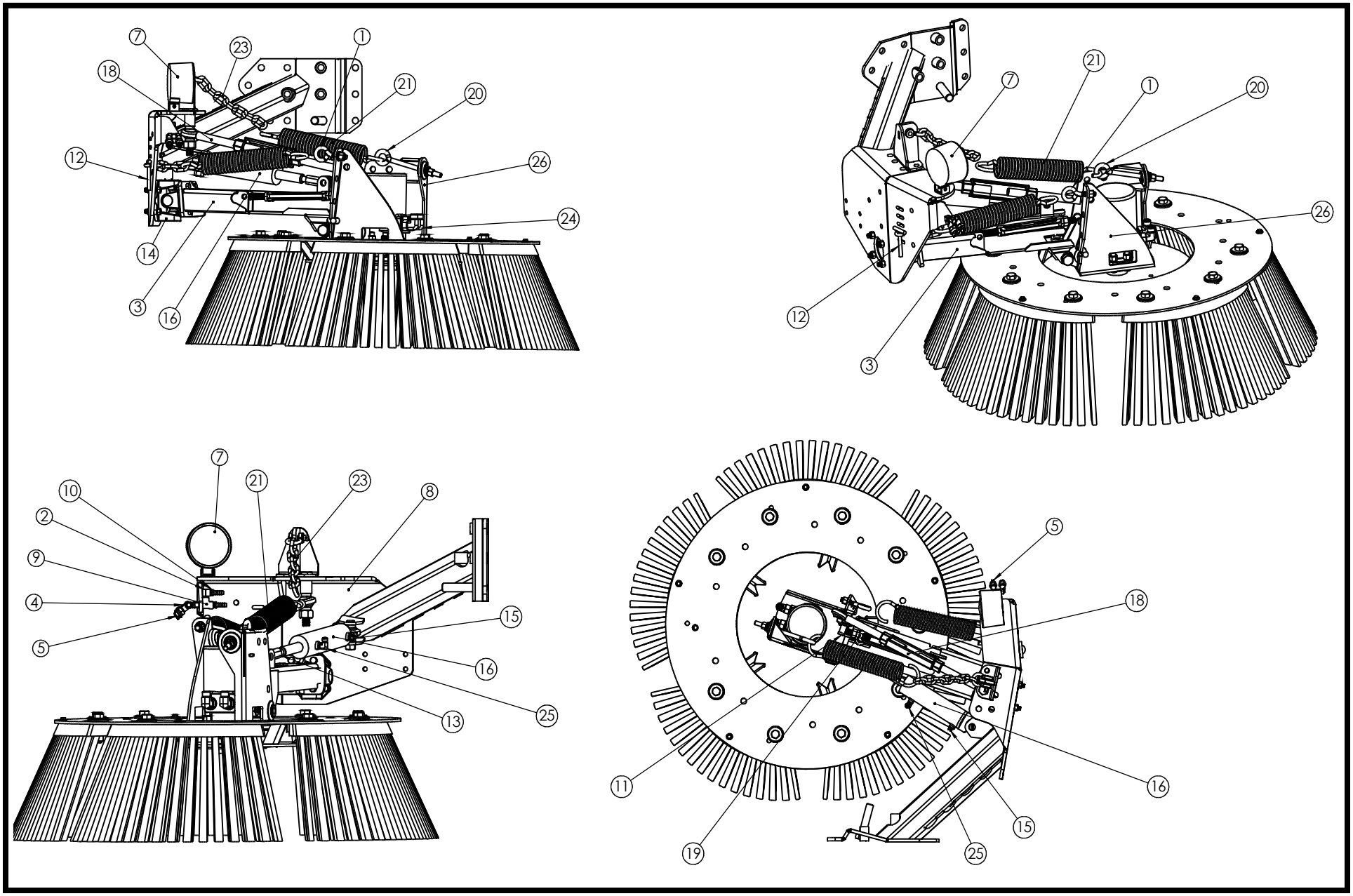

204K02 - GUTTER BROOM, LH KIT

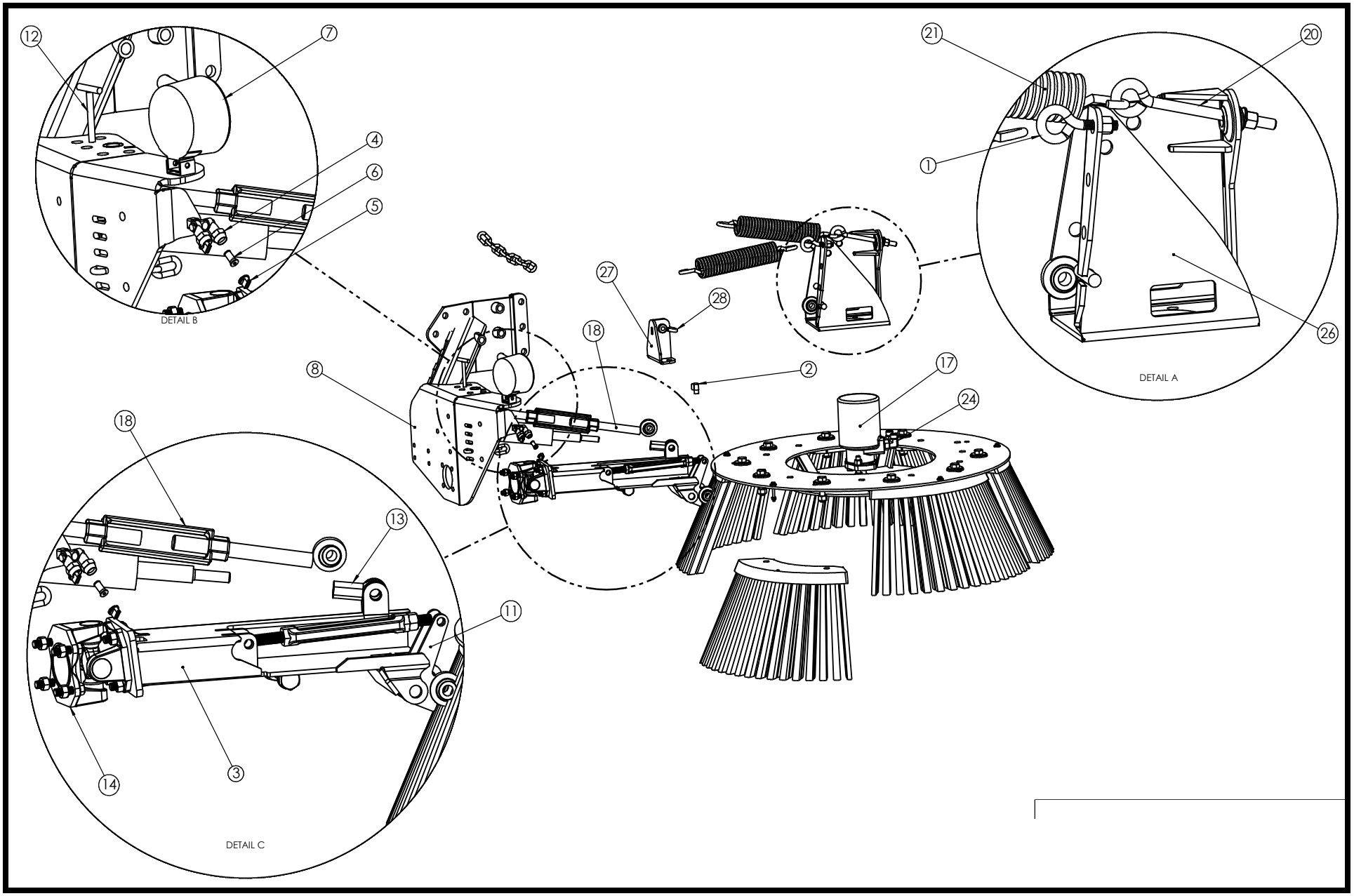

204K02 - GUTTER BROOM, LH KIT

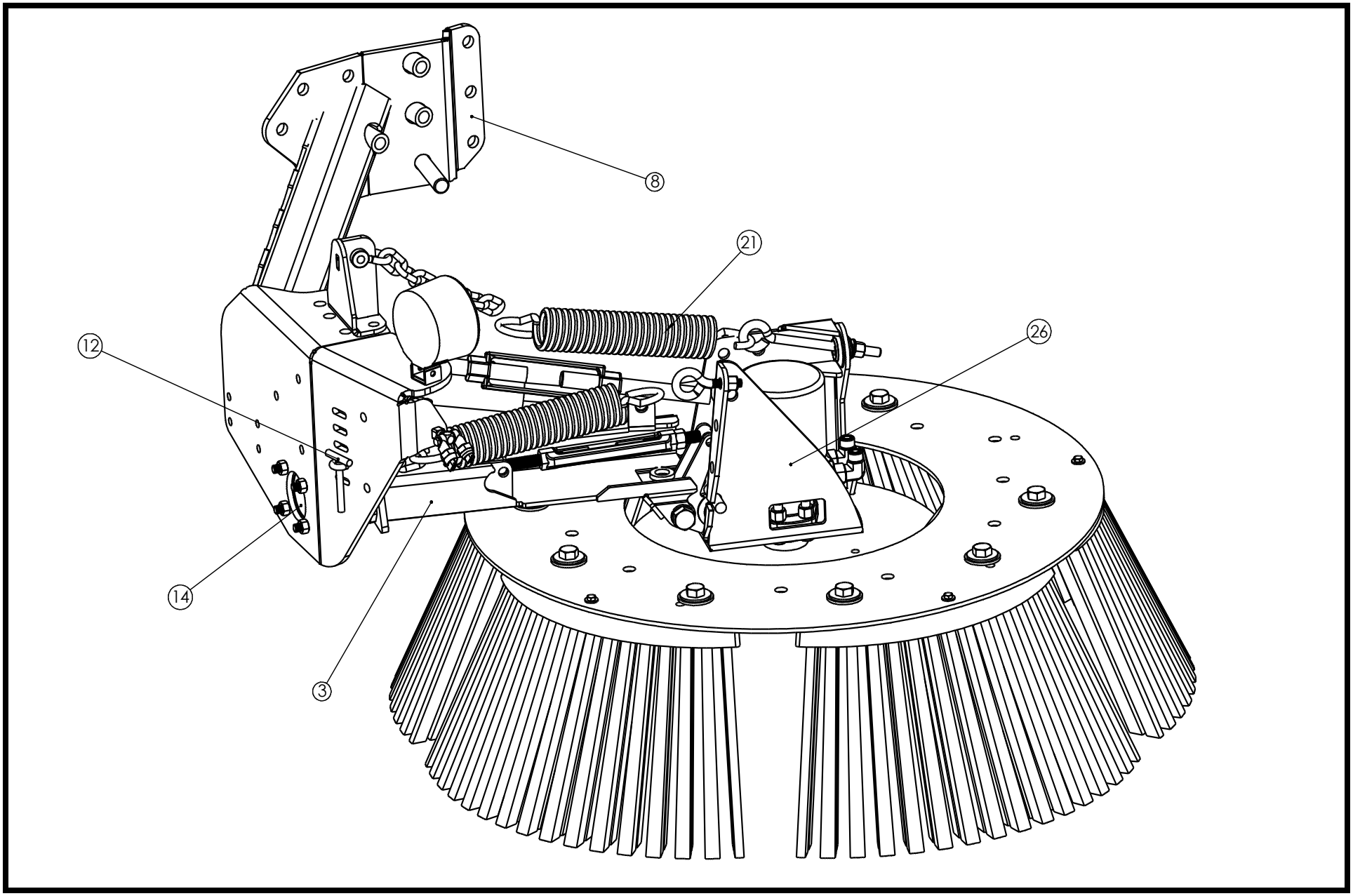

204K03 - GUTTER BROOM, RH KIT

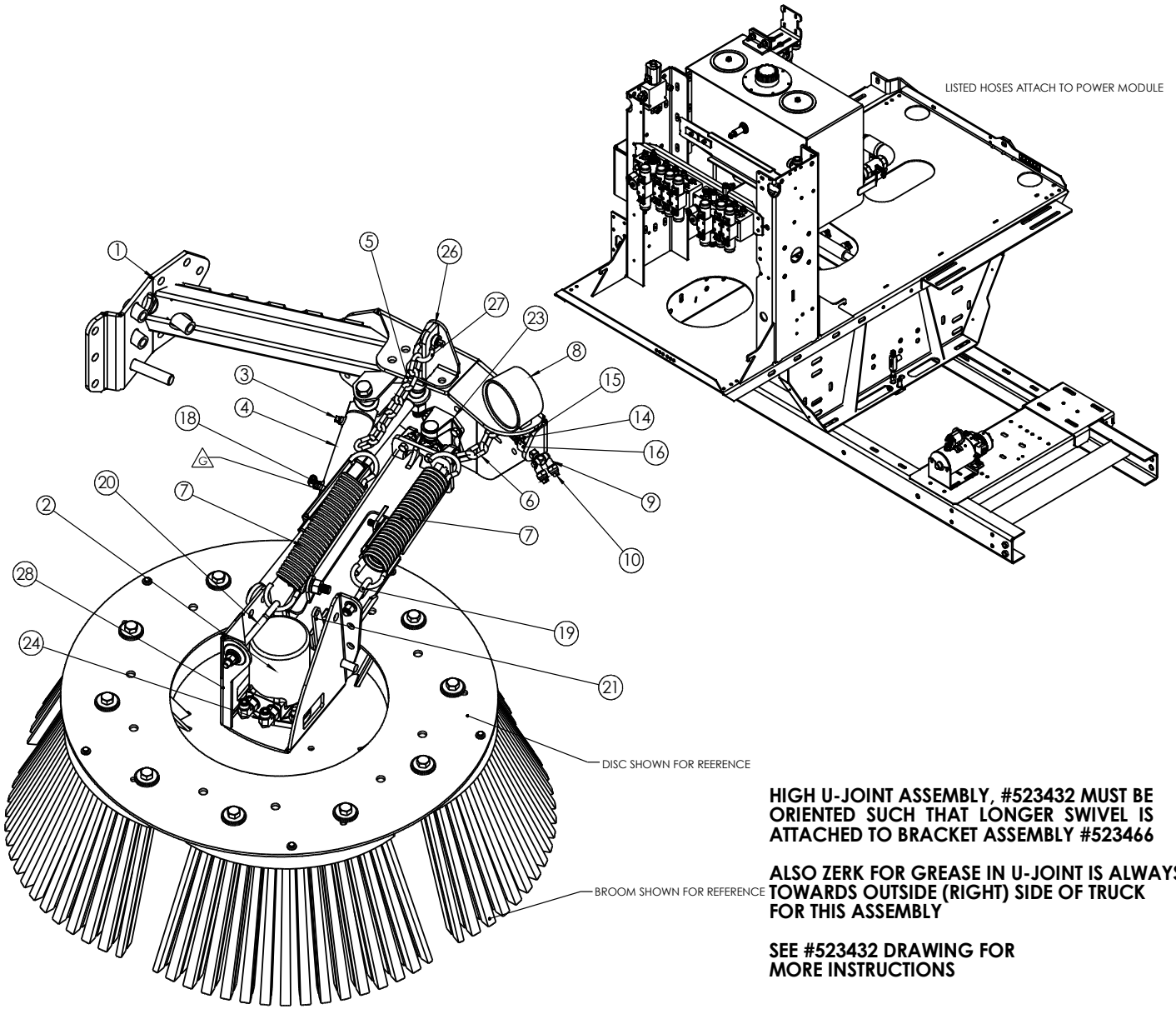

ITEM NO.	PART NUMBER	QTY.	DESCRIPTION
1	523466	1	BRACKET ASSY, GB, RH
2	64903	1	MOTOR, GUTTER BROOM
3	21930	1	PLUG, 1/4" NPT VENTED PIPE
4	521093	1	CYLINDER 2 X 5 BROOM INNER
5	20816-7	1	CHAIN, 5/16, 9-7/8" LONG
6	20816-4	1	CHAIN, 5/16, 5-7/8" LONG
7	21478	2	SPRING, 2" X 12"
8	61541	1	LED PAR 36 FLOOD LIGHT
9	20463	1	SPRAY TIP, DOUBLE SWIVEL
10	22542	2	SPRAY TIP YELLOW
11	27598	2	WATER FILTER 100 MEST
12	522209	1	TEE PIN G/B SPRING RETAINER
13	5207160	1	5/8-18 ROD END DRILLED & TAPPED
14	26930	3	1/4" MNPT X 3/8" PUSH-LOK
15	20133	1	ELBOW,90,1/4 MNPT X FNPT
16	26965	1	TEE, STREET RUN 1/4 NPT
17	523441	1	ARM, WELD, RH, G/B
18	522374	1	TURNBUCKLE, 7/8
19	30284	1	SCREW, 1/2-13 X 2 EYEBOLT BENT
20	65597	1	EYEBOLT 1/2-13 X 6" LONG, T3
21	521853	1	LEVER, PIVOT, RH, TILT
22	522819	1	TILT, ADJUST, 5/8, TURNBUCKLE
23	523432	1	HIGH U-JOUNT ASSY
24	61047	2	ELBOW,90 1/2 MORFS X 5/8 MORB
25	65766	1	ELBOW, 90° 1/4 MORFS X 1/4 NP
26	522714	1	SPRING BRACKET, RH, DOWN PRESS
27	23450	1	SHACKLE,3/8
28	525781	1	GB, MOTOR WELD, RH

ITEMS NOT SHOWN (COMPONENTS)

ITEM NO.	PART NUMBER	QTY.	DESCRIPTION
29	64595	1	CONNECTOR, 2 WAY RECEPTACLE
30	64610	1	WEDGELOCK, 2 WAY RECEPTACLE, D
31	25092	3	CLAMP, 2" COATED
32	20407	2	SPRAY TIP FILTER, 100 MESH

KIT NOT SHOWN

ITEM NO.	PART NUMBER	QTY.	DESCRIPTION
33	204K92	1	GB TILT, POWER, RH ONLY

ITEMS NOT SHOWN (HOSES)

ITEM NO.	PART NUMBER	QTY.	DESCRIPTION
34	524962	1	HOSE, RR MAN A3 TO RH GB MTR
35	524963	1	HOSE, RR MAN B3 TO RH GB MTR
36	524964	1	HOSE, RR MAN V TO RH GB CYL
37	20408	1	SPRAY, TIP 1/4 MPT
38	20441	1	SPRAY TIP, BRASS 8002
39	20420	1	SPRAY TIP RETAINER

HIGH U-JOINT ASSEMBLY, #523432 MUST BE ORIENTED SUCH THAT LONGER SWIVEL IS ATTACHED TO BRACKET ASSEMBLY #523466

ALSO ZERK FOR GREASE IN U-JOINT IS ALWAYS TOWARDS OUTSIDE (RIGHT) SIDE OF TRUCK FOR THIS ASSEMBLY

SEE #523432 DRAWING FOR MORE INSTRUCTIONS

204K03 - GUTTER BROOM, KIT

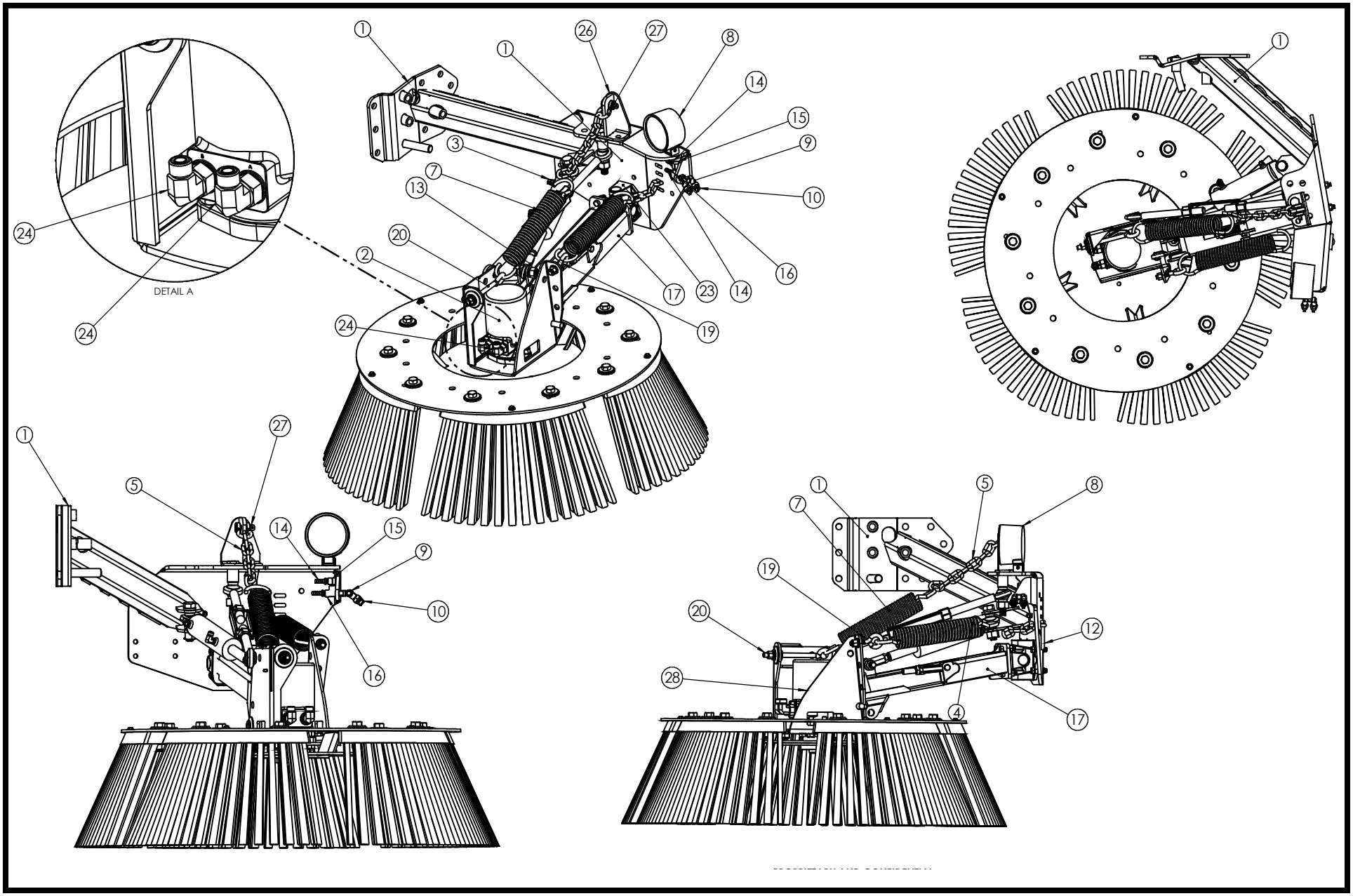

204K03 - GUTTER BROOM, KIT

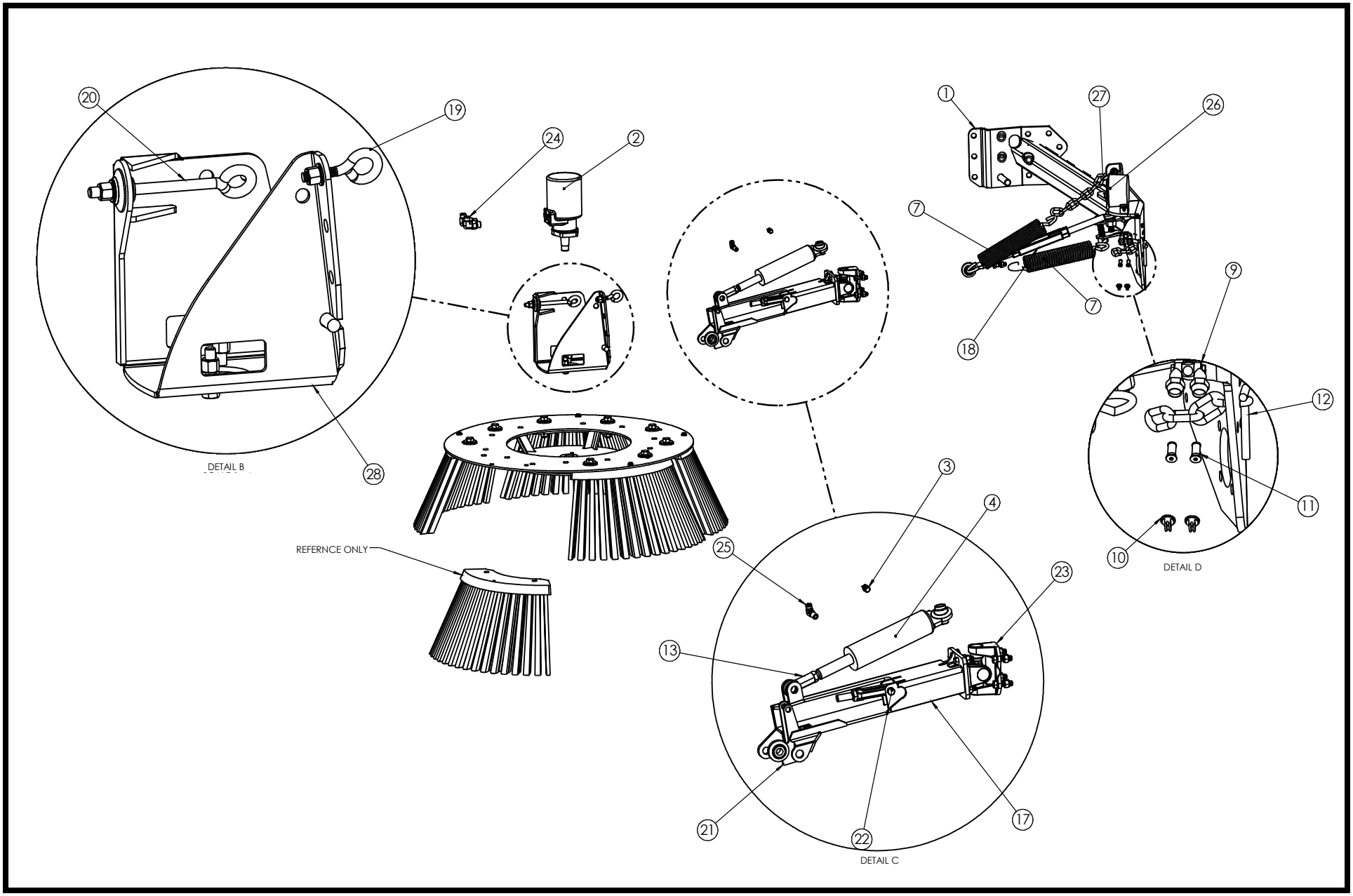

204K03 - GUTTER BROOM, KIT

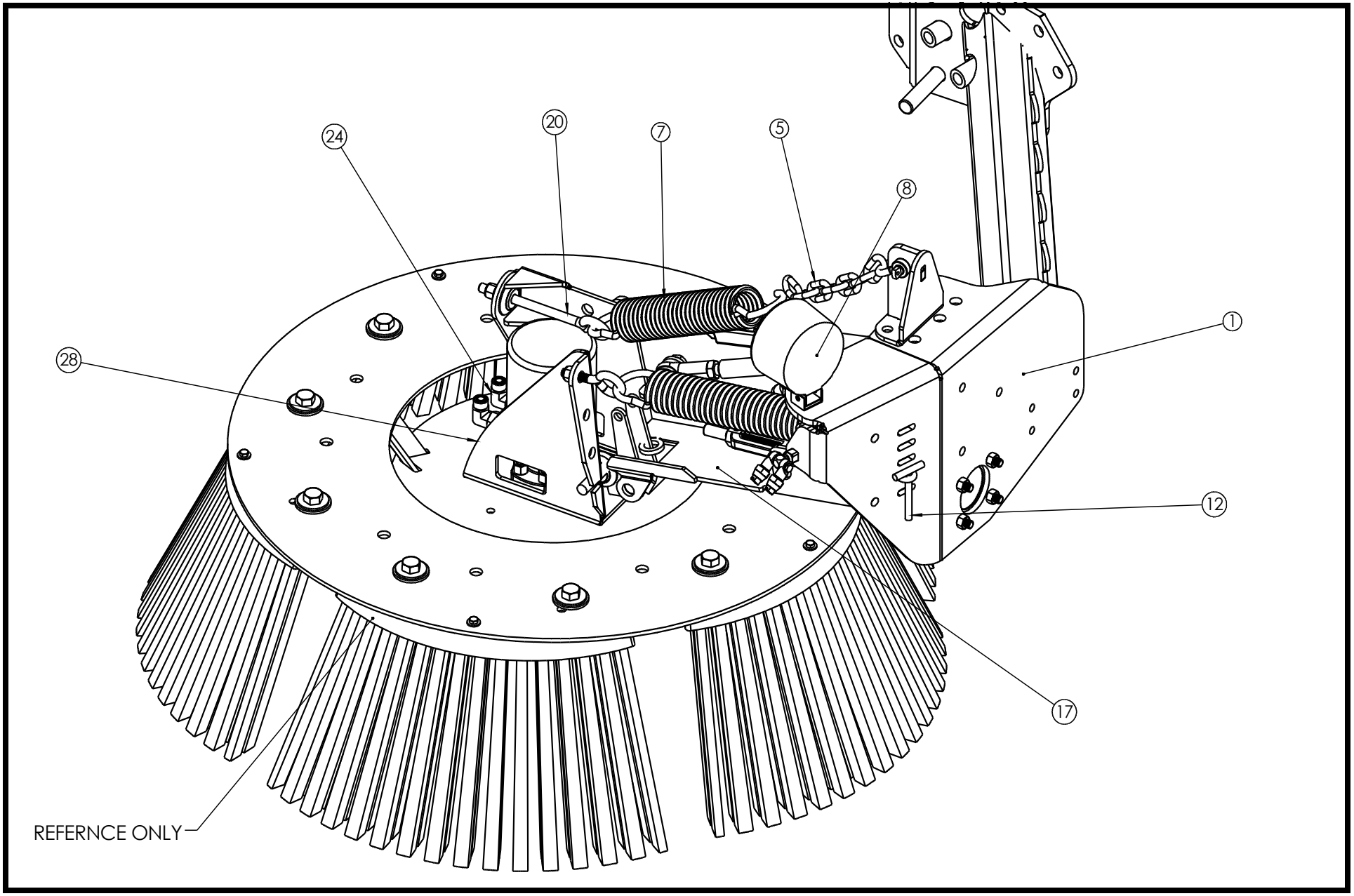

204K68 - GUTTER BROOM, AUTOCAR

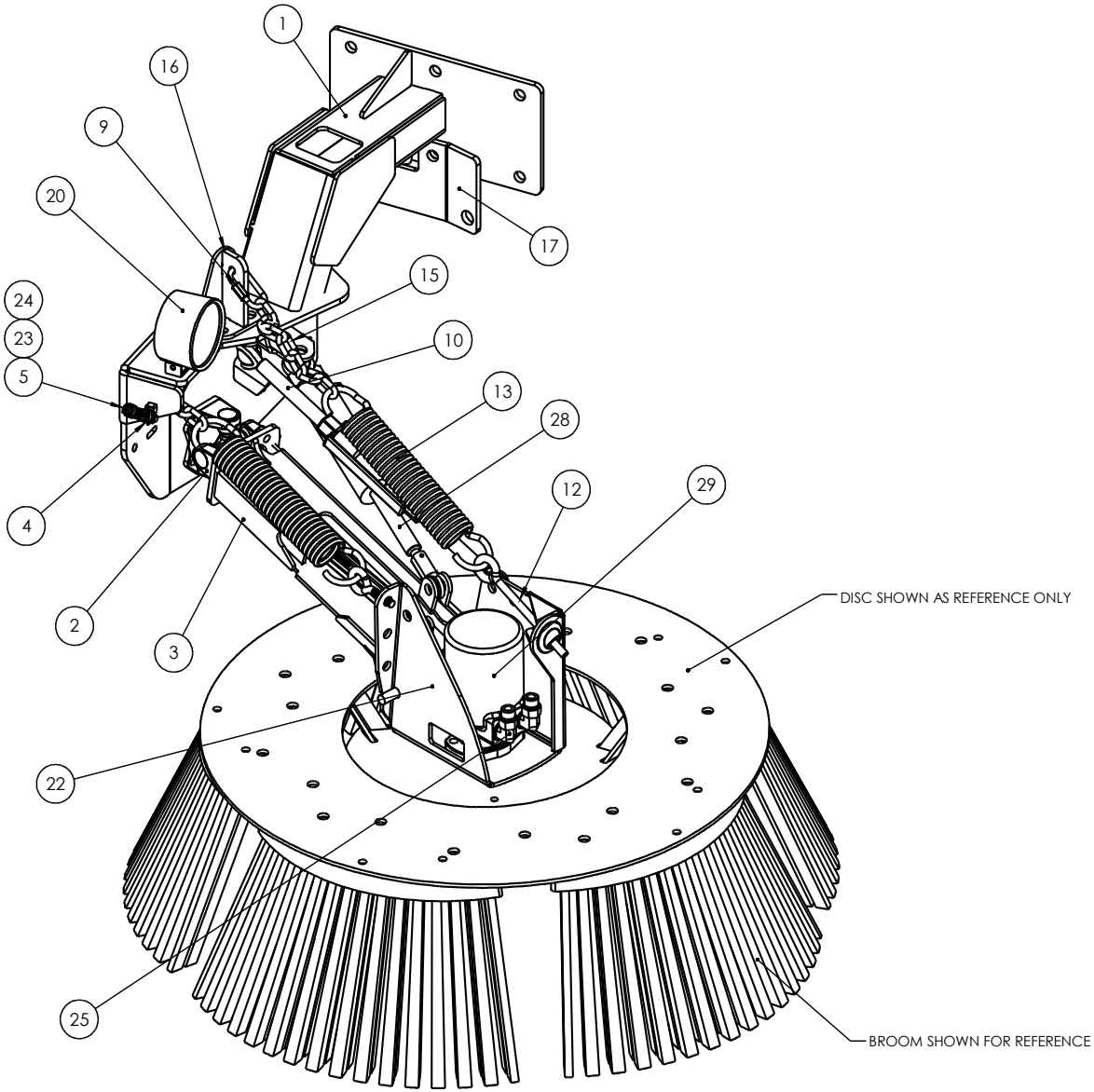

ITEM NO.	PART NUMBER	QTY.	DESCRIPTION
1	524578	1	BKT, G/B, LH, A7, AUTOCAR
2	523432	1	HIGH U-JOUNT ASSY
3	523440	1	ARM, WELD, LH, G/B
4	20463	1	SPRAY TIP, DOUBLE SWIVEL
5	22542	2	SPRAY TIP YELLOW
6	27598	2	WATER FILTER 100 MEST
7	521852	1	LEVER, PIVOT, LH, TILT
8	522209	1	TEE PIN G/B SPRING RETAINER
9	21924	1	ATTACH LINK
10	522374	1	TURNBUCKLE, 7/8
11	522819	1	TILT, ADJUST, 5/8, TURNBUCKLE
12	65597	1	EYEBOLT 1/2-13 X 6" LONG, T3
13	21478	2	SPRING, 2" X 12"
14	20816-4	1	CHAIN, 5/16, 5-7/8" LONG
15	20816-7	1	CHAIN, 5/16, 9-7/8" LONG
16	522713	1	SPRING BRACKET, LH, DOWN PRESS
17	5219621	1	BRKT, DRAG ARM, LH, AUTOCAR
18	20133	1	ELBOW,90,1/4 MNPT X FNPT
19	30284	1	SCREW, 1/2-13 X 2 EYEBOLT BENT
20	61541	1	LED PAR 36 FLOOD LIGHT
21	65766	1	ELBOW, 90° 1/4 MORFS X 1/4 NP
22	525780	1	GB, MOTOR WELD, LH
23	26965	1	TEE, STREET RUN 1/4 NPT
24	26930	3	1/4" MNPT X 3/8" PUSH-LOK
25	61047	2	ELBOW,90 1/2 MORFS X 5/8 MORB
26	5207160	1	5/8-18 ROD END DRILLED & TAPPED
27	21930	1	PLUG, 1/4" NPT VENTED PIPE
28	521093	1	CYLINDER 2 X 5 BROOM INNER
29	64903	1	MOTOR, GUTTER BROOM

ITEMS NOT SHOWN (COMPONENTS)

ITEM NO.	PART NUMBER	QTY.	DESCRIPTION
30	68228	2	ISO, FANTIP CAP/GASKET-BLACK
31	21707	1	DEFLETOR FLAP
32	64595	1	CONNECTOR, 2 WAY RECEPTACLE
33	64610	1	WEDGELOCK, 2 WAY RECEPTACLE, D

KITS NOT SHOWN

ITEM NO.	PART NUMBER	QTY.	DESCRIPTION
34	203667	1	CONSOLE KIT, LHS G/B, A7
35	204k91	1	GB TILT, POWER, LH ONLY

ITEMS NOT SHOWN (HOSES)

ITEM NO.	PART NUMBER	QTY.	DESCRIPTION
36	524966	1	HOSE, FR MAN A3 TO LH GB MTR
37	524967	1	HOSE, FR MAN B3 TO LH GB MTR
38	525002	1	HOSE, MAN TO LH GB CYL

204K68 - GUTTER BROOM, LH AUTOCAR

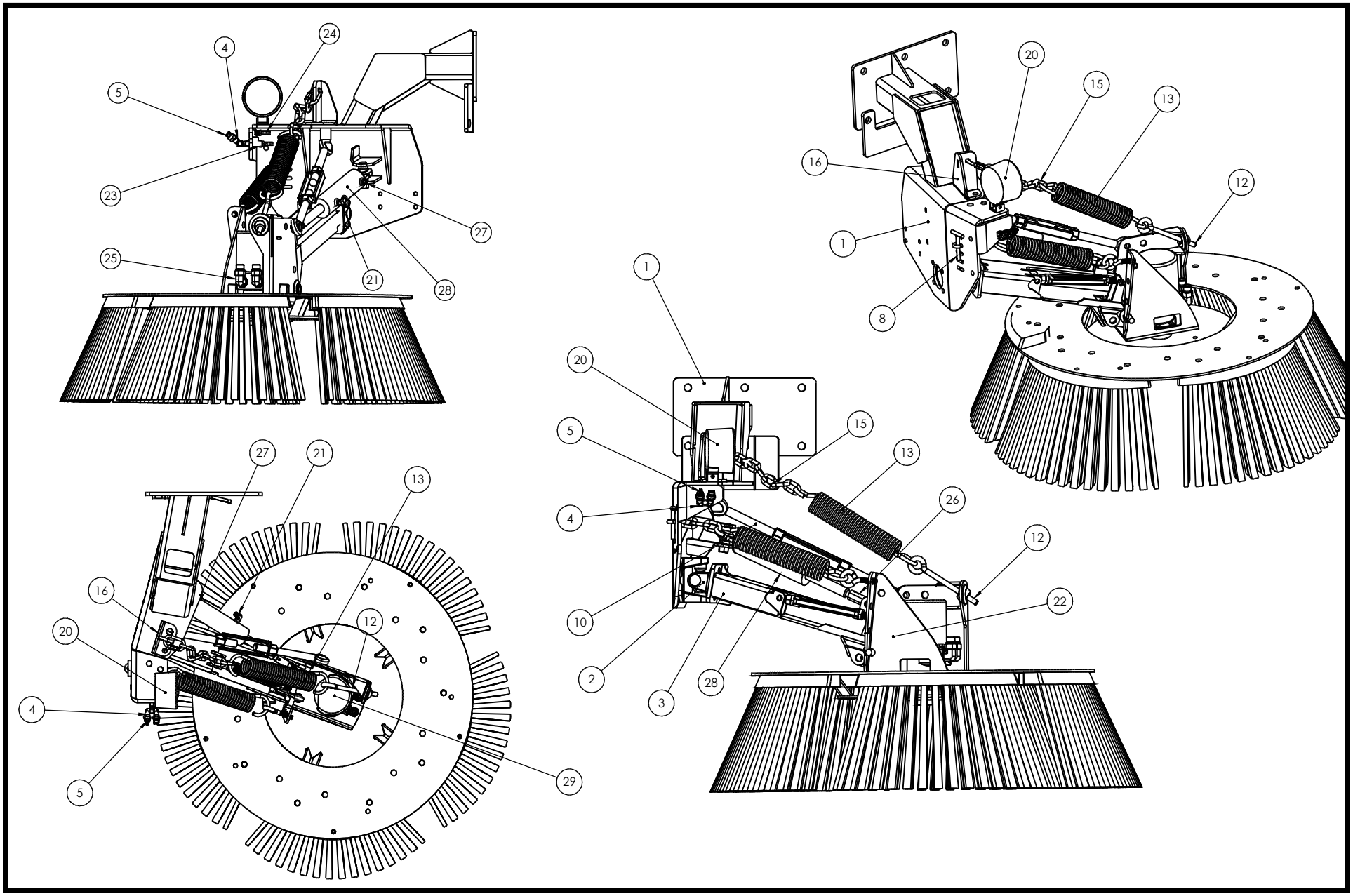

204K68 - GUTTER BROOM, AUTOCAR

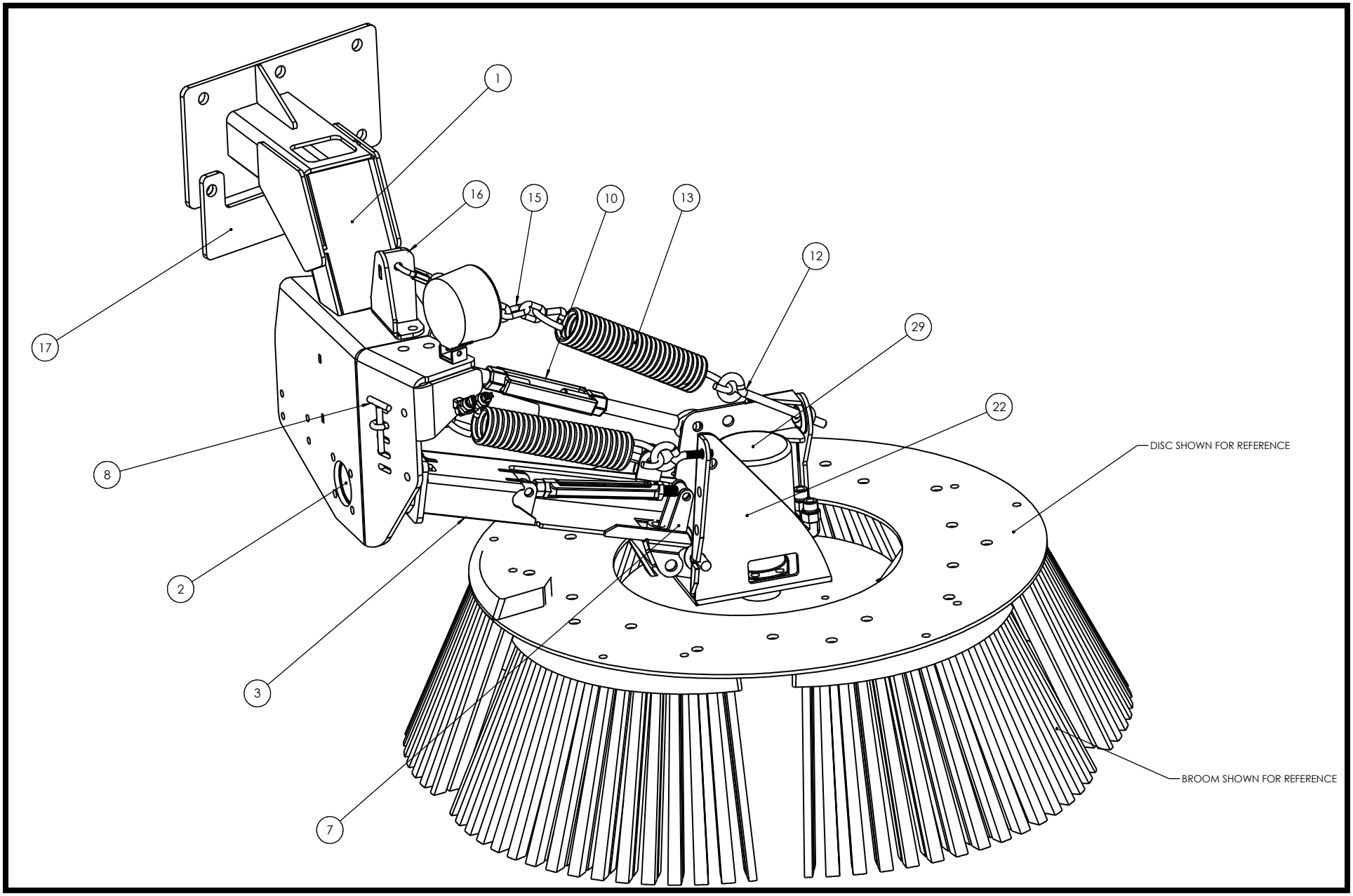

204K69 - GUTTER BROOM, RH AUTOCAR

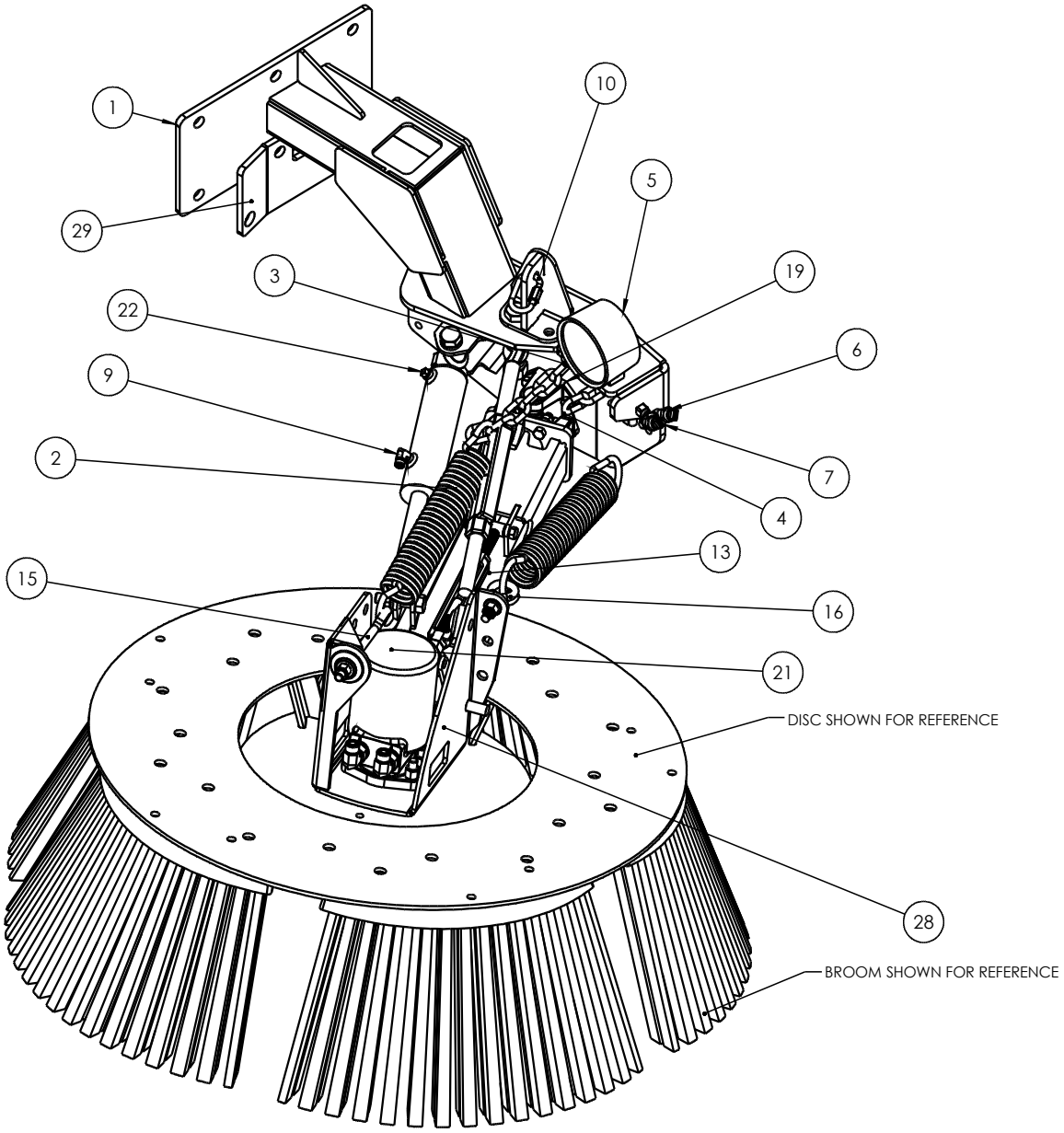

ITEM NO.	PART NUMBER	QTY.	DESCRIPTION
1	524577	1	BKT,G/B,RH,A7 AUTOCAR
2	21478	2	SPRING, 2" X 12"
3	20816-7	1	CHAIN, 5/16, 9-7/8" LONG
4	20816-4	1	CHAIN, 5/16, 5-7/8" LONG
5	61541	1	LED PAR 36 FLOOD LIGHT
6	20463	1	SPRAY TIP, DOUBLE SWIVEL
7	22542	2	SPRAY TIP YELLOW
8	27598	2	WATER FILTER 100 MEST
9	65766	1	ELBOW, 90° 1/4 MORFS X 1/4 NP
10	21924	1	ATTACH LINK
11	522209	1	TEE PIN G/B SPRING RETAINER
12	5207160	1	5/8-18 ROD END DRILLED & TAPPED
13	523441	1	ARM, WELD, RH, G/B
14	522374	1	TURNBUCKLE, 7/8
15	65597	1	EYEBOLT 1/2-13 X 6" LONG, T3
16	30284	1	SCREW, 1/2-13 X 2 EYEBOLT BENT
17	521853	1	LEVER, PIVOT, RH, TILT
18	522819	1	TILT, ADJUST, 5/8, TURNBUCKLE
19	523432	1	HIGH U-JOUNT ASSY
20	522714	1	SPRING BRACKET, RH, DOWN PRESS
21	64903	1	MOTOR, GUTTER BROOM
22	21930	1	PLUG, 1/4" NPT VENTED PIPE
23	521093	1	CYLINDER 2 X 5 BROOM INNER
24	20133	1	ELBOW,90,1/4 MNPT X FNPT
25	26930	3	1/4" MNPT X 3/8" PUSH-LOK
26	26965	1	TEE, STREET RUN 1/4 NPT
27	61047	2	ELBOW,90 1/2 MORFS X 5/8 MORB
28	525781	1	GB, MOTOR WELD, RH
29	5219622	1	BRKT, DRAG ARM, RH, AUTOCAR

ITEMS NOT SHOWN (COMPONENTS)

ITEM NO.	PART NUMBER	QTY.	DESCRIPTION
30	68228	2	ISO, FANTIP CAP/GASKET-BLACK
31	20407	1	SPRAY TIP FILTER, 100 MESH
32	20420	3	SPRAY TIP RETAINER
33	20441	1	SPRAY TIP, BRASS 8002
34	20408	1	SPRAY, TIP 1/4 MPT
35	20897	1	1/4" COUPLING, BRASS
36	20143	1	ELBOW, 45, 14 NPT STREET BRASS
37	21707	1	DEFLETOR FLAP
38	21099	1	MIRROR MOUNTING BRACKET
39	64595	1	CONNECTOR, 2 WAY RECEPTACLE
40	64610	1	WEDGELOCK, 2 WAY RECEPTACLE, D

KIT NOT SHOWN

ITEM NO.	PART NUMBER	QTY.	DESCRIPTION
41	204K92	1	GB TILT, POWER, RH ONLY

ITEMS NOT SHOWN (HOSES)

ITEM NO.	PART NUMBER	QTY.	DESCRIPTION
42	524962	1	HOSE, RR MAN A3 TO RH GB MTR
43	524963	1	HOSE, RR MAN B3 TO RH GB MTR
44	524964	1	HOSE, RR MAN V TO RH GB CYL

204K69 - GUTTER BROOM, RH AUTOCAR

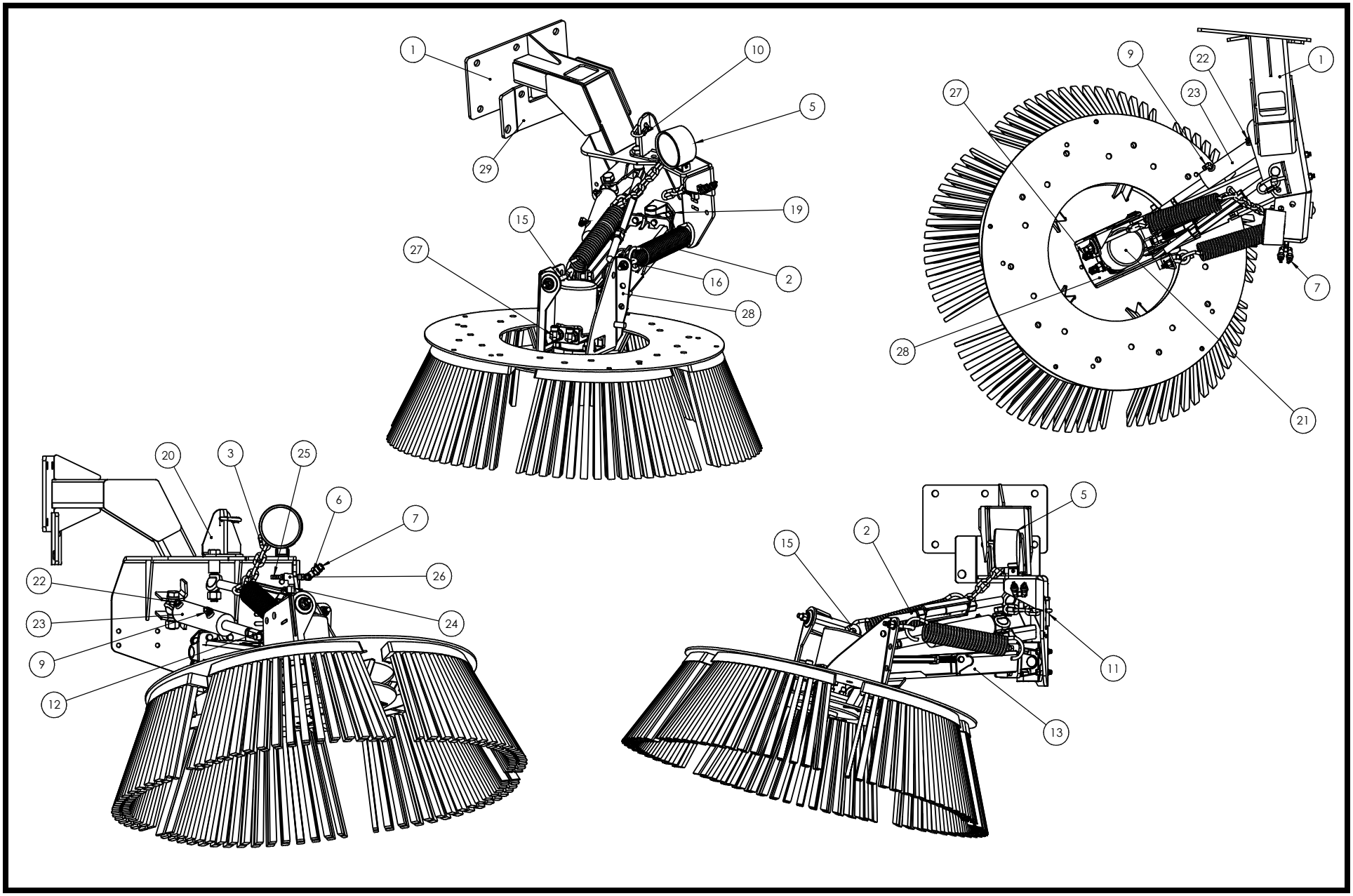

204K69 - GUTTER BROOM, RH AUTOCAR

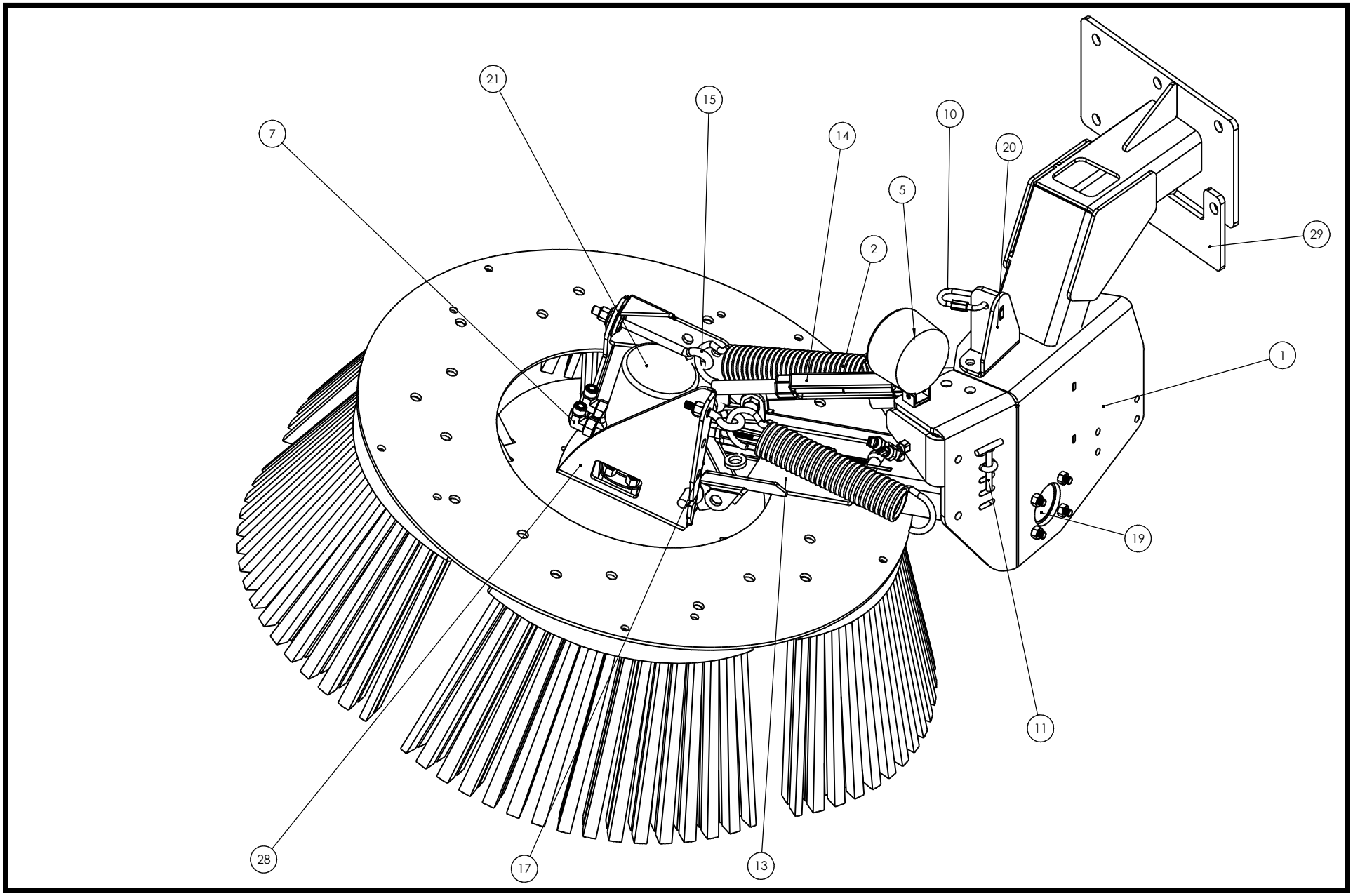

204K69 - GUTTER BROOM, RH AUTOCAR

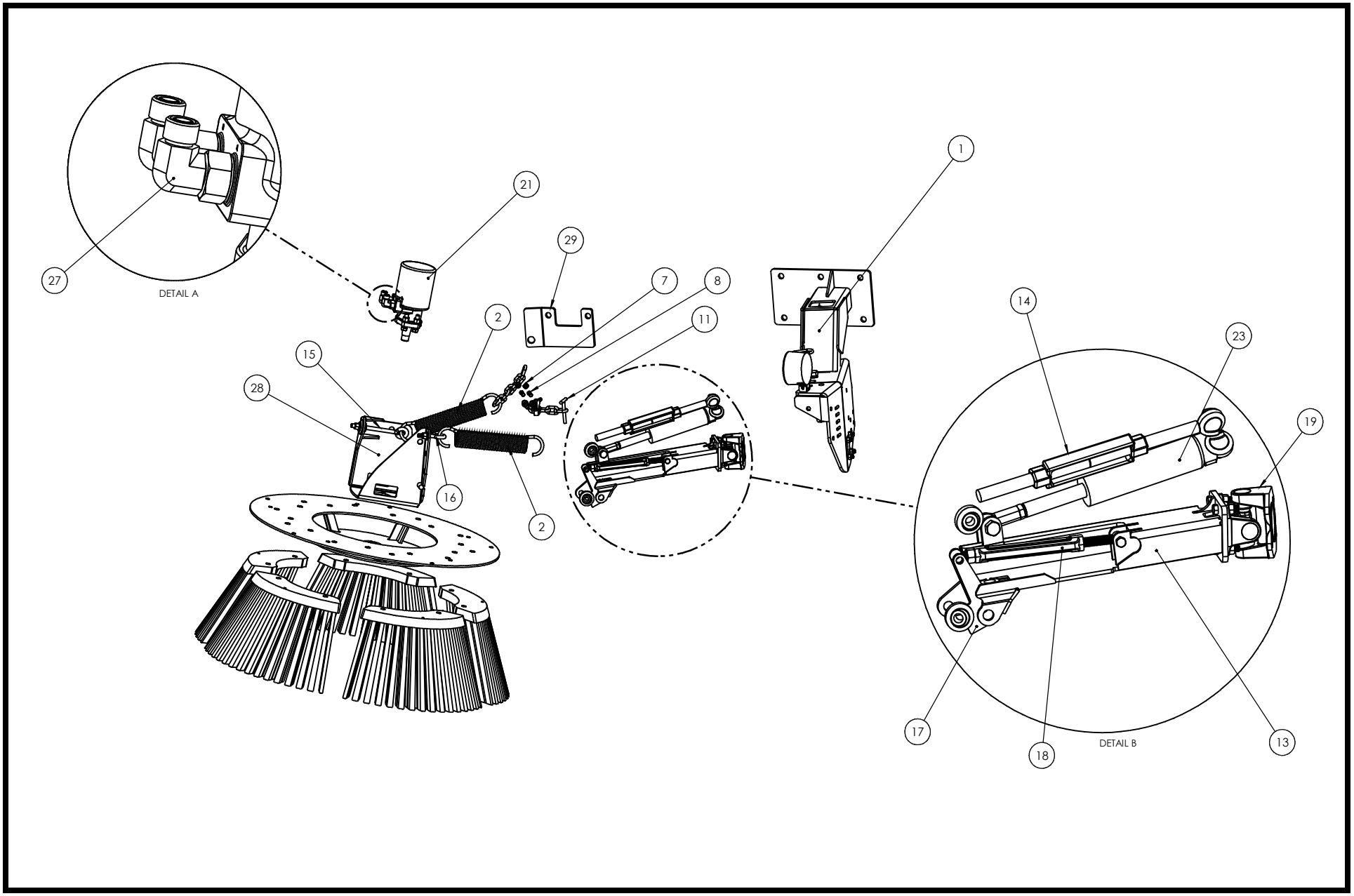

203M90 - GUTTER BROOM GEO, LH

ITEM NO.	PART NUMBER	DESCRIPTION	Broom in/QTY.
1	24139	ACTUATOR, 6", 12V, BALL SCREW	1
2	5211063	HINGE PLATE, ACTUATOR MOUNT	2
3	522146	ACTUATOR, MOUNT, GEO	1
4	523488	TUBE, WIDER GB, LH	1

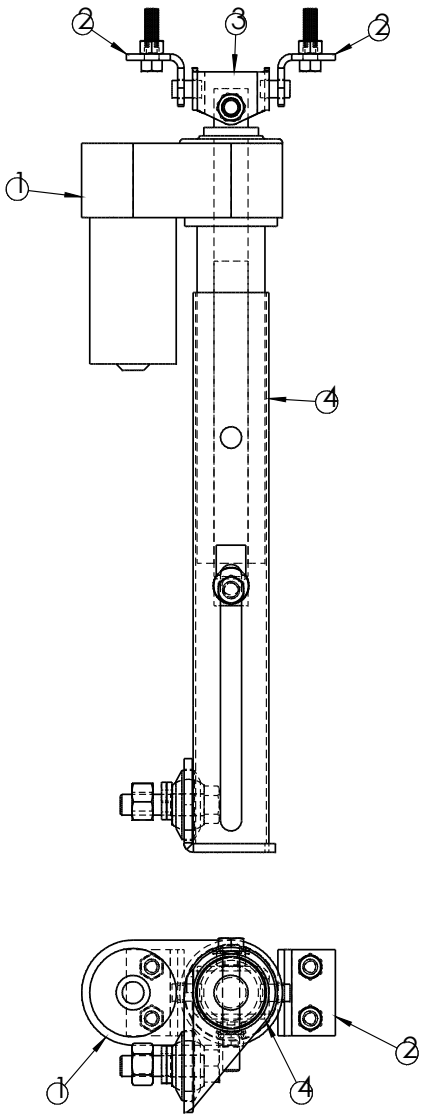

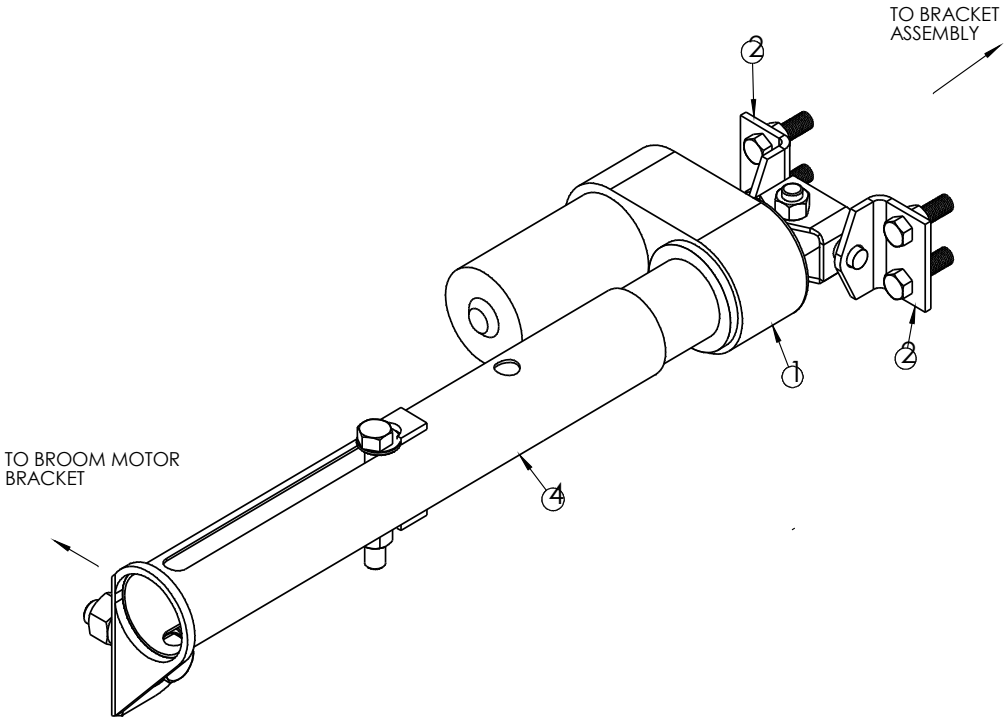

203M89 - GUTTER BROOM GEO, RH

ITEM NO.	PART NUMBER	DESCRIPTION	Broom in/QTY.
1	24139	ACTUATOR, 6", 12V, BALL SCREW	1
2	5211063	HINGE PLATE, ACTUATOR MOUNT	2
3	522146	ACTUATOR, MOUNT, GEO	1
4	523487	TUBE, WIDER GB, RH	1

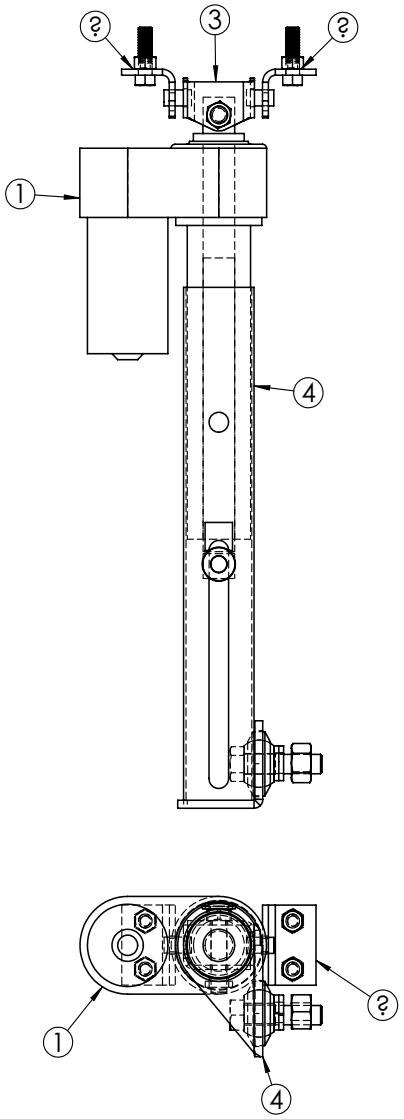

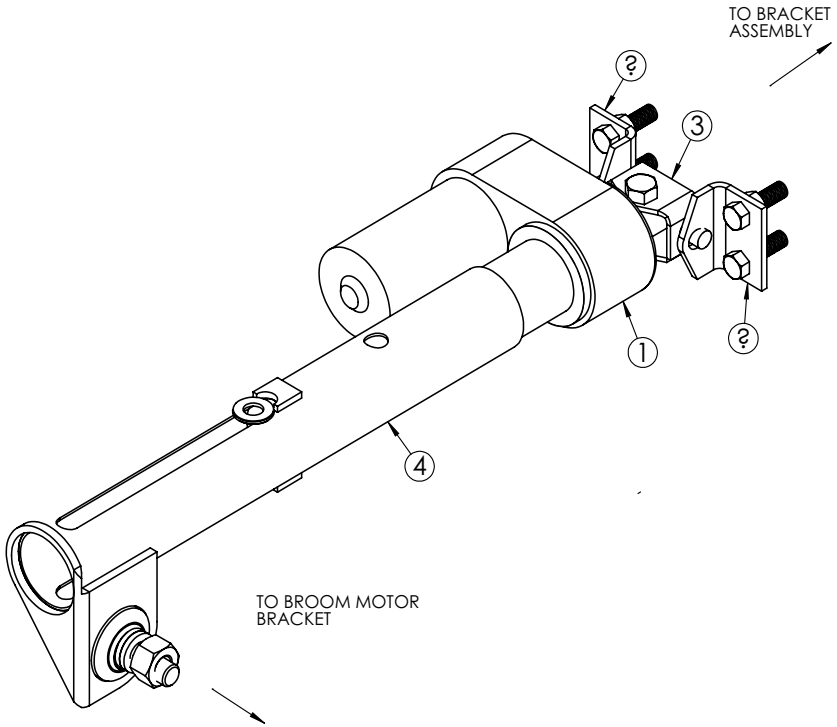

203M91 - GUTTER BROOM GEO, DUAL

ITEM NO.	PART NUMBER	QTY.	DESCRIPTION
1	5211063	4	HINGE PLATE, ACTUATOR MOUNT
2	523487	1	TUBE, WIDER GB, RH
3	523488	1	TUBE, WIDER GB, LH
4	24139	2	ACTUATOR, 6", 12V, BALL SCREW
5	522146	2	ACTUATOR, MOUNT, GEO

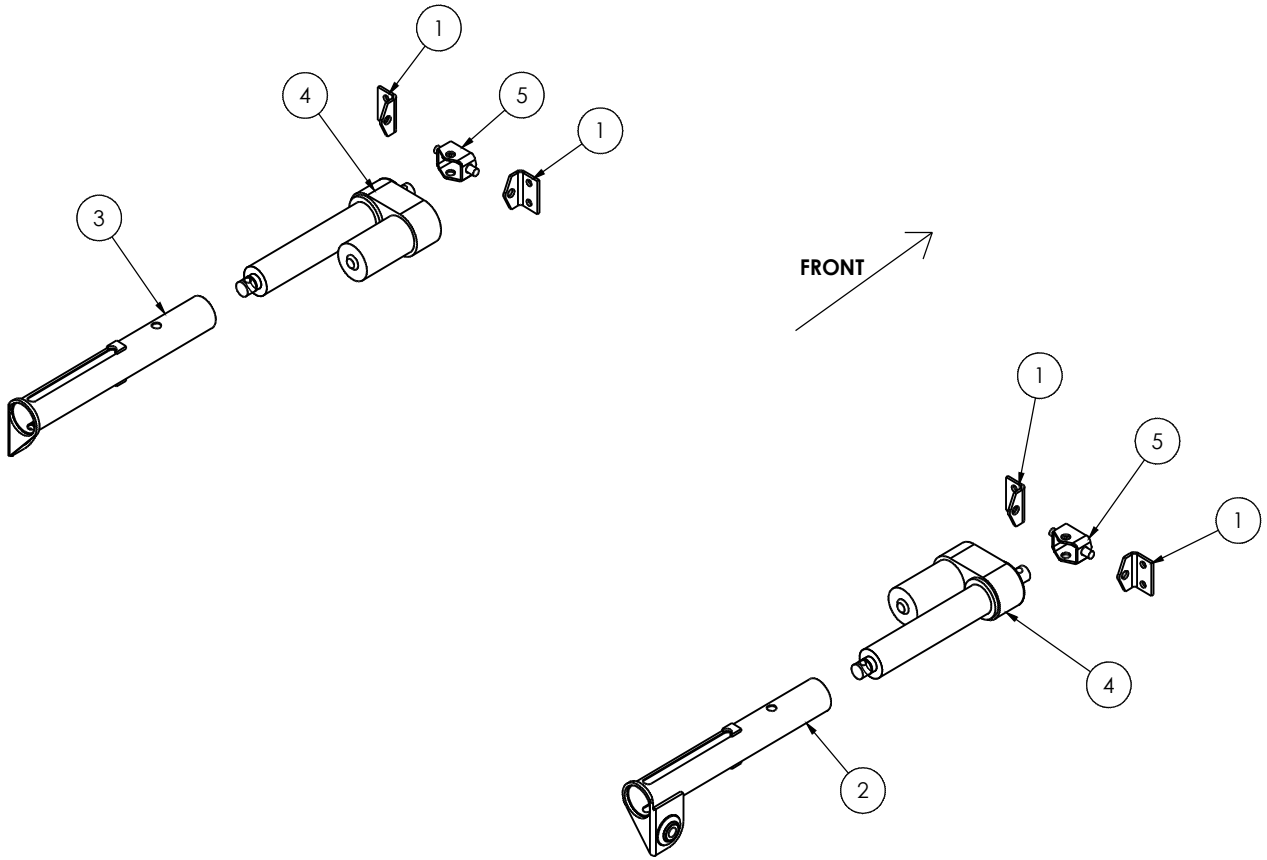

203V40 - GB AIR DOWN PRESSURE

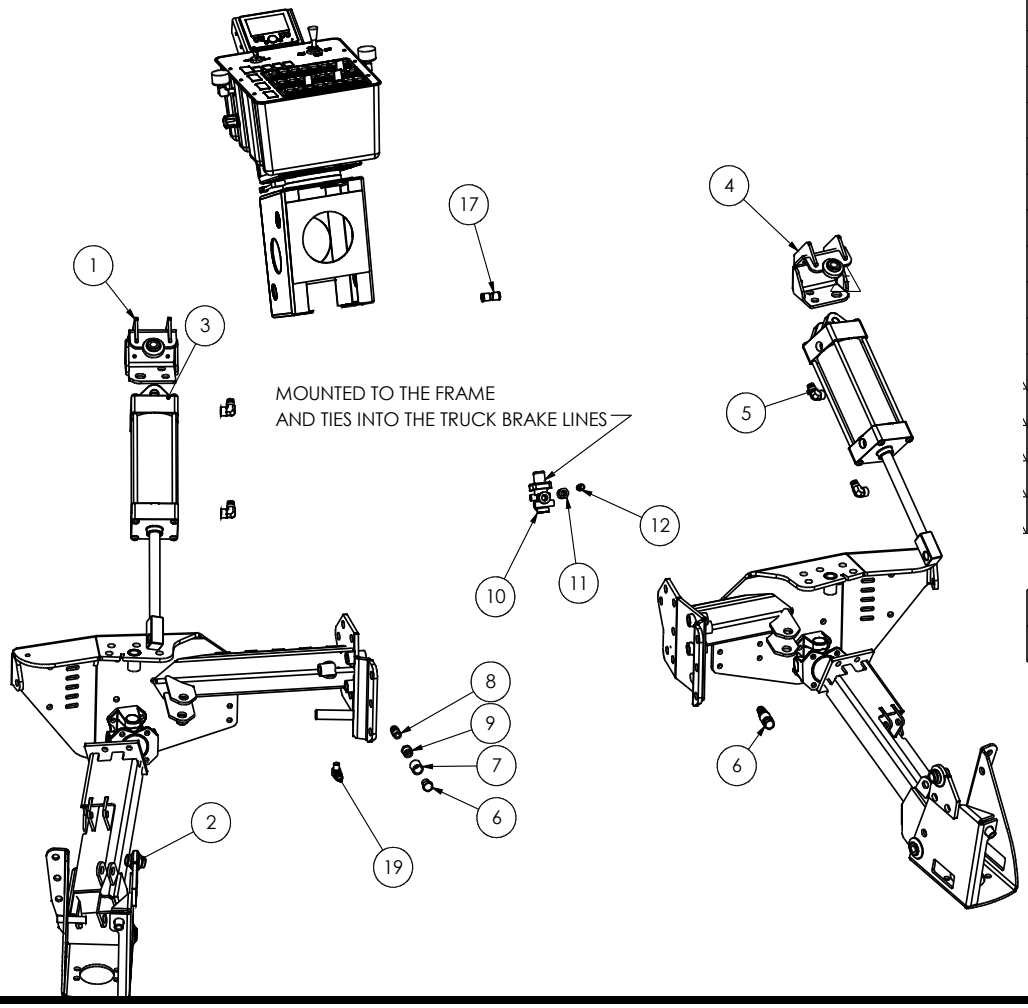

ITEM NO.	PART NUMBER	DESCRIPTION	QTY.
1	525572	WELD, RH GB DWN PRS CYL MNT	1
2	523974	GB AIR CYL MOUNT LOWER	2
3	28579	CYLINDER,PNEUMATIC 4 X 8	2
4	525573	WELD, LH GB DWN PRS CYL MNT	1
5	28978	ELBOW,90,1/2 NPT X 3/8 P2C	4
6	28592	BREATHER, AIR VENT 1/2 NPT	2
7	55013	1/2 FPT COUPLING	2
8	28983	ADAPTER,3/8 NPT X 3/8 P2C	2
9	21344	BUSHING,1/2 MNPT X 3/8 FNPT BRASS	2
10	28788	AIR VALVE, PRIORITY	1
11	21342	REDUCER, 1/2 MNPT X 1/4 FNPT,BRASS	1
12	22473	NIPPLE,1/4 NPT HEX BRASS	1
13	20515	GAUGE,AIR PRESSURE 0-160 PSI	2
14	54694	ELBOW,90,1/8 NPT X 3/8 P2C	2
15	28974	TEE,UNION,3/8 P2C	1
16	23851	1/8" 90° BRASS ELBOW NPT FEMALE	4
17	67655	UNION, ST, 3/8-3/8, P2C	1
18	68187	REGULATOR, 1/4 MODULAR DUAL	2
19	28976	ELBOW,90,1/4 NPT X 3/8 P2C	3
20	67654	NIPPLE, PIPE, 1/8 NPT X 2.50	4
21	21265	PLUG,1/4 NPT BRASS SQUARE HEAD	2

NOTE: ITEMS BELOW ARE NOT SHOWN

ITEM NO.	PART NUMBER	DESCRIPTION	QTY.
22	20529-60	TUBING,3/8 NYLON AIR, 60FT	1

203V40 - GB AIR DOWN PRESSURE

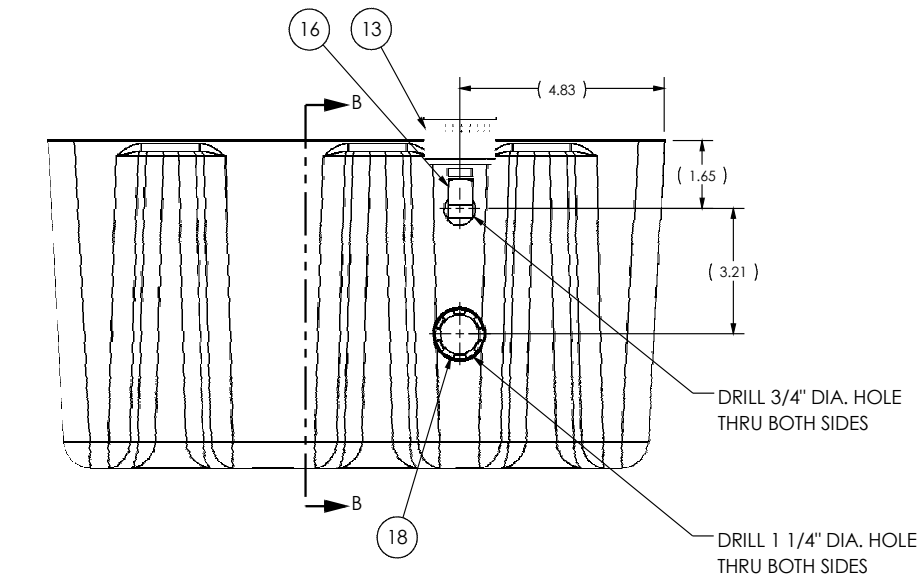

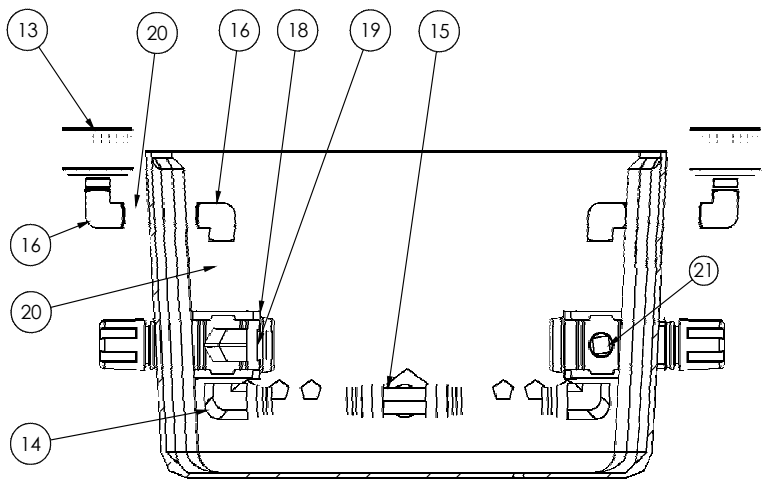

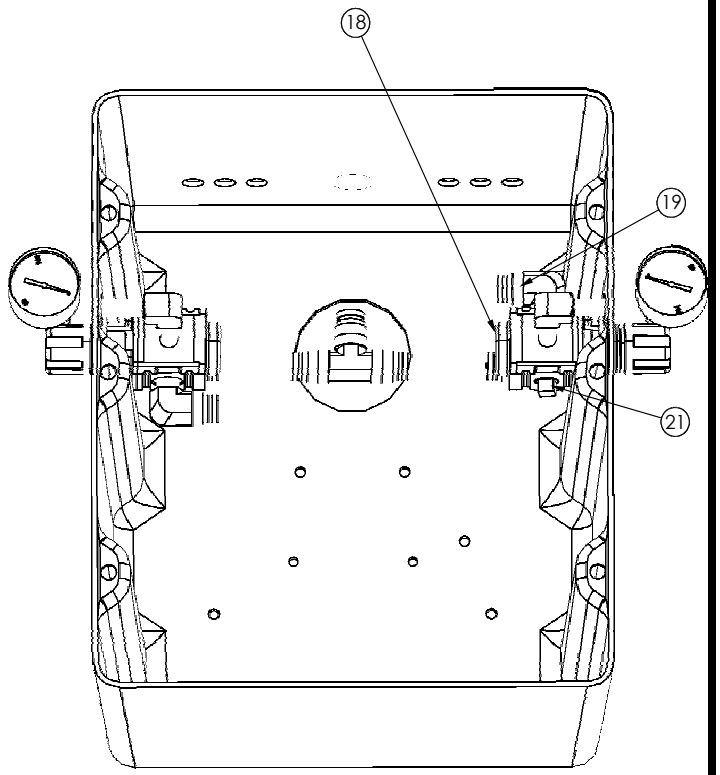

Body

5

203674 - SIGHT GAUG, WATER TANK, SIDE

ITEM NO.	PART NUMBER	Default/QTY.	DESCRIPTION
1	23221	2	ELBOW, 90 1/2" SCH 80 PVC
2	22971	2	GROMMET, 1/2" UNISEAL PIPE
3	23195-12.5	1	TUBE,VERT,SIGHT GAUGE
4	23195-3	2	TUBE,HORIZ,SIGHT GAUGE

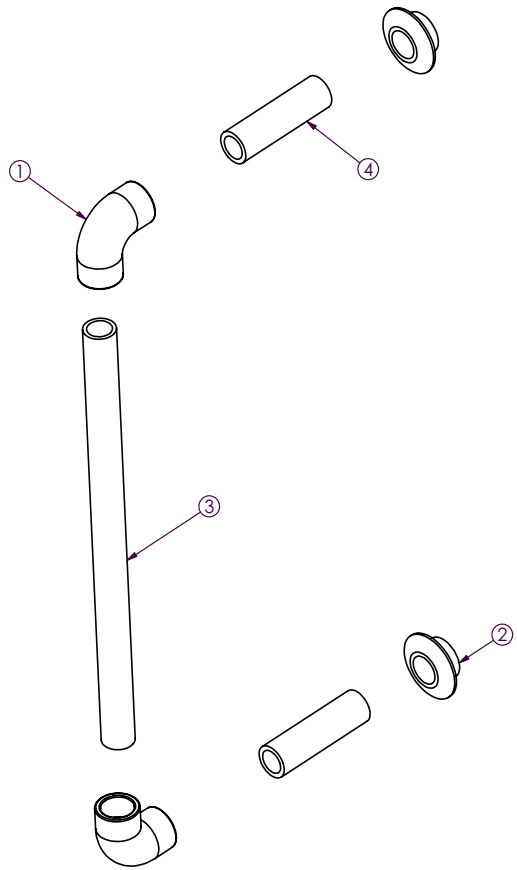

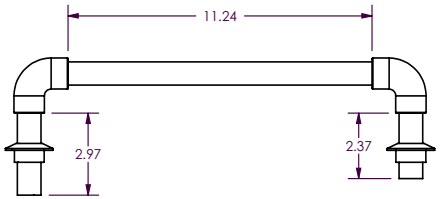

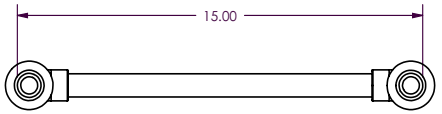

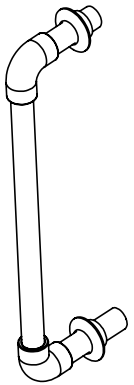

PROPRIETARY AND CONFIDENTIAL

204Q61 - HP WTR W/AIR TK

ITEM NO.	PART NUMBER	QTY.	DESCRIPTION
1	68185	1	2000 PSI, PUMP-MOTOR
2	65924	1	ELBOW, 90° 1/2 NPT TO 3/4 HB
3	65635	1	ELBOW, 90° 1/2 MORFS X 1/2 NPT
4	64078	1	ADAPTER, 1/2 MORFS X 1/2 MNPT
5	61050	1	ELBOW 90 1/2 MORFS X 1/2 FORFS
6	23005	1	SWITCH, SPST WATERPROOF
7	65675	1	SWITCH, BOOT, RED
8	65747	1	PANEL, PRESSURE WASHER
9	61014	2	1/2" MORFS X 1/2" MORB
10	24687	2	HOSE CLAMP 2"
11	204Q37	1	INSTALL, DEF TANK A7, A8,A9
12	66293	1	CONNECTOR, 1 NPT X 3/4 HOSE B
13	524790	1	FRAME,WATER RES, 350G, M2
14	5219645	1	MISC TRAY, 350 WATER RES FRAME
15	22040	1	DO3 VALVE, 4WE6G6X/EG12N9K4

ITEMS BELOW NOT SHOWN

ITEM NO.	PART NUMBER	QTY.	DESCRIPTION
16	525571	2	HOSE, MANIFOLD TO HP PUMP
17	24308	1	DIN CONNECTOR
18	21639	20 ft	WIRE, 18 GA-BLUE
19	20281	20 ft	HOSE, FLEXGUARD 250
20	54678	11 ft	HOSE, 3/4" FLEX
21	20155	1	CLAMP, 1 1/2 COATED

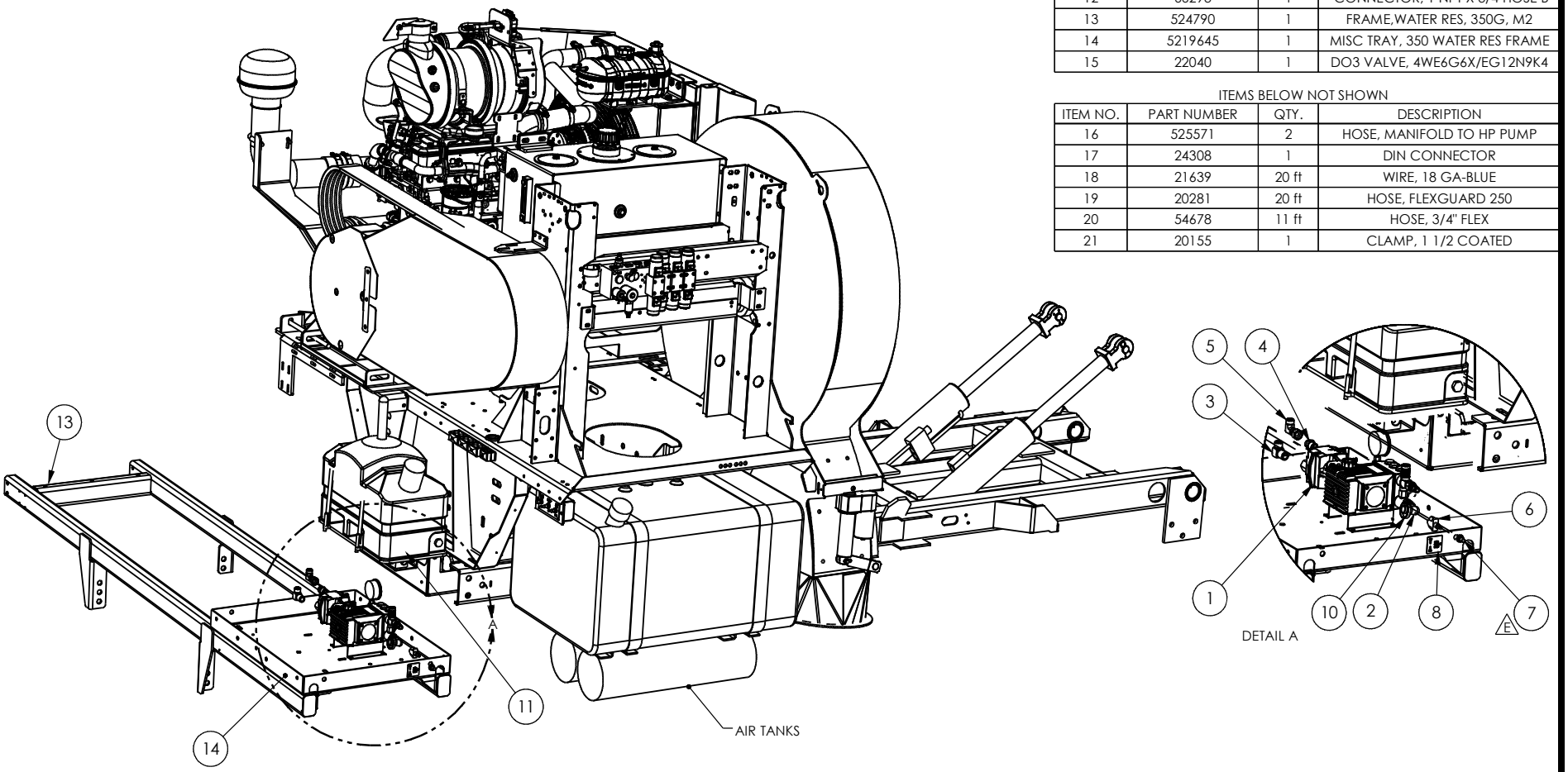

204Q61 - HP WTR W/AIR TK

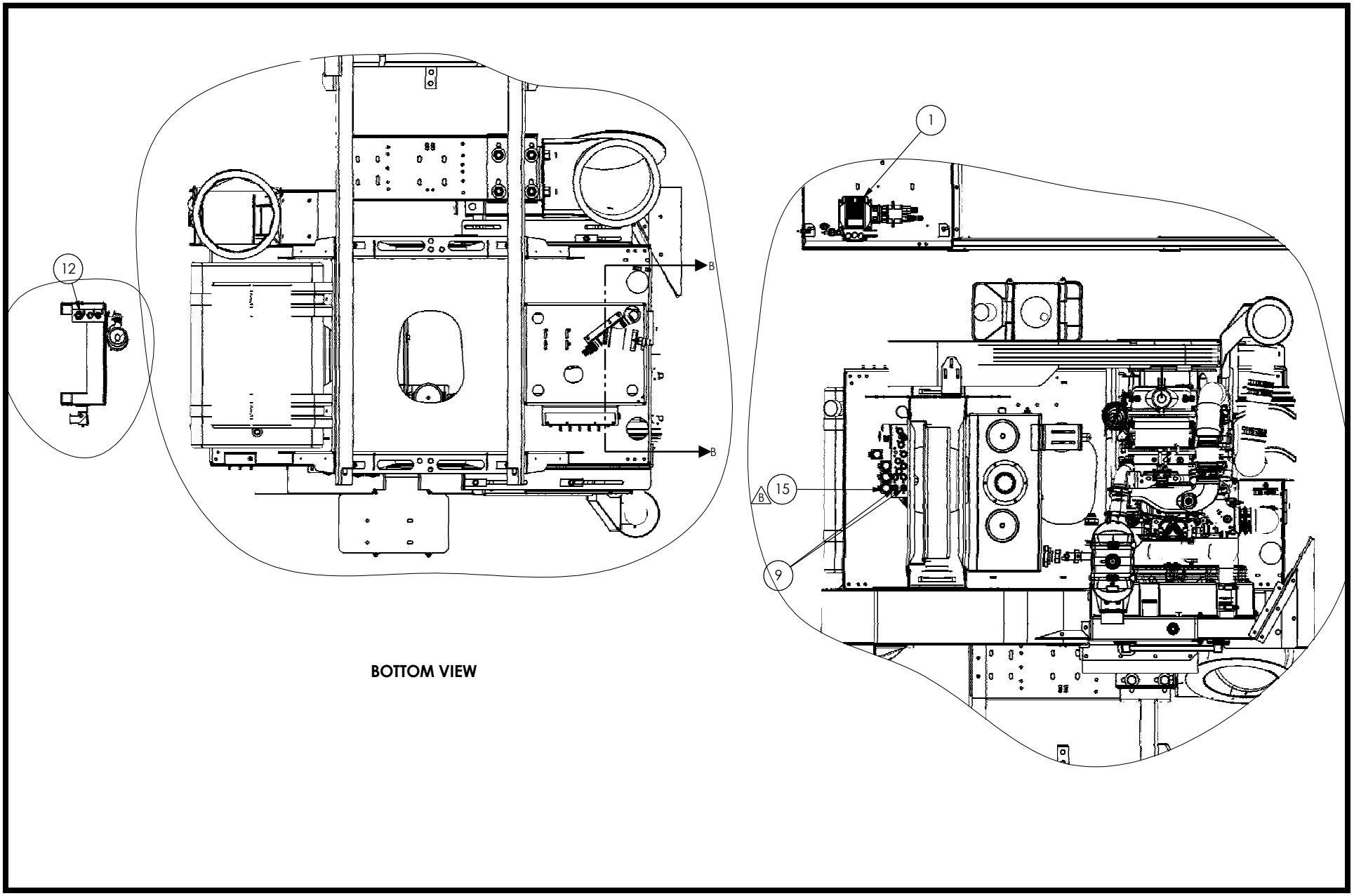

BOTTOM VIEW

68185 - KIT, HIGH PRESSURE WASHDOWN

ITEM NO.	PART NUMBER	QTY.	DESCRIPTION
1	68185-PM	1	1500 PSI, PUMP-MOTOR
2	68185-Y	1	HOSE ASSY, A500 PSI P-M
3	68185-W	1	WAND, 1500PSI PUMP-MOTOR

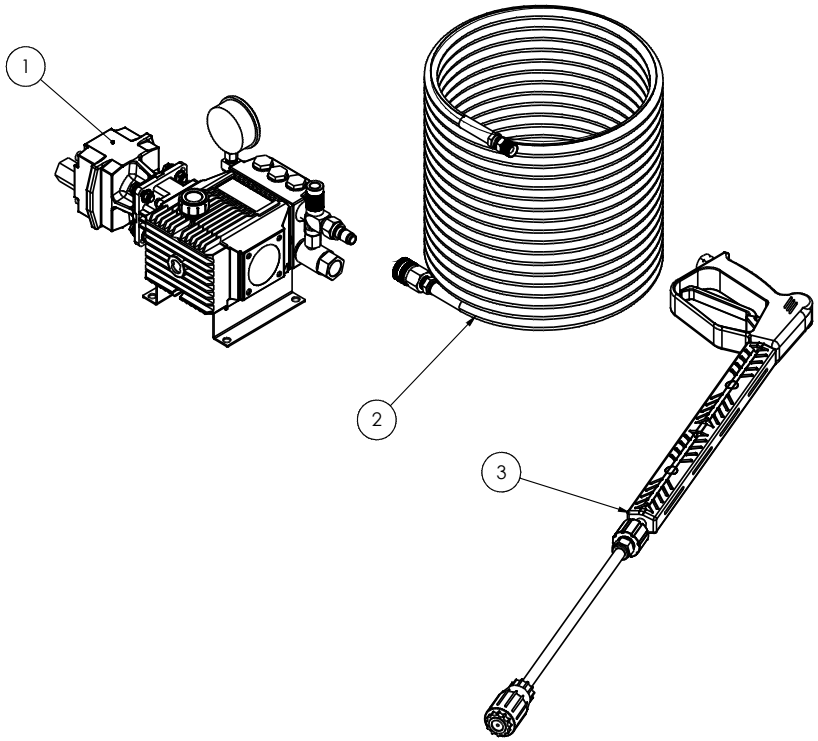

204Q37 - DEF TANK MOUNT

ITEM NO.	PART NUMBER	DESCRIPTION	QTY.
1	5224663	BRACKET, AUX ENG DEF TANK	1
2	525486	WLD, STRP,DEF TANK,FLAT MNT	2

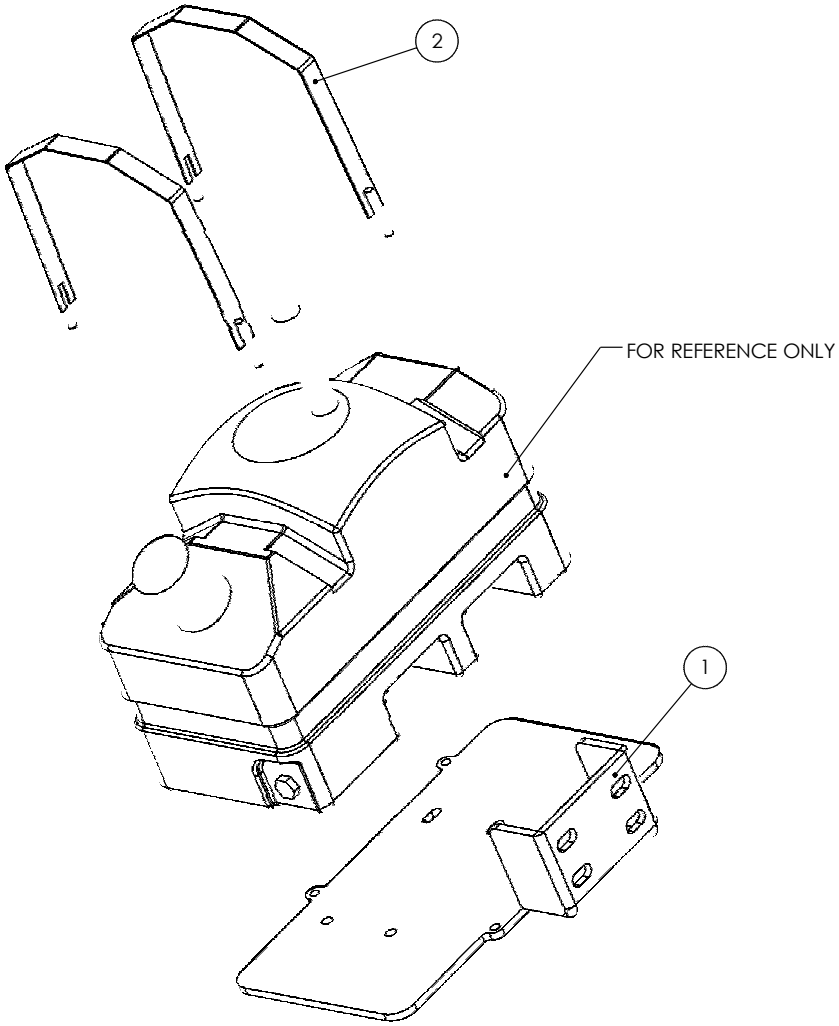

204X34 - 350 GALLON WATER TANK SIGHT GAUGE

ITEM NO.	PART NUMBER	QTY.	DESCRIPTION
1	22971	2	GROMMET, 1/2" UNISEAL PIPE
2	526049	1	ASSY,SIGHT GA, 350-G, 42

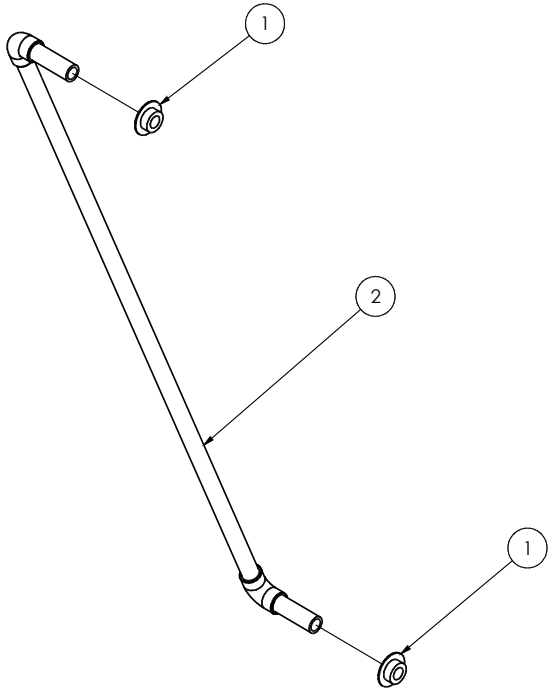

526049 - SIGHT GA, 42

ITEM NO.	PART NUMBER	QTY.	DESCRIPTION
1	23221	2	ELBOW, 90 1/2" SCH 80 PVC
2	5224673	1	42" TRANSPARENT TUBE
3	5224674	2	3" TRANSPARENT TUBE

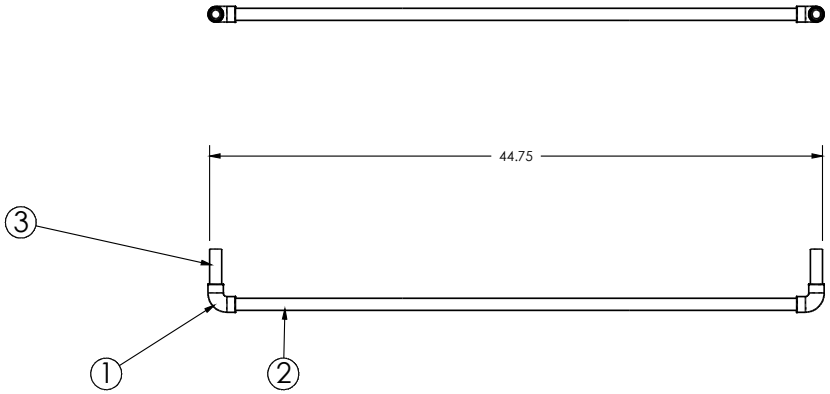

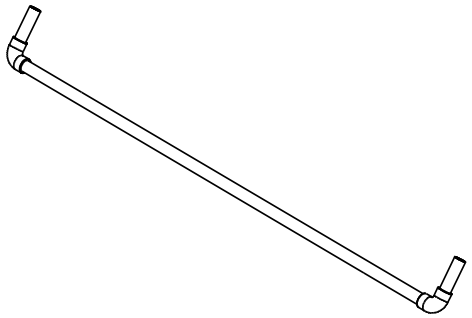

203680 - FRONT SPRAY BAR

ITEM NO.	PART NUMBER	QTY.	DESCRIPTION
1	521132	1	SPRAY BAR TUBE ASSY 72"
2	20465	2	SPRAY BODY
3	20149	4	CLAMP, .75" RUBBER LINED
4	22542	7	SPRAY TIP YELLOW
5	23949	2	SPRAY TIP RETAINING NUT, PVC
6	27598	7	WATER FILTER 100 MEST
7	68228	5	ISO, FANTIP CAP/GASKET-BLACK
8	68227	5	NOZZLE BODY 12 HINGED NOCDV

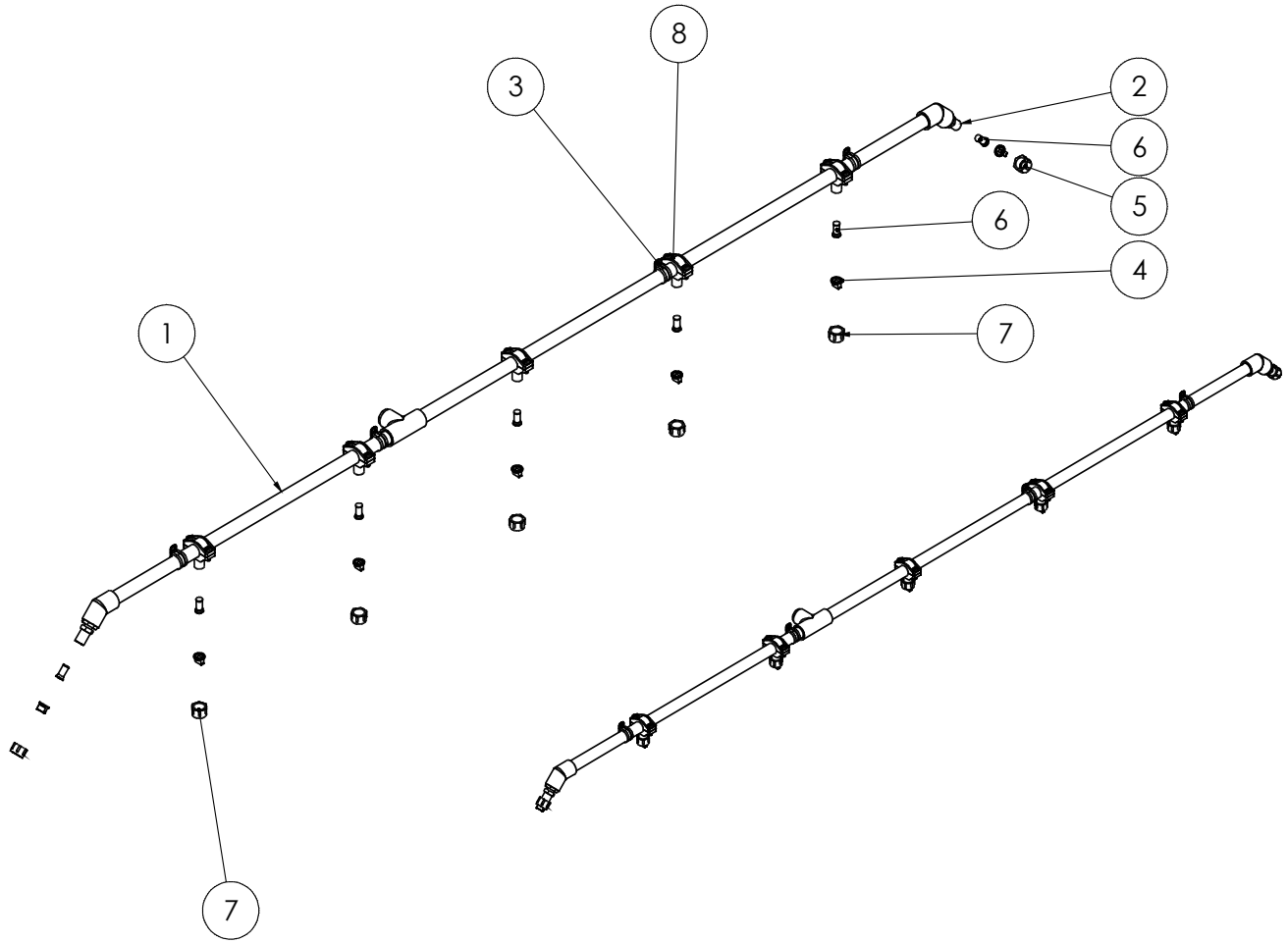

204Q53 - HP WTR W/TB

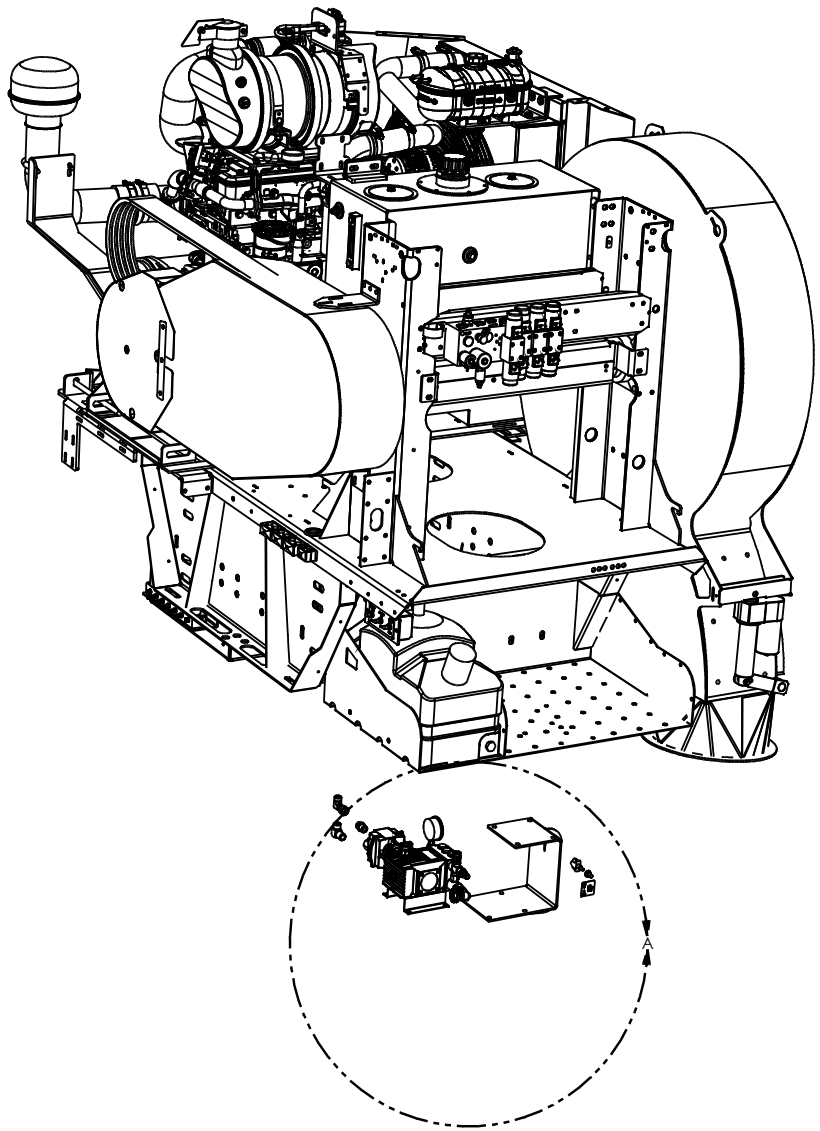

ITEM NO.	PART NUMBER	QTY.	DESCRIPTION
1	523043	1	HANGER,PUMP,HI-PR,WATR
2	68185	1	2000 PSI, PUMP-MOTOR
3	65924	1	ELBOW, 90° 1/2 NPT TO 3/4 HB
4	65635	1	ELBOW, 90° 1/2 MORFS X 1/2 NPT
5	64078	1	ADAPTER, 1/2 MORFS X 1/2 MNPT
6	61050	1	ELBOW 90 1/2 MORFS X 1/2 FORFS
7	23005	1	SWITCH, SPST WATERPROOF
8	65675	1	SWITCH, BOOT, RED
9	65747	1	PANEL, PRESSURE WASHER
10	61014	2	1/2" MORFS X 1/2" MORB
11	24687	2	HOSE CLAMP 2"
12	66293	1	CONNECTOR, 1 NPT X 3/4 HOSE B
13	22040	1	DO3 VALVE, 4WE6G6X/EG12N9K4

ITEMS BELOW NOT SHOWN

ITEM NO.	PART NUMBER	QTY.	DESCRIPTION
14	525571	2	HOSE, MANIFOLD TO HP PUMP
15	24308	1	DIN CONNECTOR
16	21639	20 ft	WIRE, 18 GA-BLUE
17	20281	20 ft	HOSE, FLEXGUARD 250
18	54678	11 ft	HOSE, 3/4" FLEX
19	20155	1	CLAMP, 1 1/2 COATED

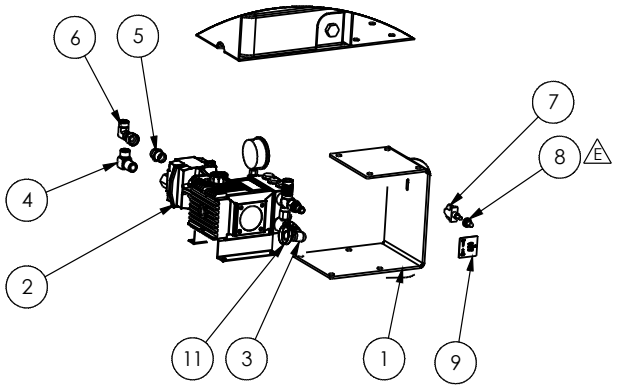

204Q53 - HP WTR W/TB

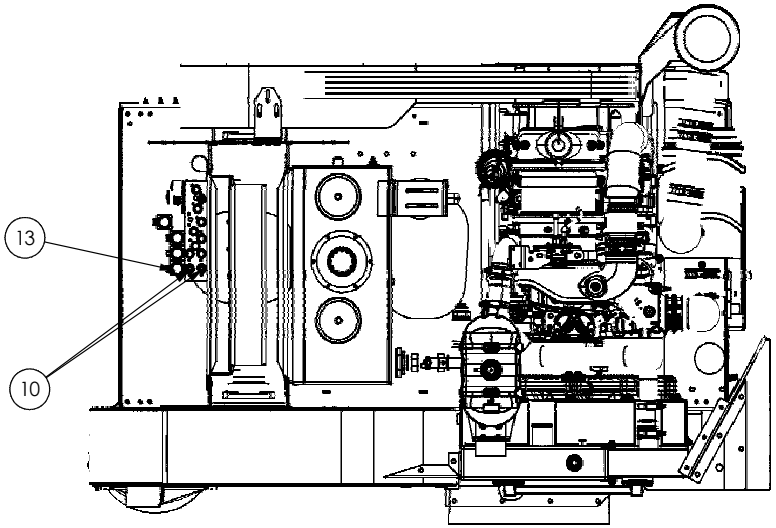

TOP VIEW

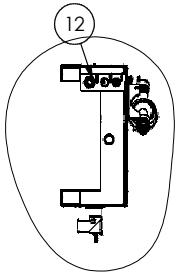

SECTION B-B
SCALE 1 : 15

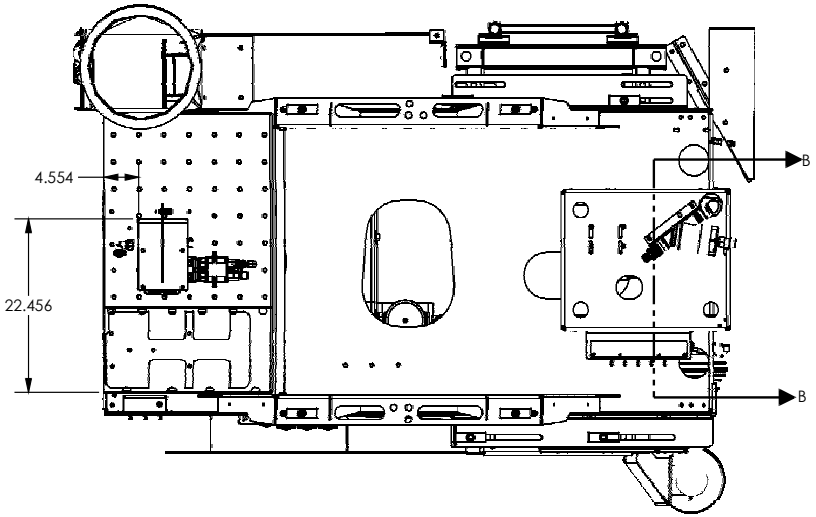

204Q54 - HP WATER W/TANK

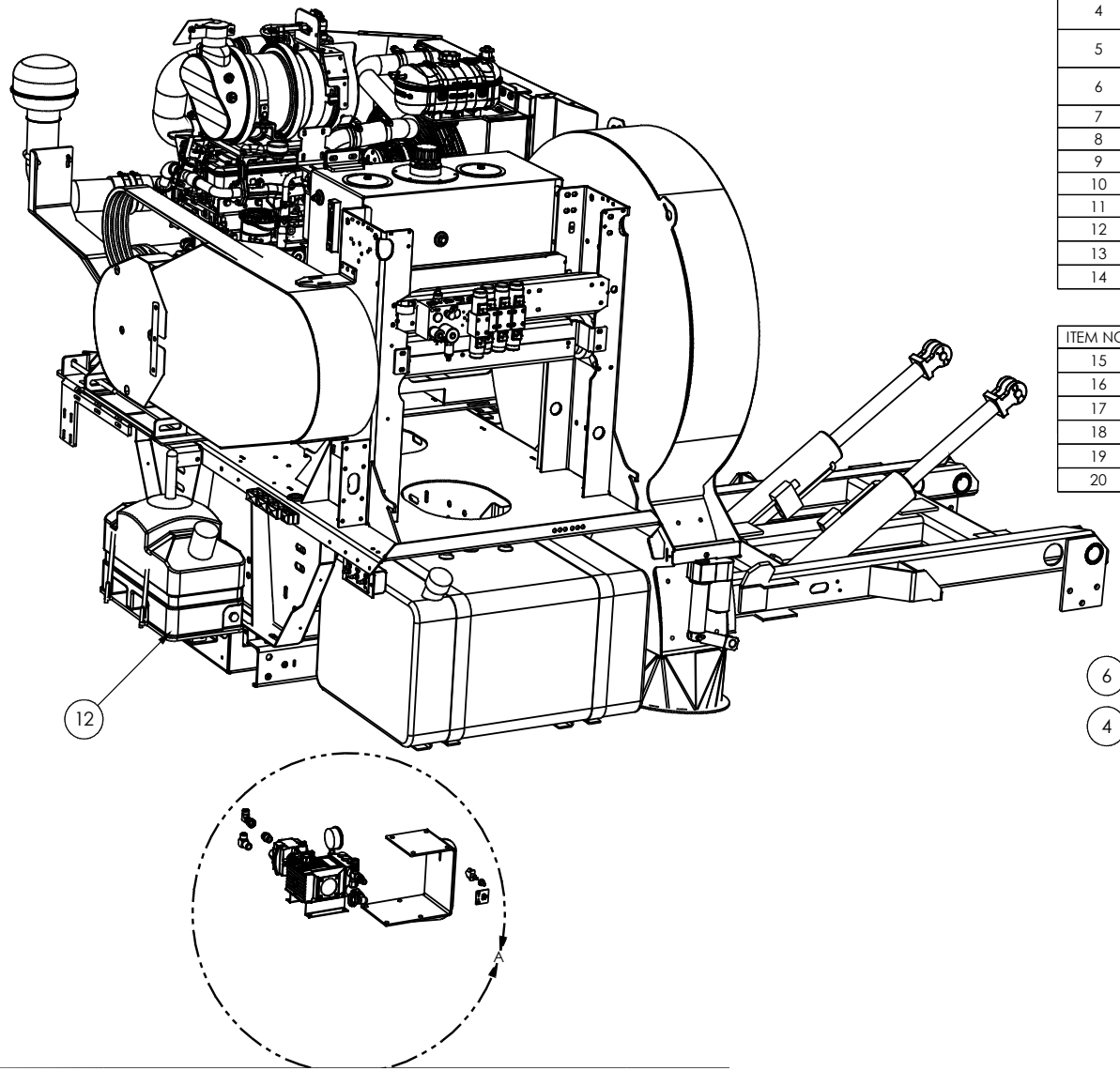

ITEM NO.	PART NUMBER	QTY.	DESCRIPTION
1	523043	1	HANGER,PUMP,HI-PR,WATR
2	68185	1	2000 PSI, PUMP-MOTOR
3	65924	1	ELBOW, 90° 1/2 NPT TO 3/4 HB
4	65635	1	ELBOW, 90° 1/2 MORFS X 1/2 NPT
5	64078	1	ADAPTER, 1/2 MORFS X 1/2 MNPT
6	61050	1	ELBOW 90 1/2 MORFS X 1/2 FORFS
7	23005	1	SWITCH, SPST WATERPROOF
8	65675	1	SWITCH, BOOT, RED
9	65747	1	PANEL, PRESSURE WASHER
10	61014	2	1/2" MORFS X 1/2" MORB
11	24687	2	HOSE CLAMP 2"
12	204Q37	1	INSTALL, DEF TANK A7, A8,A9
13	66293	1	CONNECTOR, 1 NPT X 3/4 HOSE B
14	22040	1	DO3 VALVE, 4WE6G6X/EG12N9K4

ITEMS BELOW NOT SHOWN

ITEM NO.	PART NUMBER	QTY.	DESCRIPTION
15	525571	2	HOSE, MANIFOLD TO HP PUMP
16	24308	1	DIN CONNECTOR
17	21639	20 ft	WIRE, 18 GA-BLUE
18	20281	20 ft	HOSE, FLEXGUARD 250
19	54678	132 in	HOSE, 3/4" FLEX
20	20155	1	CLAMP, 1 1/2 COATED

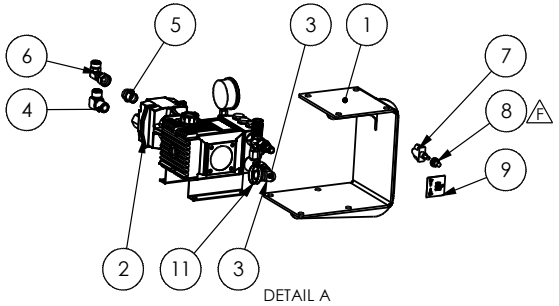

204Q54 - HP WATER W/TANK

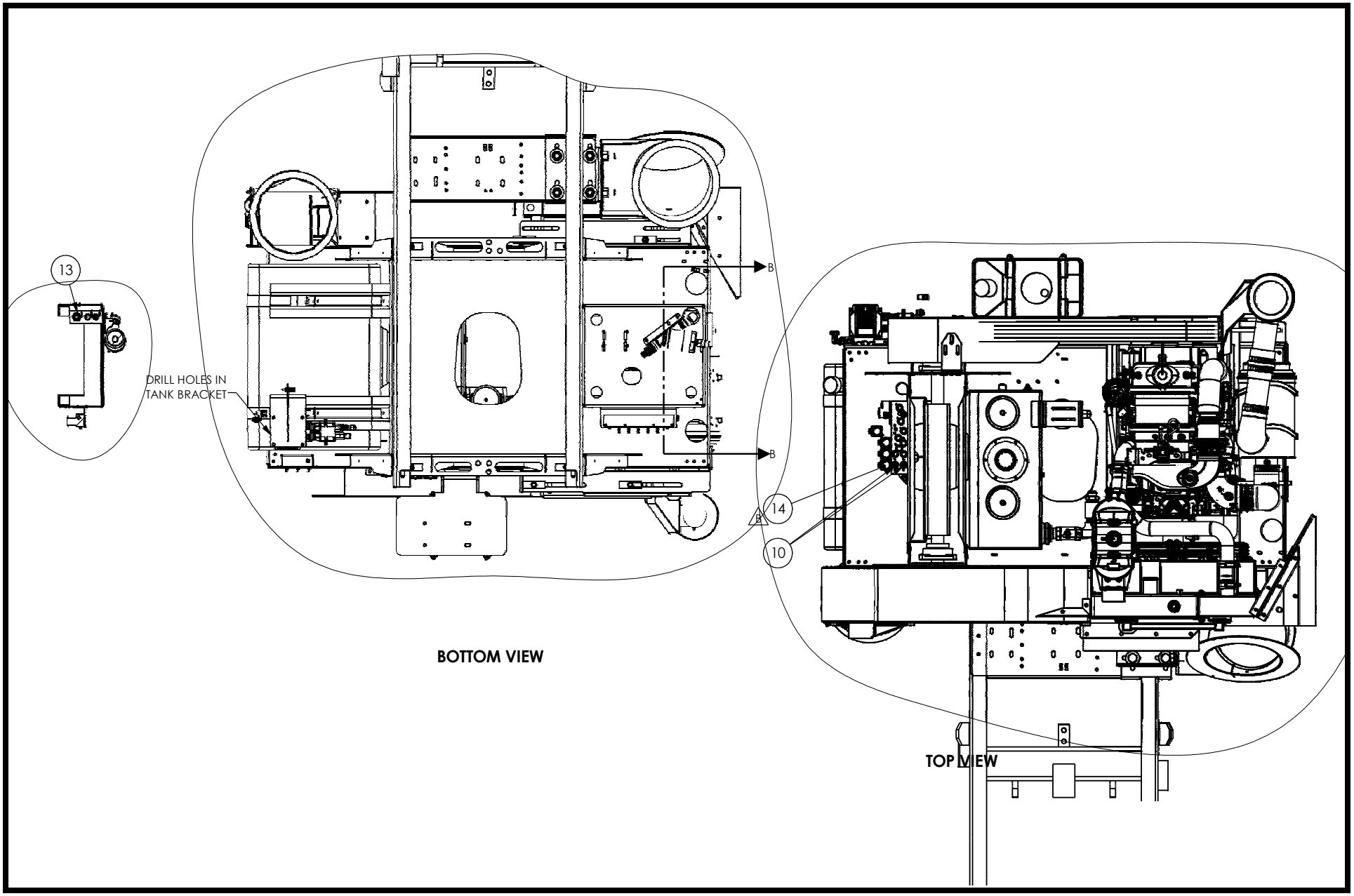

204U48 - HP WATER SW, REAR TANK

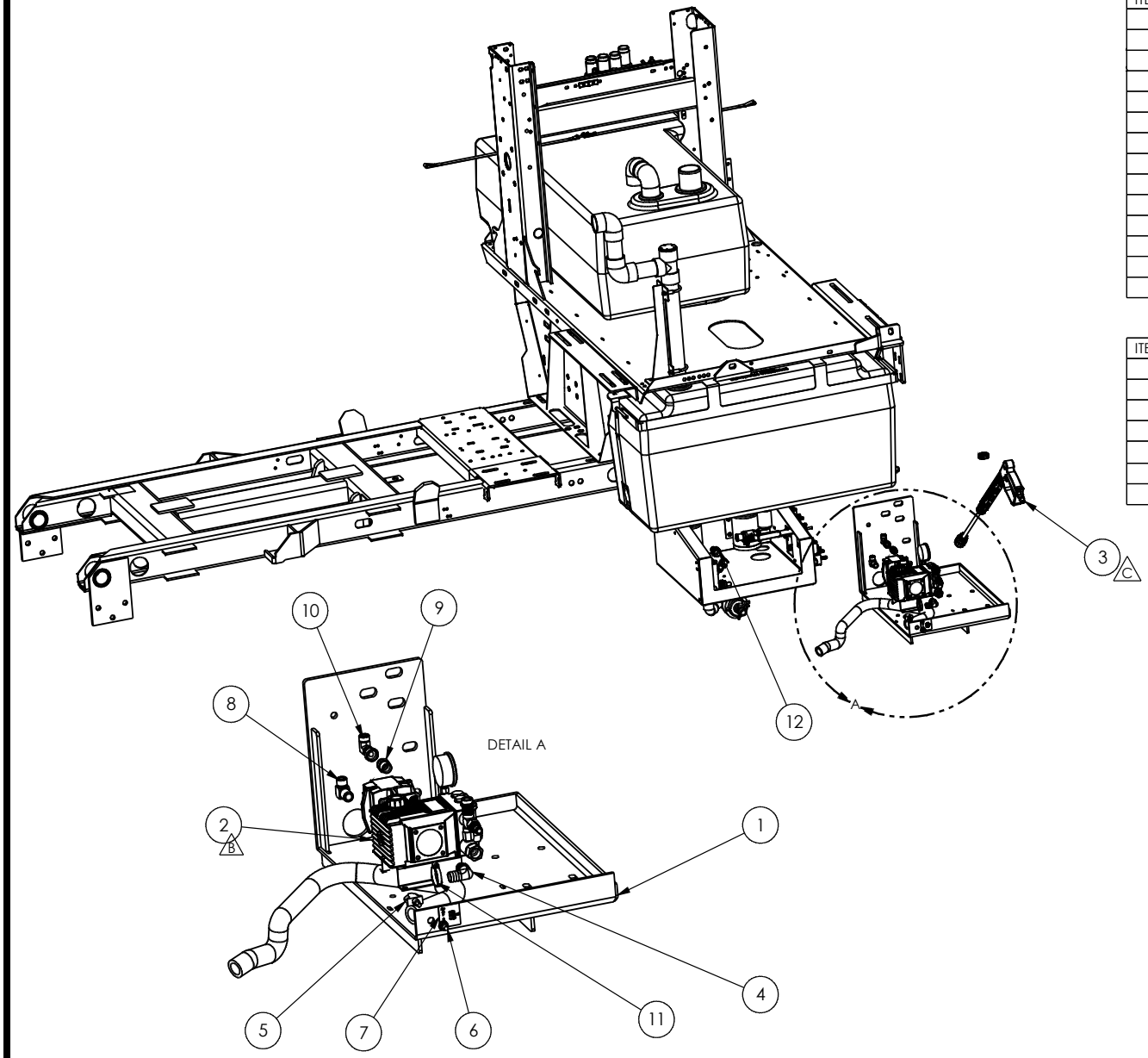

ITEM NO.	PART NUMBER	QTY.	DESCRIPTION
1	525502	1	MOUNT, HP WTR, SW
2	68185	1	2000 PSI, PUMP-MOTOR
3	20165	1	3/8 NIPPLE NPT PIPE (STEEL)
4	65924	1	ELBOW, 90° 1/2 NPT TO 3/4 HB
5	23005	1	SWITCH, SPST WATERPROOF
6	65675	1	SWITCH, BOOT, RED
7	65747	1	PANEL, PRESSURE WASHER
8	65635	1	ELBOW, 90° 1/2 MORFS X 1/2 NPT
9	64078	1	ADAPTER, 1/2 MORFS X 1/2 MNPT
10	61050	1	ELBOW 90 1/2 MORFS X 1/2 FORFS
11	24687	2	HOSE CLAMP 2"
12	66293	1	CONNECTOR, 1 NPT X 3/4 HOSE B
13	61014	2	1/2" MORFS X 1/2" MORB
14	22040	1	DO3 VALVE

ITEMS BELOW NOT SHOWN

ITEM NO.	PART NUMBER	QTY.	DESCRIPTION
15	525570	2	HOSE, MANIFOLD TO HP PUMP
16	24308	1	DIN CONNECTOR
17	21639	20 ft	WIRE, 18 GA-BLUE
18	20281	20 ft	HOSE, FLEXGUARD 250
19	54678	132 in	HOSE, 3/4" FLEX
20	20155	1	CLAMP, 1 1/2 COATED
21	53042	1	HIGH PRESSURE HOSE ASSY

204U48 - HP WATER SW, REAR TANK

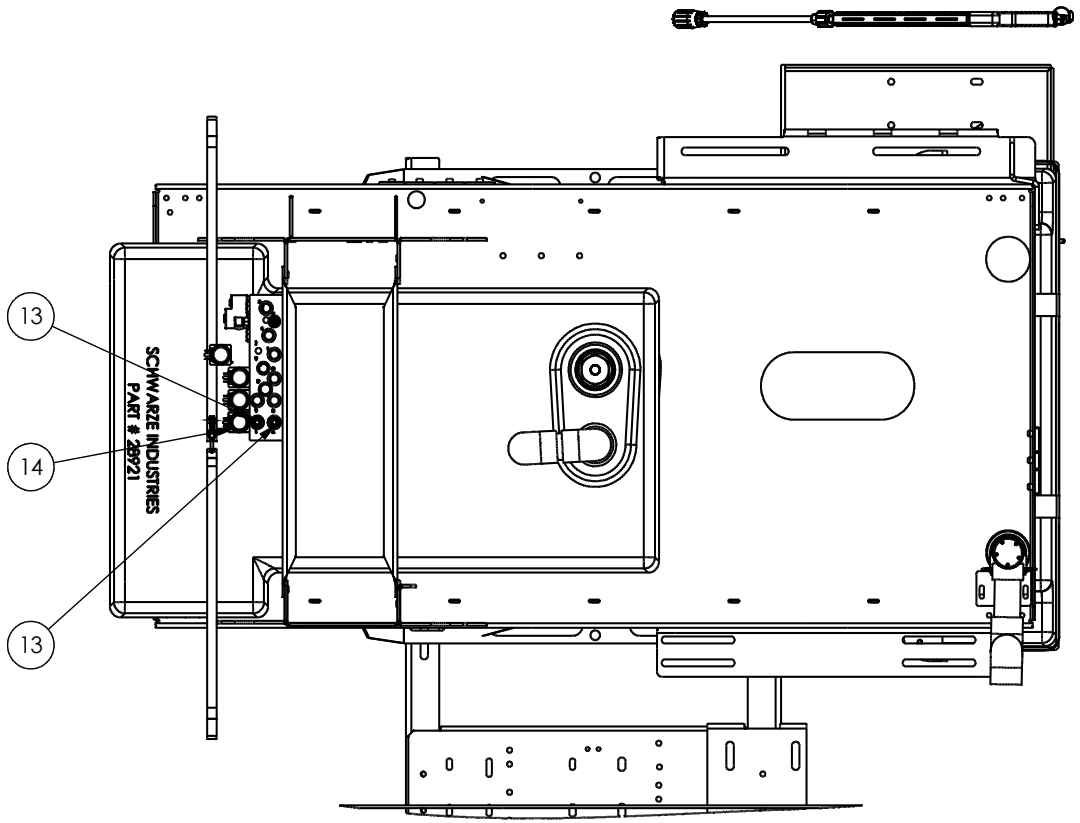

TOP VIEW

204Q55 - HP WTR W/TT

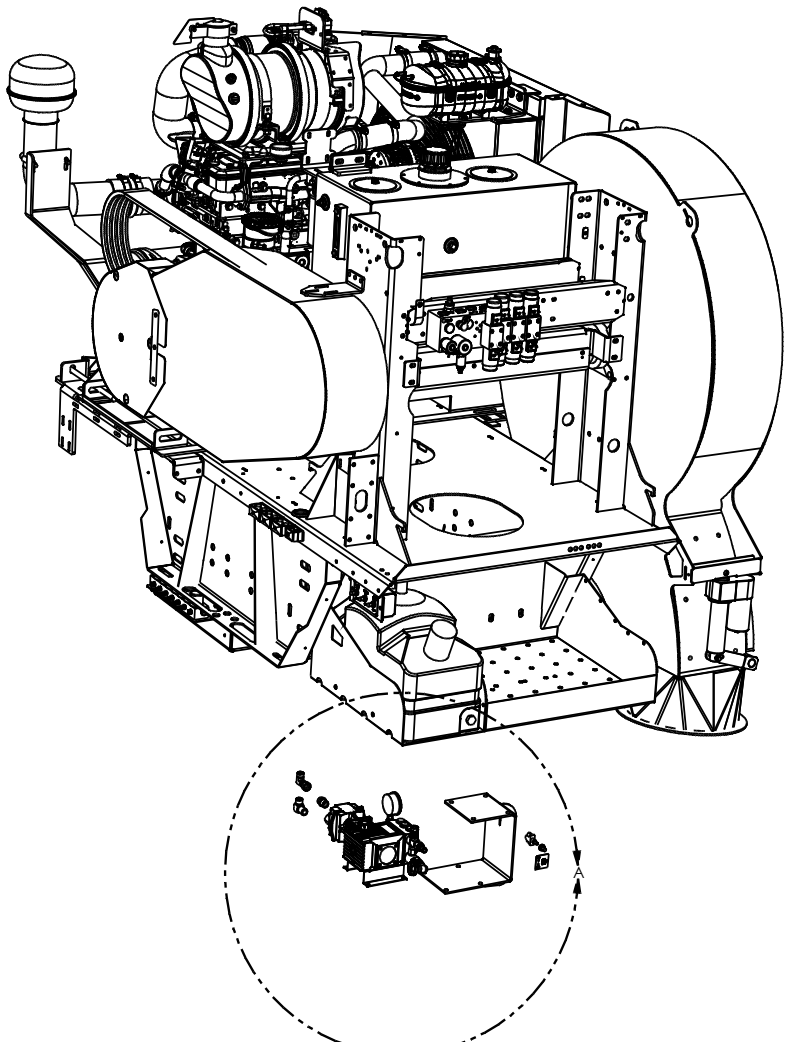

ITEM NO.	PART NUMBER	QTY.	DESCRIPTION
1	523043	1	HANGER,PUMP,HI-PR,WATR
2	68185	1	2000 PSI, PUMP-MOTOR
3	65924	1	ELBOW, 90° 1/2 NPT TO 3/4 HB
4	65635	1	ELBOW, 90° 1/2 MORFS X 1/2 NPT
5	64078	1	ADAPTER, 1/2 MORFS X 1/2 MNPT
6	61050	1	ELBOW 90 1/2 MORFS X 1/2 FORFS
7	23005	1	SWITCH, SPST WATERPROOF
8	65675	1	SWITCH, BOOT, RED
9	65747	1	PANEL, PRESSURE WASHER
10	61014	2	1/2" MORFS X 1/2" MORB
11	24687	2	HOSE CLAMP 2"
12	66293	1	CONNECTOR, 1 NPT X 3/4 HOSE B
13	22040	1	DO3 VALVE, 4WE6G6X/EG12N9K4

ITEMS BELOW NOT SHOWN

ITEM NO.	PART NUMBER	QTY.	DESCRIPTION
14	525571	2	HOSE, MANIFOLD TO HP PUMP
15	24308	1	DIN CONNECTOR
16	21639	20 ft	WIRE, 18 GA-BLUE
17	20281	20 ft	HOSE, FLEXGUARD 250
18	54678	132 in	HOSE, 3/4" FLEX
19	20155	1	CLAMP, 1 1/2 COATED

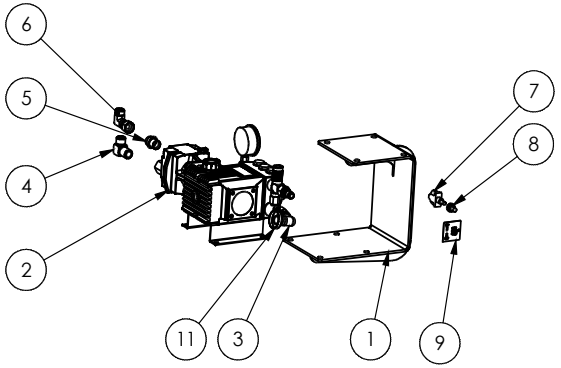

DETAIL A

204Q55 - HP WTR W/TT

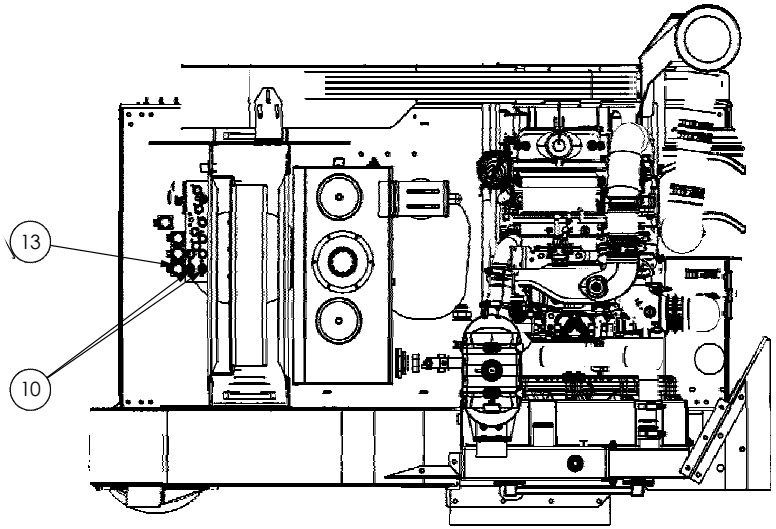

TOP VIEW

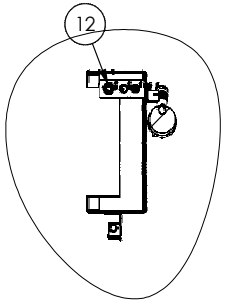

SECTION B-B

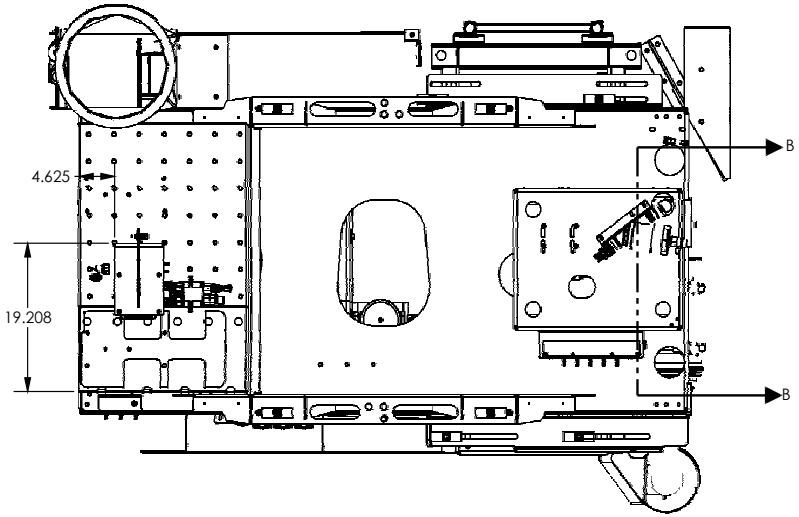

BOTTOM VIEW

204Q59 - HOSE REEL M2

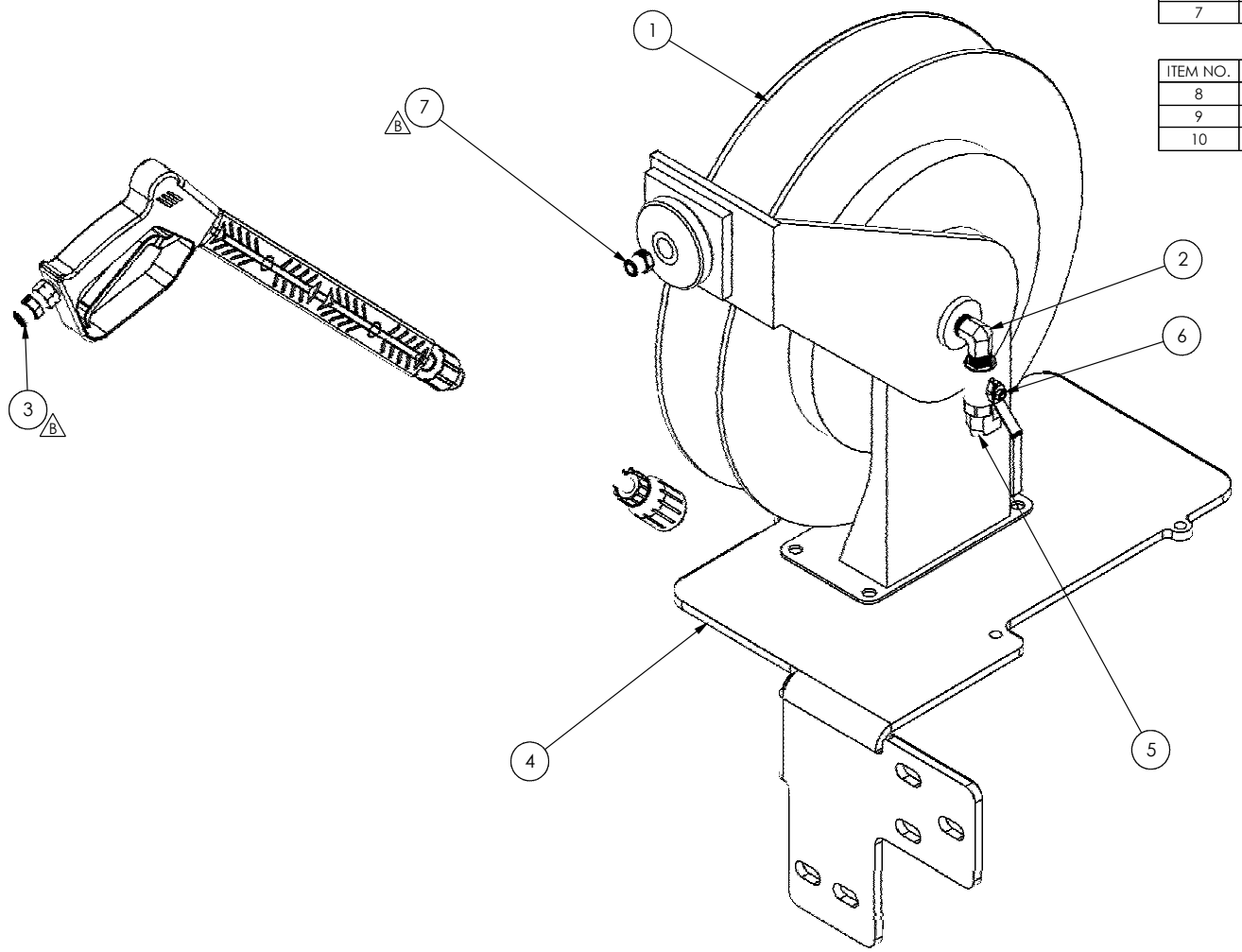

ITEM NO.	PART NUMBER	QTY.	DESCRIPTION
1	22112	1	HOSE REEL
2	20965	1	1/2 NPT MALE PIPE 90
3	20165	1	3/8 NIPPLE NPT PIPE (STEEL)
4	5222965	1	MOUNT/TIE DOWN, DEF TANK, A7T
5	20186	1	ELBOW,90°,1/2 MNPT X 1/2 MJIC
6	27027	1	1/2" FEMALE BALL VALVE
7	28223	1	REDUCER, 3/8 MNPT X 1/4 FNPT

ITEMS BELOW NOT SHOWN

ITEM NO.	PART NUMBER	QTY.	DESCRIPTION
8	20195	1	ELBOW, 90° 3/8 NPT X 1/2 JIC
9	34767	1	3/8" FPT COUPLING, STEEL
10	53042	1	HIGH PRESSURE HOSE ASSY

204Q56 - HOSE REEL M2

ITEM NO.	PART NUMBER	QTY.	DESCRIPTION
1	22112	1	HOSE REEL
2	525449	1	MOUNT, HP HOSE REEL
3	28223	1	REDUCER, 3/8 MNPT X 1/4 FNPT
4	20965	1	1/2 NPT MALE PIPE 90
5	20165	1	3/8 NIPPLE NPT PIPE (STEEL)
6	27027	1	1/2" FEMALE BALL VALVE
7	20186	1	ELBOW,90°,1/2 MNPT X 1/2 MJIC

ITEMS BELOW NOT SHOWN

ITEM NO.	PART NUMBER	QTY.	DESCRIPTION
8	20195	1	ELBOW, 90° 3/8 NPT X 1/2 JIC
9	34767	1	3/8" FPT COUPLING, STEEL
10	53042	1	HIGH PRESSURE HOSE ASSY

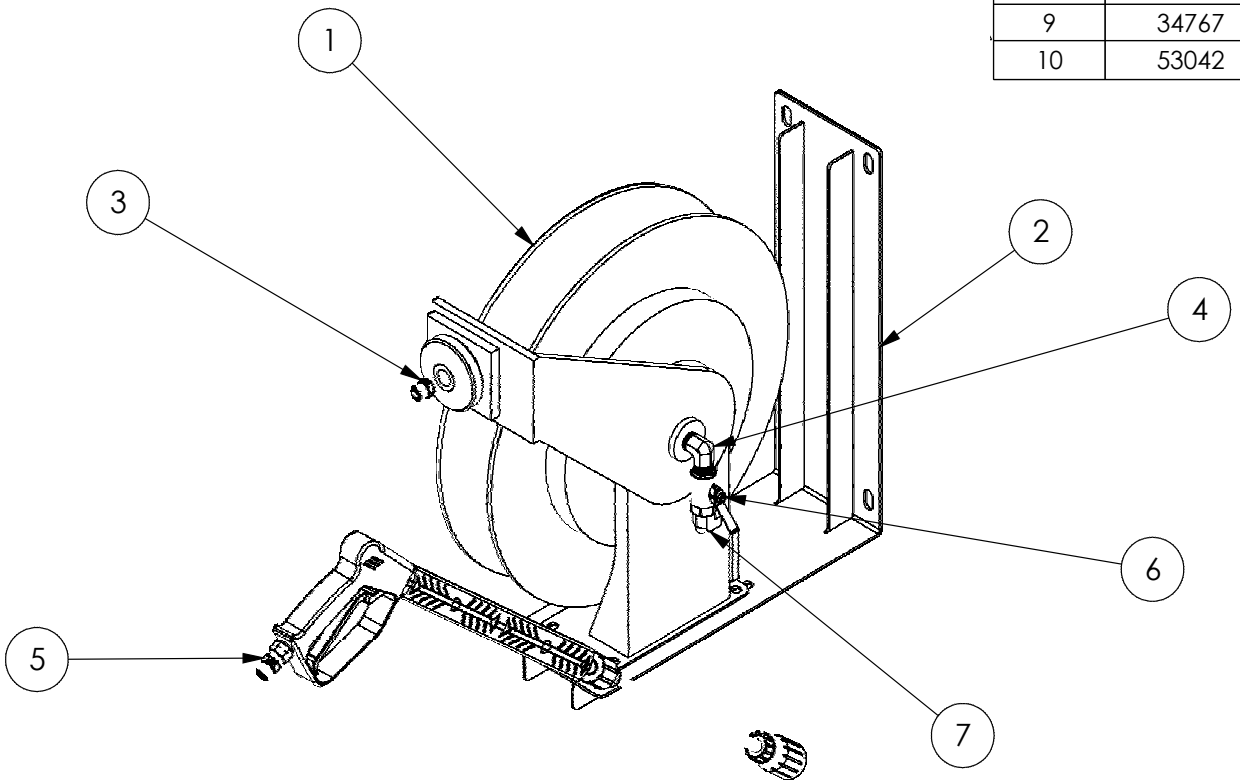

204Q58 - HOSE REEL 350 TK

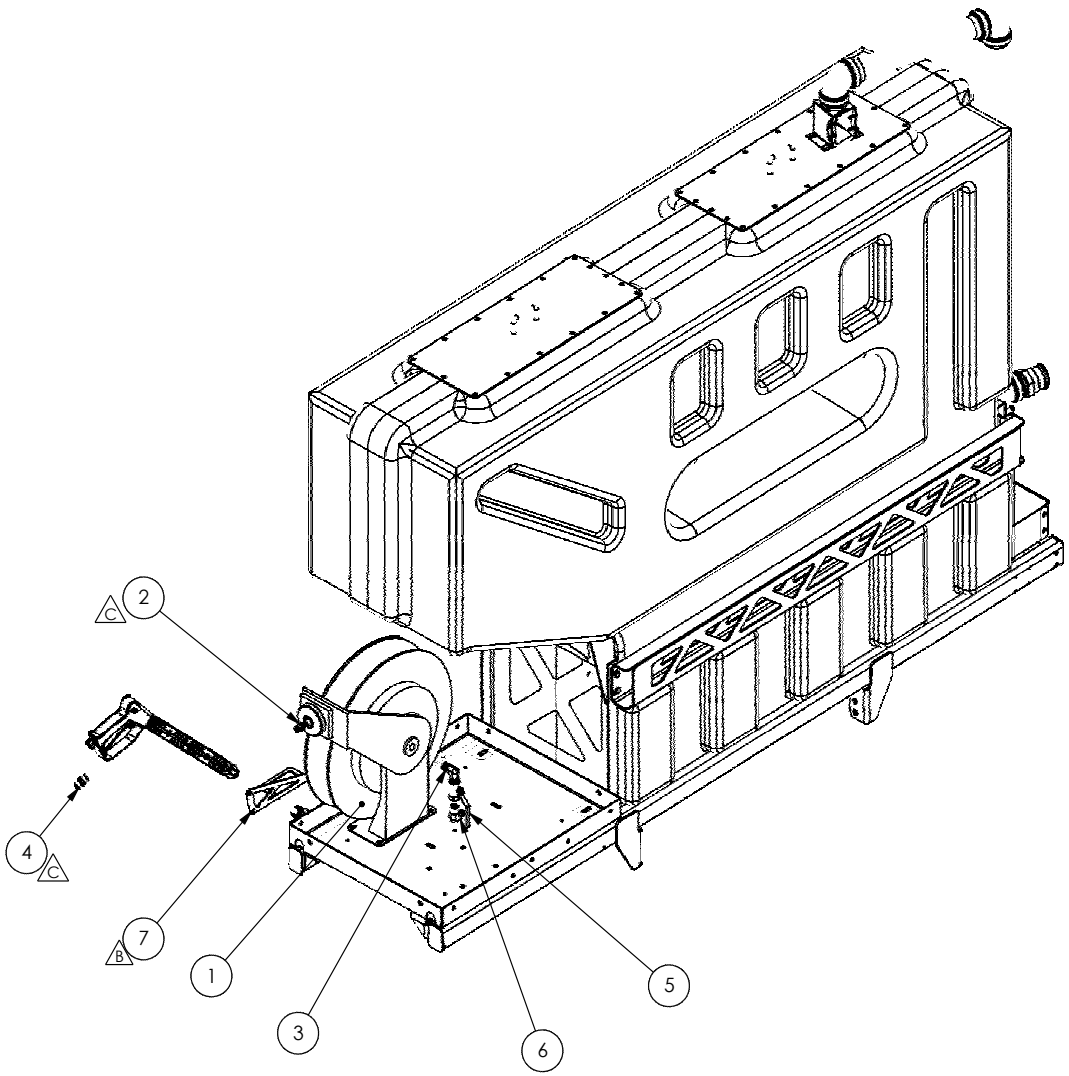

ITEM NO.	PART NUMBER	QTY.	DESCRIPTION
1	22112	1	HOSE REEL
2	28223	1	REDUCER, 3/8 MNPT X 1/4 FNPT
3	20965	1	1/2 NPT MALE PIPE 90
4	20165	1	3/8 NIPPLE NPT PIPE (STEEL)
5	27027	1	1/2" FEMALE BALL VALVE
6	20186	1	ELBOW,90°,1/2 MNPT X 1/2 MJIC
7	5221356	1	SPRAY GUN HOLSTER

ITEMS BELOW NOT SHOWN

ITEM NO.	PART NUMBER	QTY.	DESCRIPTION
8	53042	1	HIGH PRESSURE HOSE ASSY
9	20195	1	ELBOW, 90° 3/8 NPT X 1/2 JIC
10	34767	1	3/8" FPT COUPLING, STEEL

204Q64 - HP WATER SW

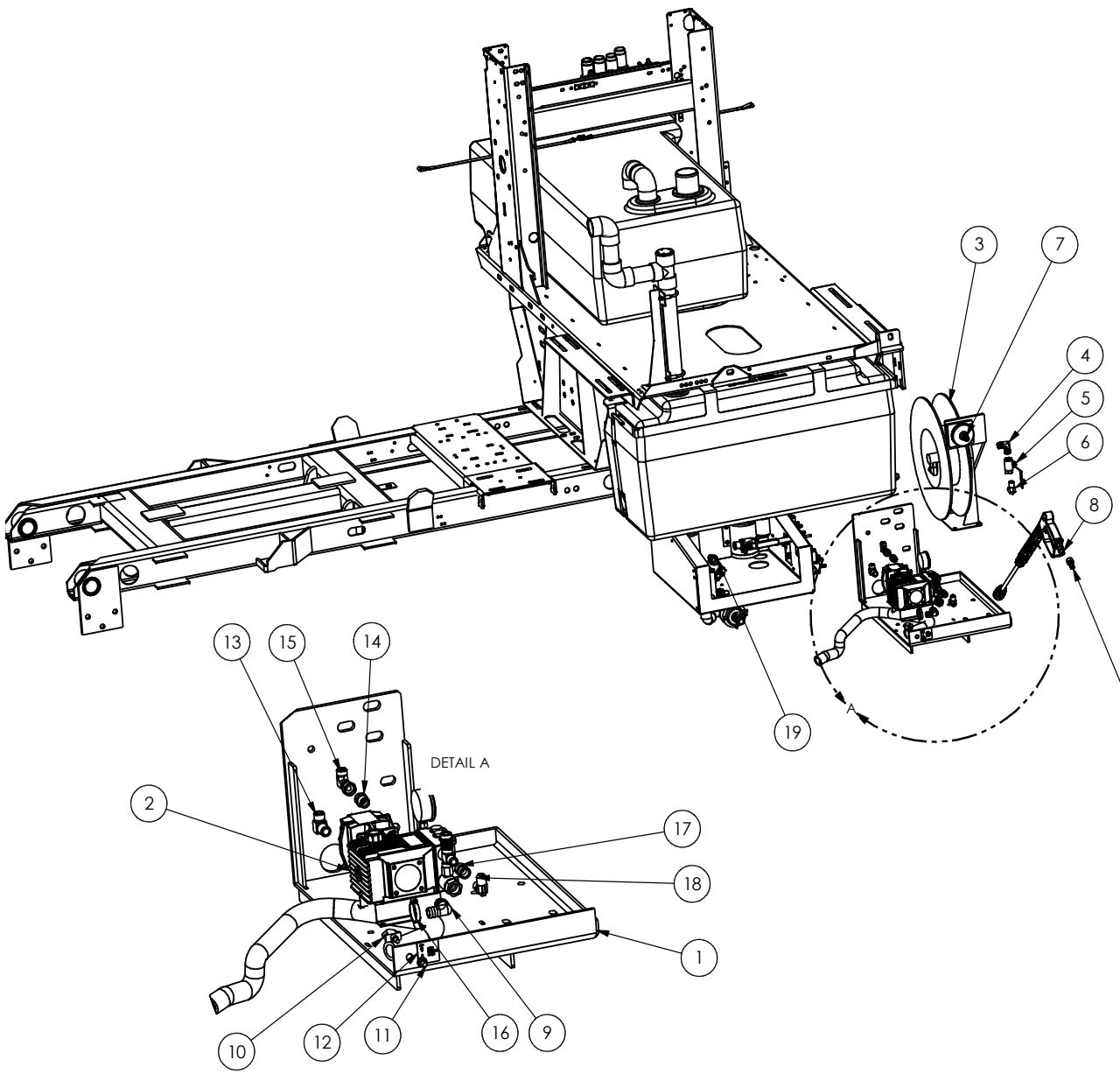

ITEM NO.	PART NUMBER	QTY.	DESCRIPTION
1	525502	1	MOUNT, HP WTR, SW
2	68185	1	2000 PSI, PUMP-MOTOR
3	22112	1	HOSE REEL
4	20965	1	1/2 NPT MALE PIPE 90
5	27027	1	1/2" FEMALE BALL VALVE
6	20186	1	ELBOW,90°,1/2 MNPT X 1/2 MJIC
7	28223	1	REDUCER, 3/8 MNPT X 1/4 FNPT
8	20165	1	3/8 NIPPLE NPT PIPE (STEEL)
9	65924	1	ELBOW, 90° 1/2 NPT TO 3/4 HB
10	23005	1	SWITCH, SPST WATERPROOF
11	65675	1	SWITCH, BOOT, RED
12	65747	1	PANEL, PRESSURE WASHER
13	65635	1	ELBOW, 90° 1/2 MORFS X 1/2 NPT
14	64078	1	ADAPTER, 1/2 MORFS X 1/2 MNPT
15	61050	1	ELBOW 90 1/2 MORFS X 1/2 FORFS
16	24687	2	HOSE CLAMP 2"
17	34767	1	3/8" FPT COUPLING, STEEL
18	20195	1	ELBOW, 90° 3/8 NPT X 1/2 JIC
19	66293	1	CONNECTOR, 1 NPT X 3/4 HOSE B
20	61014	2	1/2" MORFS X 1/2" MORB
21	22040	1	DO3 VALVE

ITEMS BELOW NOT SHOWN

ITEM NO.	PART NUMBER	QTY.	DESCRIPTION
22	525570	2	HOSE, MANIFOLD TO HP PUMP
23	24308	1	DIN CONNECTOR
24	21639	20 ft	WIRE, 18 GA-BLUE
25	20281	20 ft	HOSE, FLEXGUARD 250
26	54678	132 in	HOSE, 3/4" FLEX
27	20155	1	CLAMP, 1 1/2 COATED
28	53042	1	HIGH PRESSURE HOSE ASSY

NOTE 3/8" FPT x MALE QUICK DISCONNECT FITTING IS REMOVED FROM PUMP PRESSURE SIDE TO BE ATTACHED TO THE SPRAYER WAND.

204Q64 - HP WATER SW

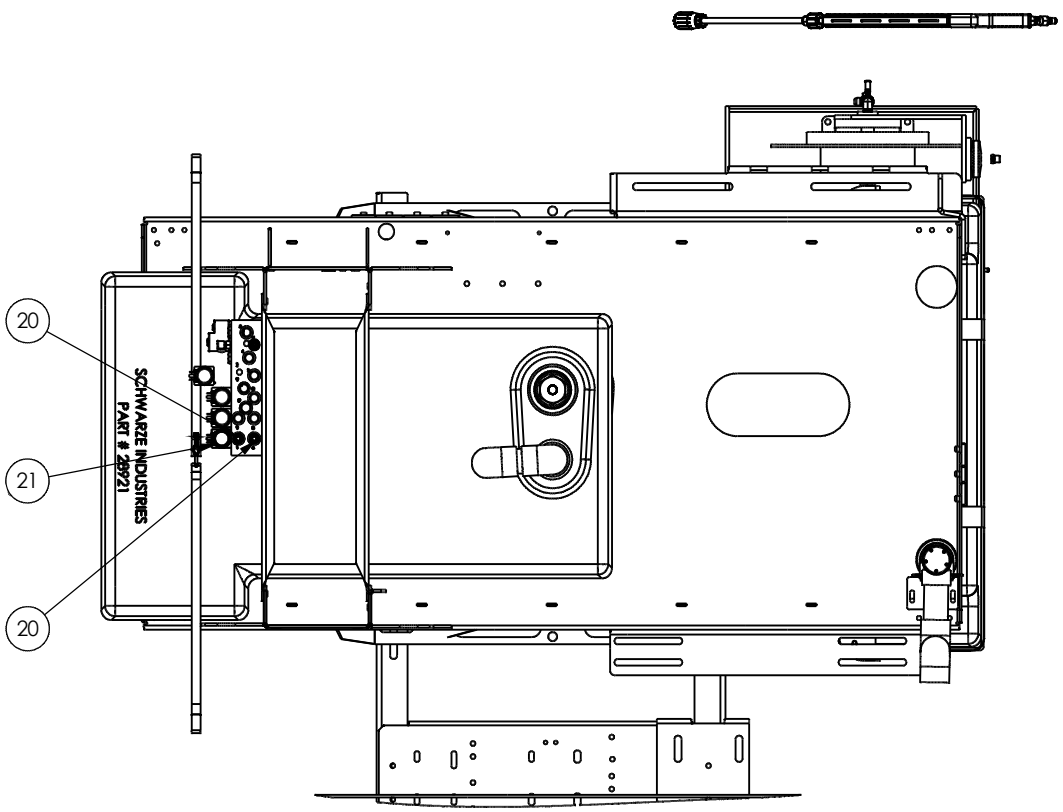

204T98 - TRAY, DUAL WP HI-PRESS

	ITEM NO.	PART NUMBER	QTY.	DESCRIPTION
	1	26995	1	BUSHING, 3/4 NPT 1/8 NPT
	2	23676	1	VALVE, BRASS AIR TANK
	3	26932	1	HOSE BARB, 3/4" NPT TO 3/4"
	4	67514	1	VALVE, 3 WAY, 3/4" FNPT
	5	67515	1	FITTING, 3/4" MNPT X 3/4" MGHT
	6	20974	1	ELBOW 3/4" NPT 90 DEGREES
**	7	54678	25 FT	HOSE, 3/4" FLEX

**ITEMS NOT SHOWN IN DRAWING

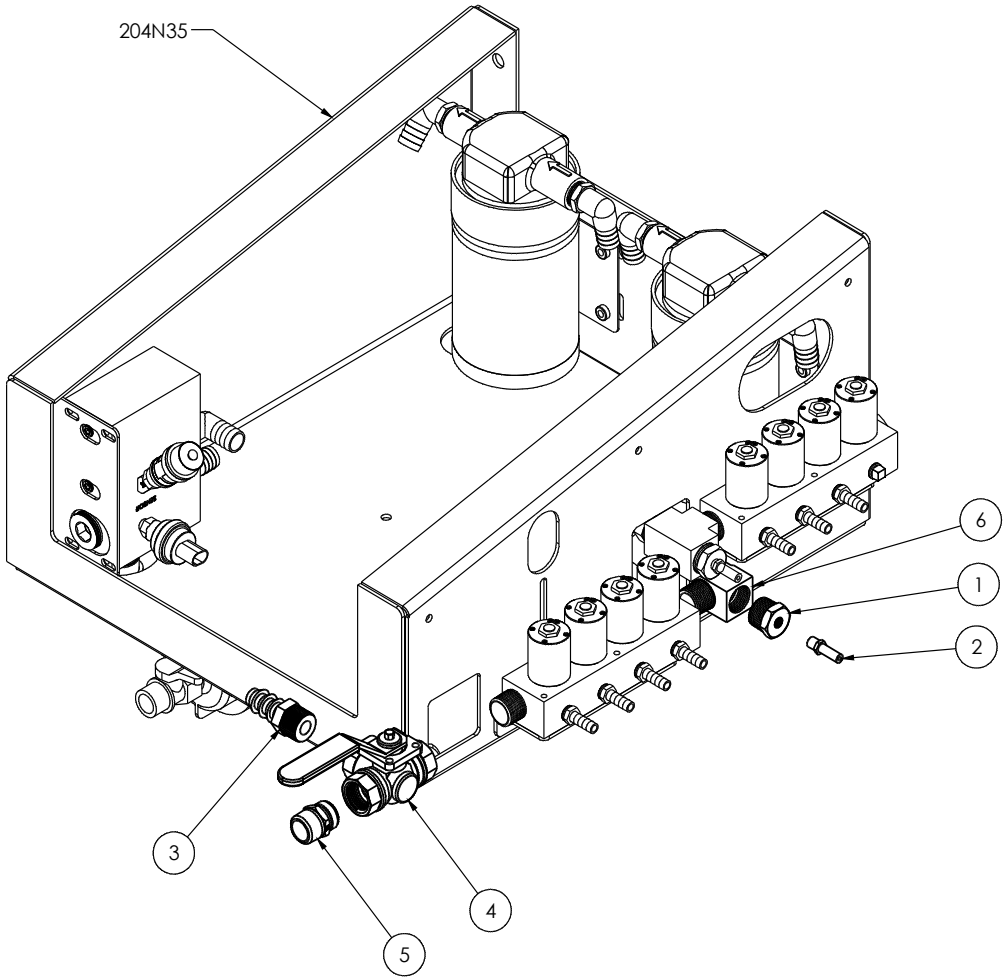

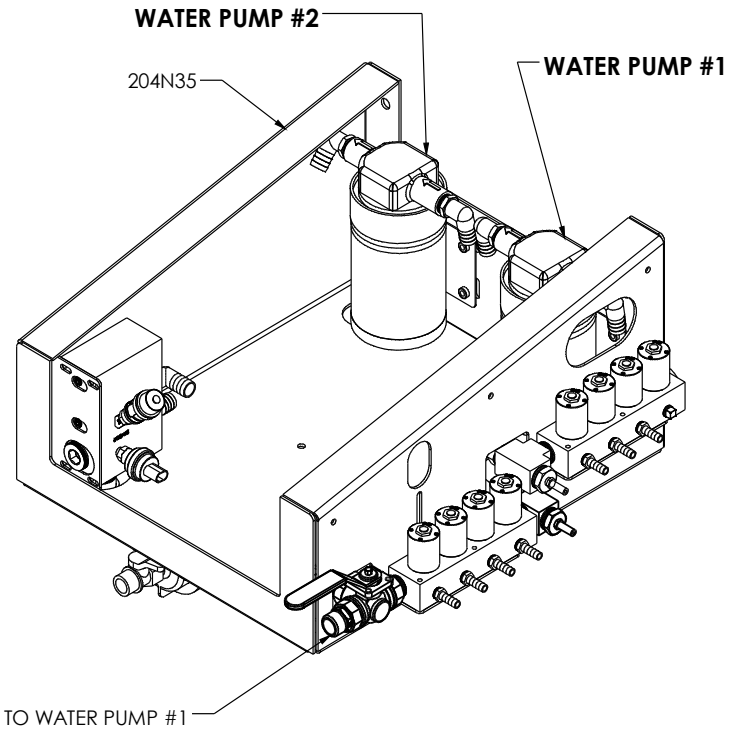

204U00 - TRAY, DUAL WP

	ITEM NO.	PART NUMBER	QTY.	DESCRIPTION
	1	25182	8	CLAMP, HOSE 1-1/2 SIZE 16
	2	66288	1	ELBOW, 90° 3/4 NPT TO 3/4 HB
	3	23676	1	VALVE, BRASS AIR TANK
	4	26995	1	BUSHING, 3/4 NPT 1/8 NPT
	5	54982	1	VALVE, WATER 3/4 NPT
	6	26855	1	TEE, 3/4" NPT UNION BRASS
**	7	54678	20 FT	HOSE, 3/4" FLEX

** ITEMS NOT SHOWN IN DRAWING

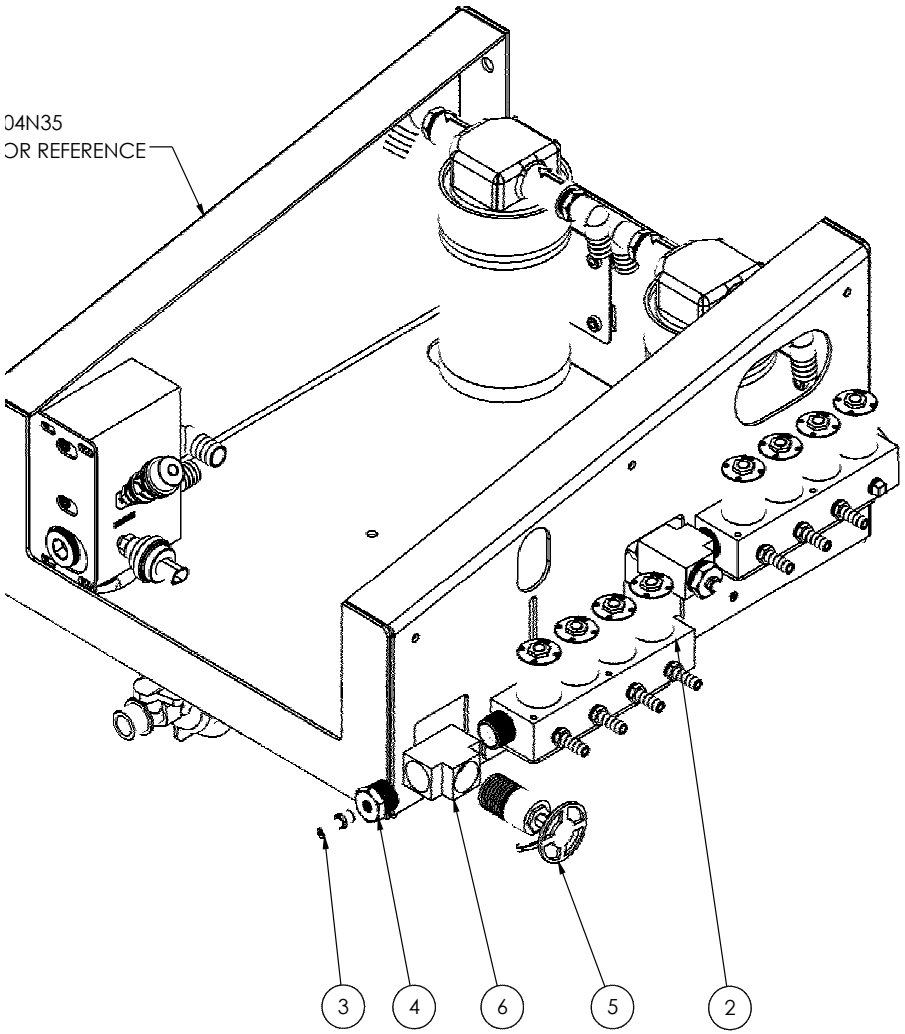

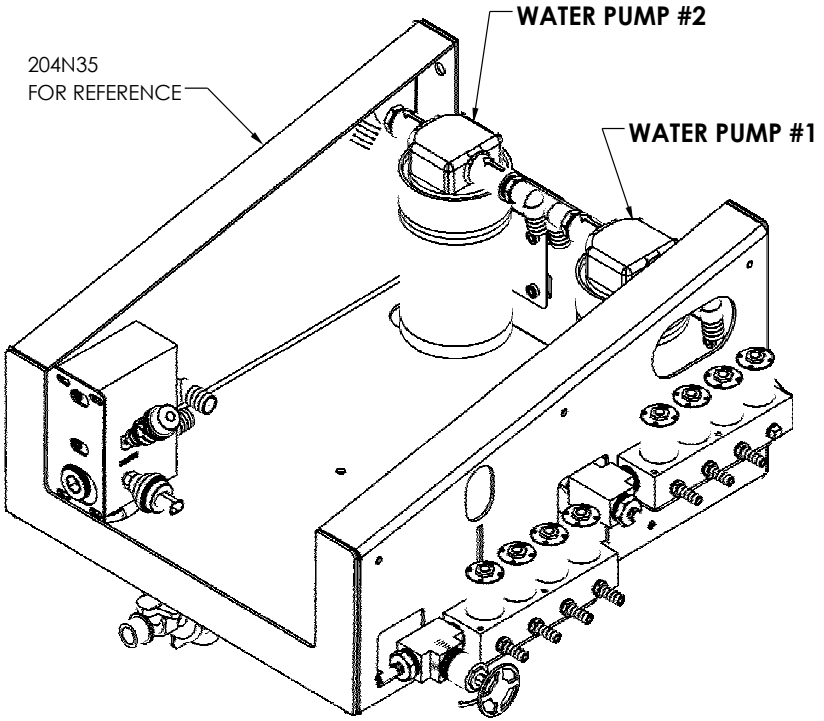

204Q63 - REAR WATER TANK

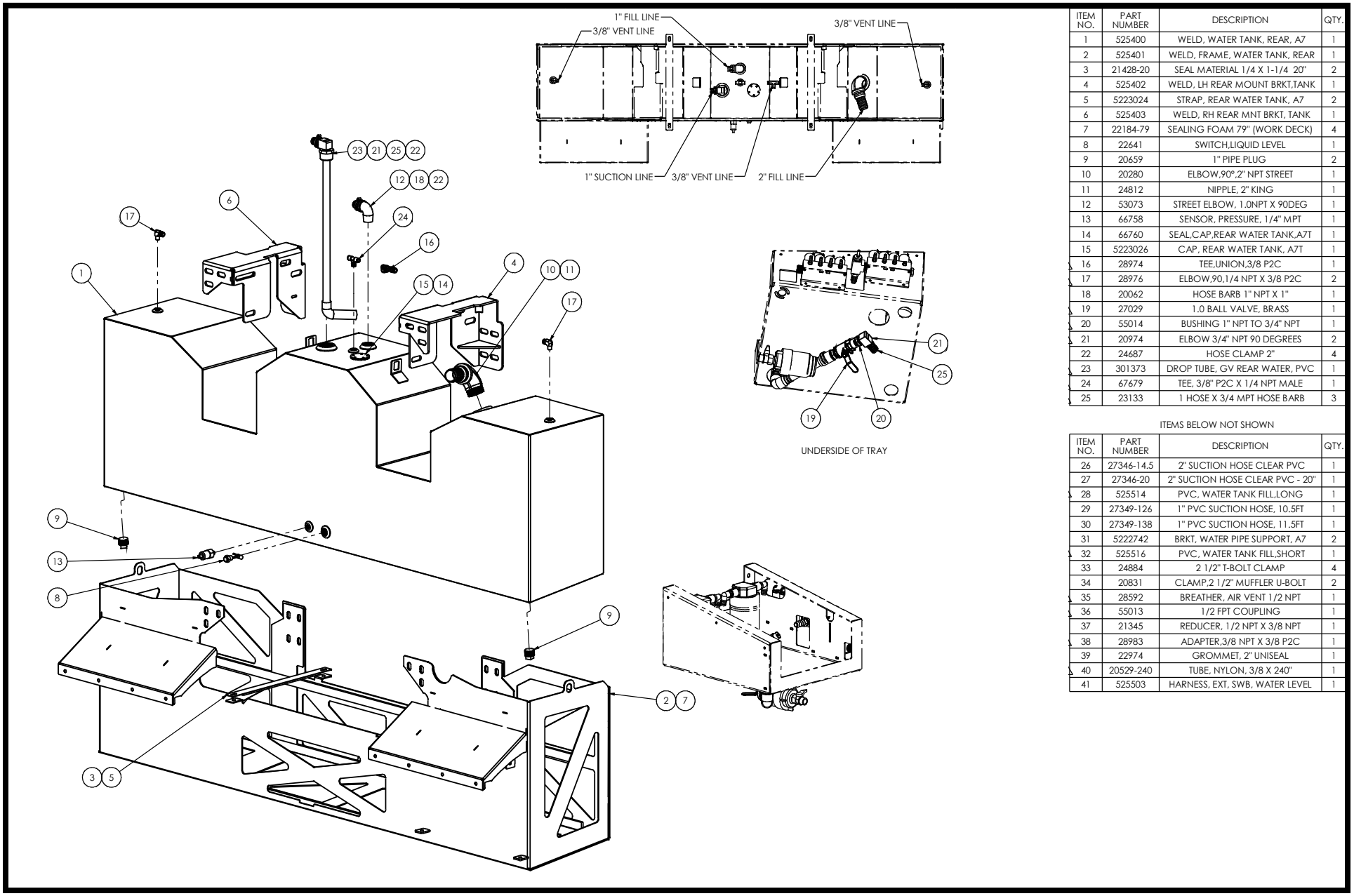

ITEM NO.	PART NUMBER	DESCRIPTION	QTY.
1	525400	WELD, WATER TANK, REAR, A7	1
2	525401	WELD, FRAME, WATER TANK, REAR	1
3	21428-20	SEAL MATERIAL 1/4 X 1-1/4 20"	2
4	525402	WELD, LH REAR MOUNT BRKT,TANK	1
5	5223024	STRAP, REAR WATER TANK, A7	2
6	525403	WELD, RH REAR MNT BRKT, TANK	1
7	22184-79	SEALING FOAM 79" (WORK DECK)	4
8	22641	SWITCH,LIQUID LEVEL	1
9	20659	1" PIPE PLUG	2
10	20280	ELBOW,90°,2" NPT STREET	1
11	24812	NIPPLE, 2" KING	1
12	53073	STREET ELBOW, 1.0NPT X 90DEG	1
13	66758	SENSOR, PRESSURE, 1/4" MPT	1
14	66760	SEAL,CAP,REAR WATER TANK,A7T	1
15	5223026	CAP, REAR WATER TANK, A7T	1
16	28974	TEE,UNION,3/8 P2C	1
17	28976	ELBOW,90,1/4 NPT X 3/8 P2C	2
18	20062	HOSE BARB 1" NPT X 1"	1
19	27029	1.0 BALL VALVE, BRASS	1
20	55014	BUSHING 1" NPT TO 3/4" NPT	1
21	20974	ELBOW 3/4" NPT 90 DEGREES	2
22	24687	HOSE CLAMP 2"	4
23	301373	DROP TUBE, GV REAR WATER, PVC	1
24	67679	TEE, 3/8" P2C X 1/4 NPT MALE	1
25	23133	1 HOSE X 3/4 MPT HOSE BARB	3

ITEMS BELOW NOT SHOWN

ITEM NO.	PART NUMBER	DESCRIPTION	QTY.
26	27346-14.5	2" SUCTION HOSE CLEAR PVC	1
27	27346-20	2" SUCTION HOSE CLEAR PVC - 20"	1
28	525514	PVC, WATER TANK FILL,LONG	1
29	27349-126	1" PVC SUCTION HOSE, 10.5FT	1
30	27349-138	1" PVC SUCTION HOSE, 11.5FT	1
31	5222742	BRKT, WATER PIPE SUPPORT, A7	2
32	525516	PVC, WATER TANK FILL,SHORT	1
33	24884	2 1/2" T-BOLT CLAMP	4
34	20831	CLAMP,2 1/2" MUFFLER U-BOLT	2
35	28592	BREATHER, AIR VENT 1/2 NPT	1
36	55013	1/2 FPT COUPLING	1
37	21345	REDUCER, 1/2 NPT X 3/8 NPT	1
38	28983	ADAPTER,3/8 NPT X 3/8 P2C	1
39	22974	GROMMET, 2" UNISEAL	1
40	20529-240	TUBE, NYLON, 3/8 X 240"	1
41	525503	HARNESS, EXT, SWB, WATER LEVEL	1

204N31 - INTAKE RELOCATION, NY DOT

ITEM NO.	PART NUMBER	DESCRIPTION	QTY.
1	66284	ELBOW, 4"LWR, INTAKE RELOCATE	1
2	66285	ELBOW, 4", MID, INTAKE RELOCAT	1
3	66287	S-PIPE, 4", INTAKE RELOCATE	1
4	204J98	AIR INTAKE RELOCATION ASSY, A	1
5	66286	ELBOW, 4"TOP, INTAKE RELOCATE	1
6	20834	CLAMP, 4: SEAL	3
7	23603	PRE-CLEANER, 4"	1

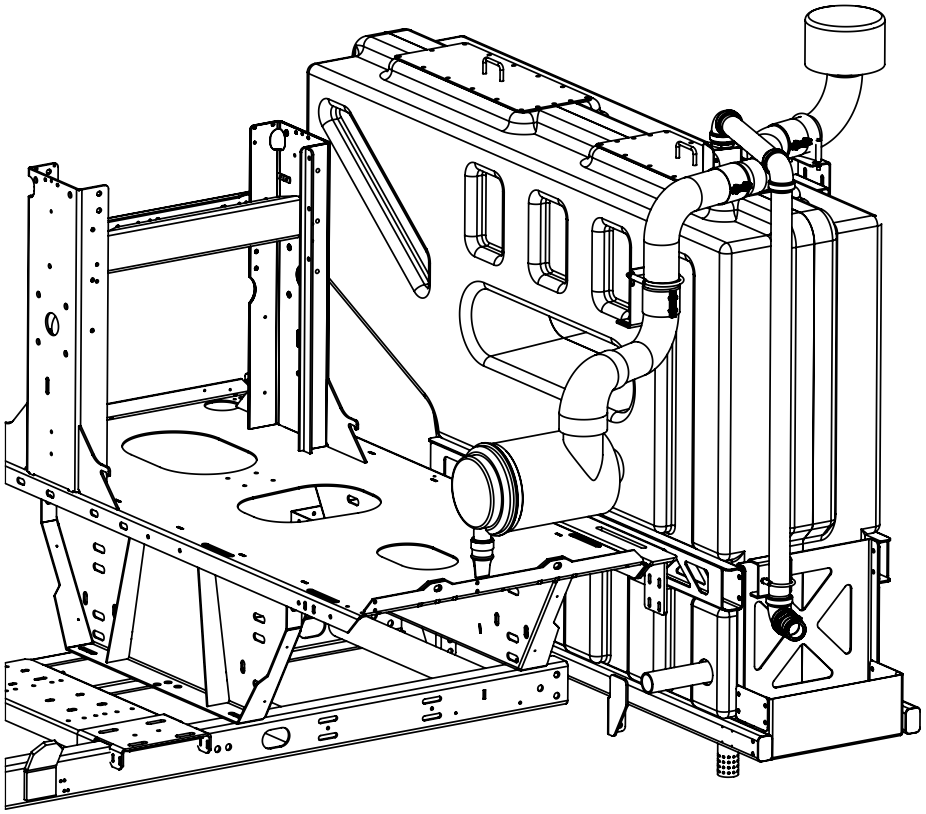

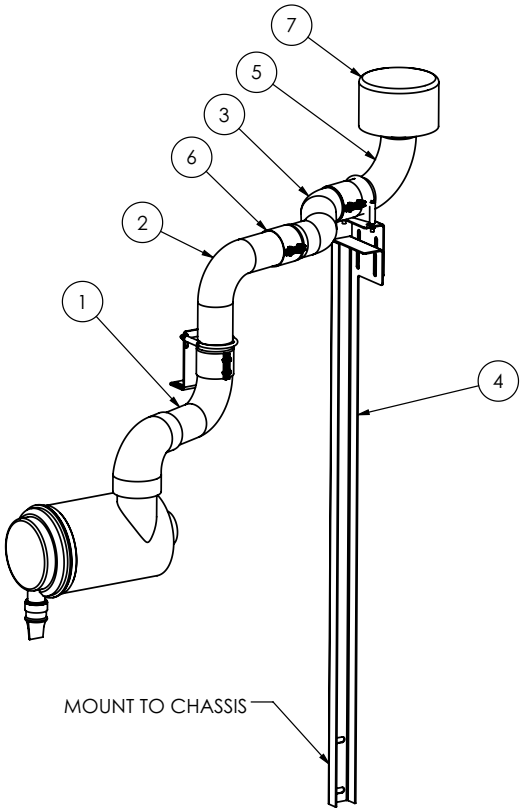

204J98 - AIR INTAKE RELOCATION

ITEM NO.	PART NUMBER	DESCRIPTION	QTY.
1	5221371	AIR INTAKE RELOCATION POST, A	1
2	5221372	AIR INTAKE RELOCATION ADJ PLA	1
3	20357	CLAMP, 4" U-BOLT	1

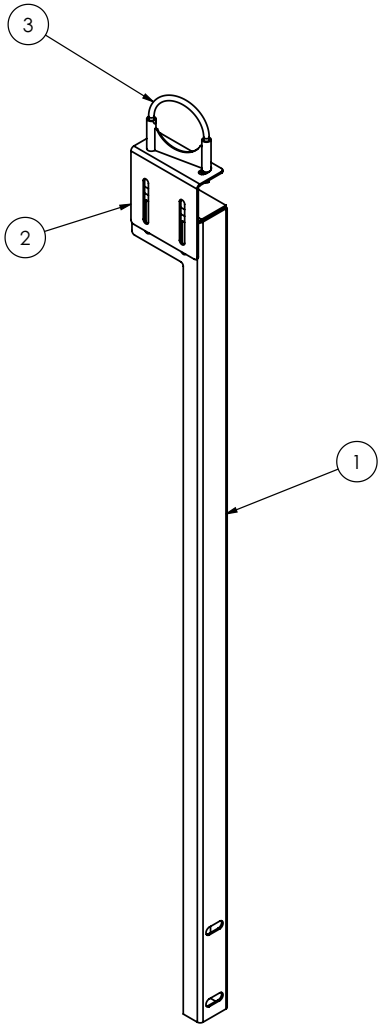

203Z21 - BRAKE LIGHT, REAR CENTER

ITEM NO.	PART NUMBER	QTY.	DESCRIPTION
1	524095	1	HOPPER BEACON BRACKET, LED OVA
2	59875	1	GROMMET, OVAL 6"
3	55625	1	LIGHT, 6.5" WIDE, RED LED
4	62520	1	LIGHT, BAR RED. LED

ITEMS NOT SHOWN

ITEM NO.	PART NUMBER	QTY.	DESCRIPTION
5	23083	1	CONNECTOR, 4 TERM SHROUD
6	23342	1	CONNECTOR, TOWER 4 TERM
7	20313	2	WIRE, 14 GA-RED
8	22922	2	WIRE, 14 GA-RED
9	20317	2	WIRE, 14 GA-BLUE
10	20312	2	WIRE, 14 GA-BROWN
11	28731	1	PIGTAIL, RED, WHITE, & BLUE

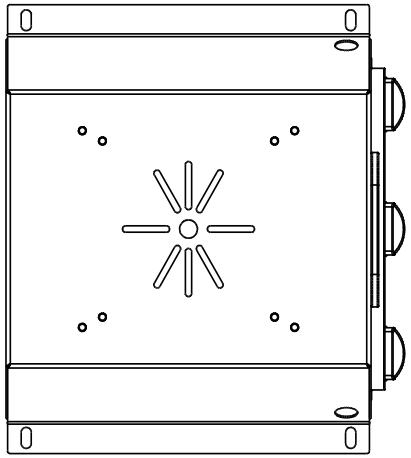

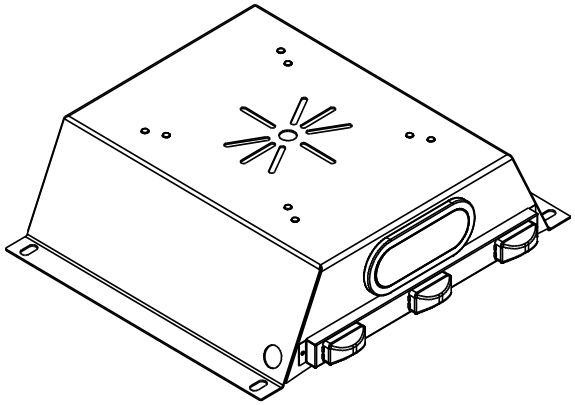

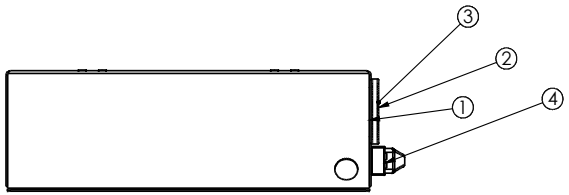

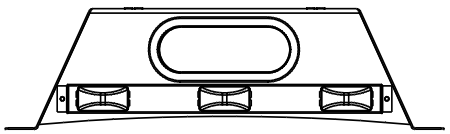

203G42 - SPRAY TIP

ITEM NO.	PART NUMBER	DESCRIPTION	EXP/QTY.
1	20408	MALE INLET 1/4 MPT	1
2	20420	SPRAY TIP RETAINER	1
3	66412	STRAINER, 50M BRASS, UNIJET	1
4	22429	SPRAY TIP, K-JET BRASS	1

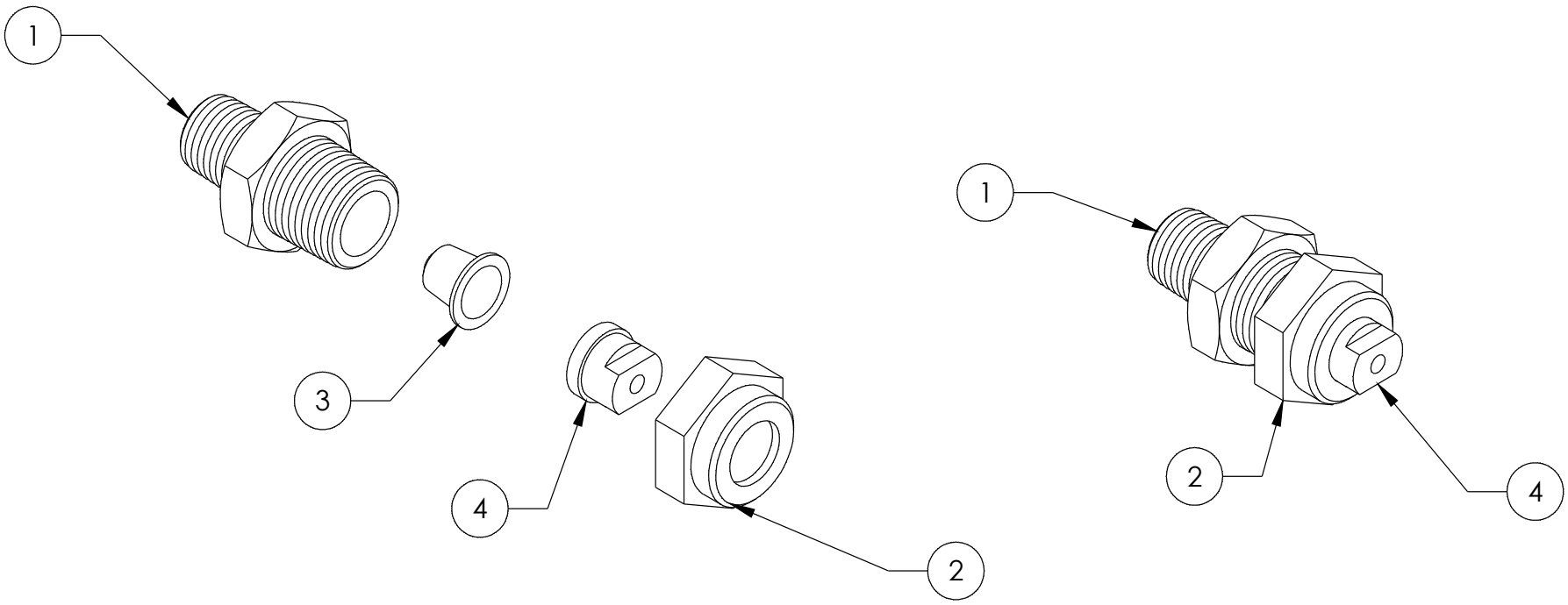

BACKUP ALARMS

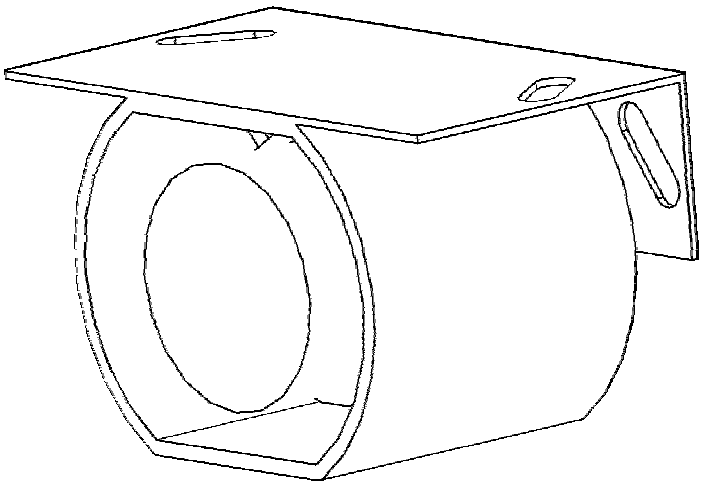

+204T84 BACK UP ALARM AUTO

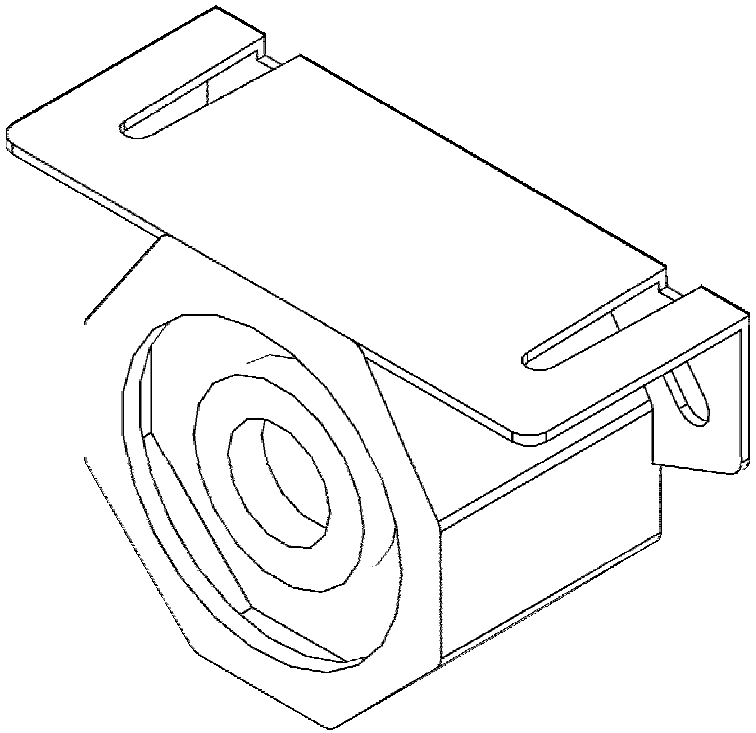

+204T85 BACK UP ALARM Y ECCO

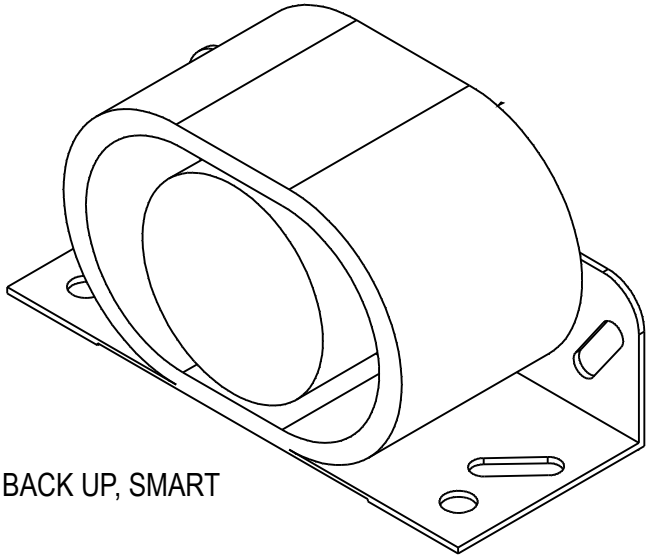

+204P76 ALARM, BACK UP, SMART

204N55 - BUMPER REAR

ITEM NO.	PART NUMBER	DESCRIPTION	QTY.
1	524081	BUMPER, REAR, A7000 2010, OVAL	1
2	59875	GROMMET, OVAL 6"	6
3	60800	LIGHT, 6.5" LED BACKUP LIGHT	2
4	54209	LIGHT, 6.5" WIDE, AMBER, LED	2
5	55625	LIGHT, 6.5" WIDE, RED LED	2
6	27966	TAG SCREW RECEPTACLE INSERT	2
7	61541	LED PAR 36 FLOOD LIGHT	2
8	64595	CONNECTOR, 2WAY RECEPTACLE	2
9	64610	WEDGELOCK, 2 WAY RECEPTACLE, D	2
10	65875	HARNESS, BUMPER, A7T (NOT SHOWN)	1

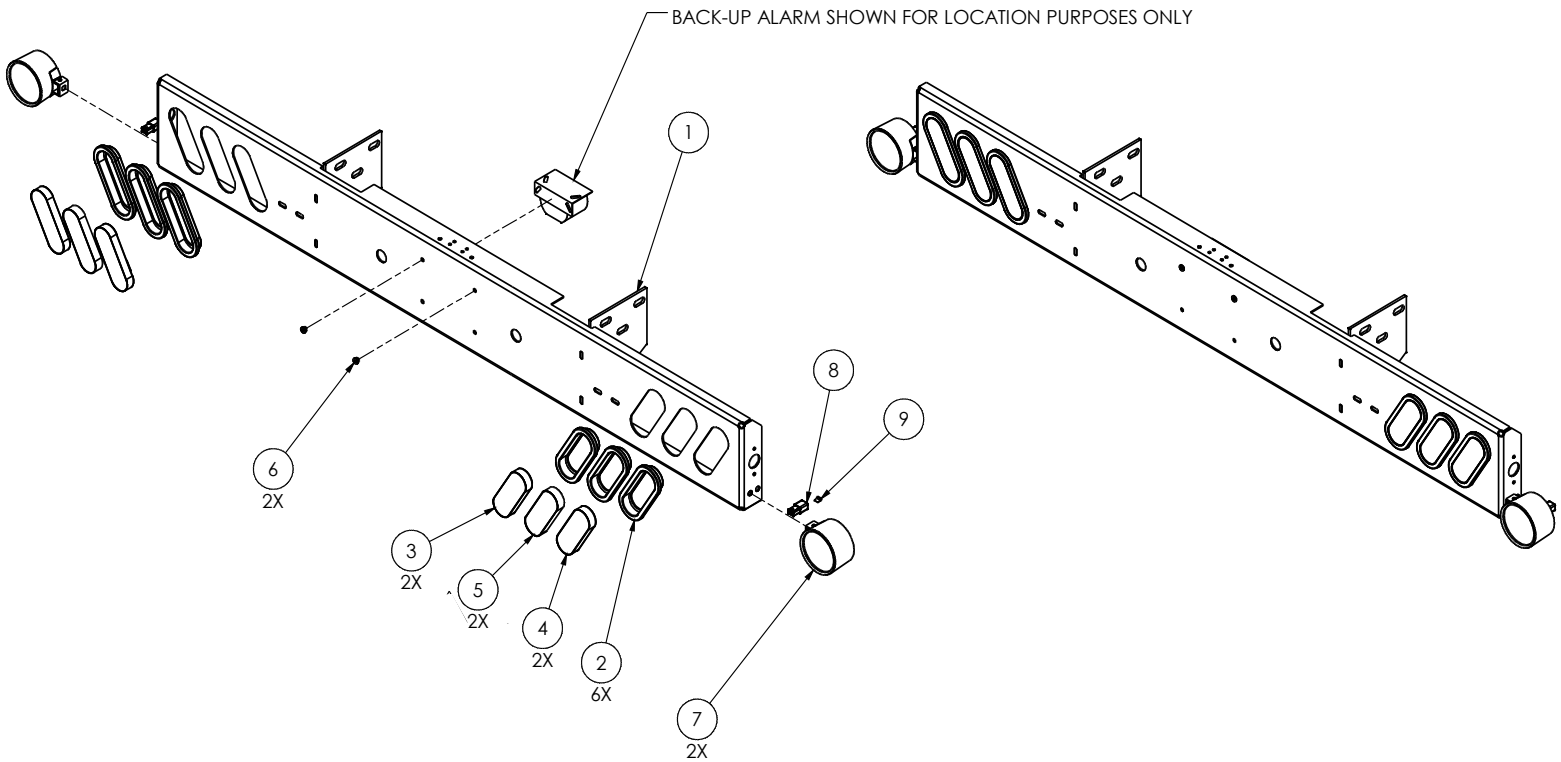

204Q19 - TRUCK KIT, A9T, M2 184

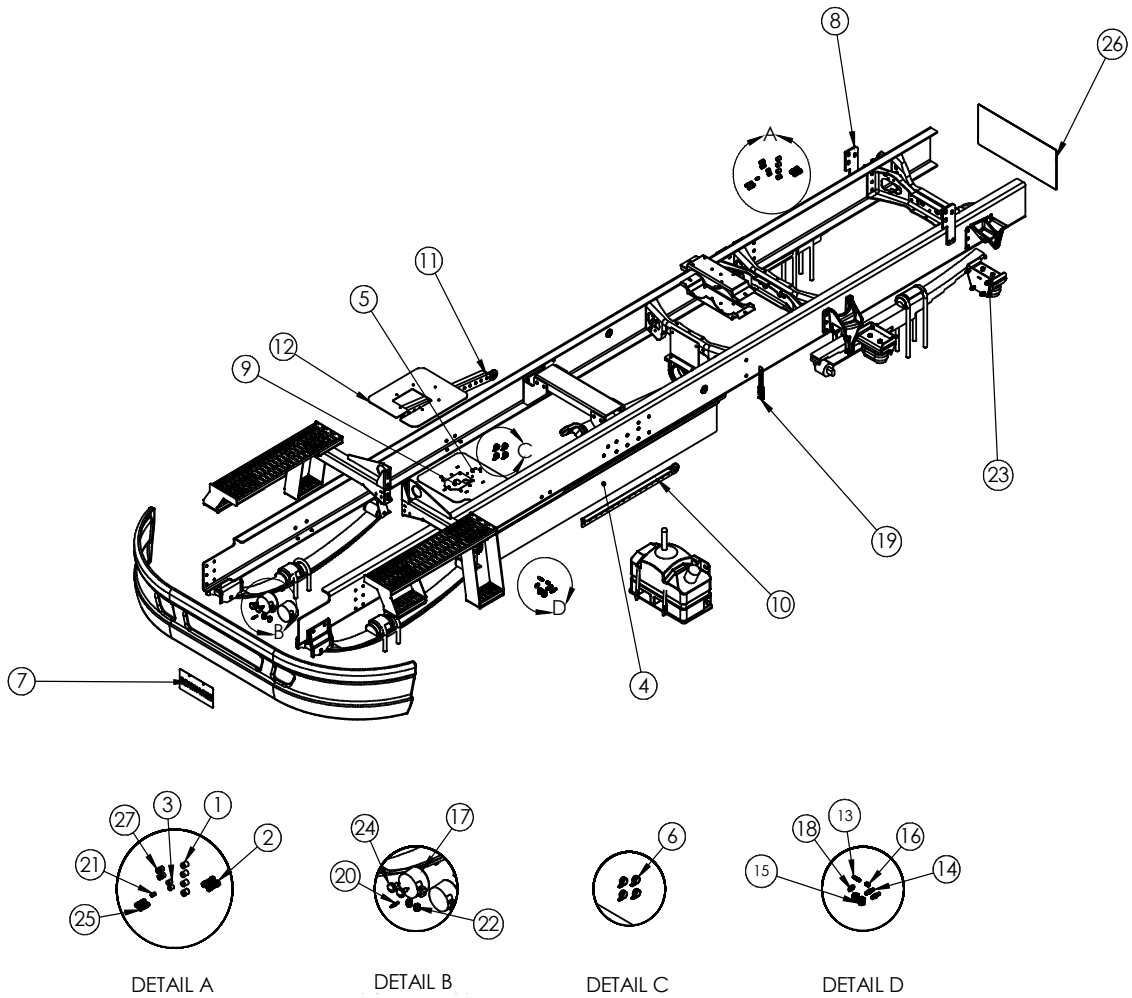

ITEM NO.	PART NUMBER	DESCRIPTION	QTY.
1	21342	REDUCER, 1/2 MNPT X 1/4 FNPT,BRASS	5
2	20164	UNION, 1/2 COMPRESSION	2
3	21349	BUSHING,3/8 MNPT X 1/4 FNPT BR	1
4	520030	CENTER DEFLECTOR, GUTTER BROOM	1
5	525045	CONSOLE PLATE WELD M2	1
6	20140	CLAMP, 1.0" RUBBER LINED	4
7	50448	LICENSE PLATE TAG	1
8	5222605	TIE DOWN, RH, A7T, SWB	2
9	6502339	PLATE, BULKHEAD, UD M6000	1
10	523822	WELD DRAG LNK FRNT EXT LEFT	1
11	523823	WELD DRAG LNK FRNT EXT RIGHT	1
12	5221430	UNDERCAB CONSOLE SUPPORT M2	1
13	20146	3/8 HOSE X 1/8 MALE PIPE HOSE	1
14	20070	3/8 HOSE X 1/4 MALE PIPE HOSE	2
15	20258	3/4" X 1/2" BUSHING	2
16	21930	PLUG, 1/4" NPT VENTED PIPE	1
17	20339	CURB LIGHT WITH BRACKET	2
18	20815	3/16" CHAIN LINK	6.5 FT
19	21025	TAILPIPE HANGER	1
20	20135	BARB,5/16 HOSE X 1/8 MNPT	1
21	20131	COUPLING,1/8 NPT BRASS	1
22	20248	1/2" X 3/8" BUSHING, BLACK IRON	2
23	203V10	SPRING KIT, RUBBER, GMC	1
24	21093	UTILITY LIGHT	2
25	22442	UNION, 3/8 AIRBRAKE, BRASS	2
26	21706	FLAP, 1/8 X 12 SKIRTBOARD	2
27	20897	1/4" COUPLING, BRASS	2

ITEMS NOT SHOWN

ITEM NO.	PART NUMBER	DESCRIPTION	QTY.
28	22623	TUBE, FUEL PICK UP, 235TE	10 FT
29	20541-5.5	5/16 X 5.5 FUEL HOSE	5.5 FT
30	20541	5/16 X 36 FUEL HOSE	36 FT
31	20281	FLEXGUARD, 250 - 1/4" X 20'	10 FT
32	20534	1/4" I.D. FUEL LINE	8 FT
33	20529	TUBING, 3/8 NYLON	25 FT
34	20540	HOSE, 3/8 FUEL PER FOOT	10 FT
35	21909	TUBING, 5/8" NYLON	25 FT
36	20357	CLAMP, 4" U-BOLT	1
37	522167	CABLE, BATTERY 2' LONG	1
38	522185	CABLE, BATTERY 3' LONG 6GA	1
39	50327	CABLE, BATTERY 6 1/2 LONG	1
40	522939	CABLE, BATTERY 7' LONG	1
41	20312	WIRE, 14 GA-BROWN	10 FT
42	20314	WIRE, 14 GA- ORANGE	10 FT
43	29340	FLAP, CTR A7, A8, A9 IF & FL	1
44	29878	SHEATHING, 3" NYLON W/ VELCRO	14 FT
45	29885	CABLE, BATTERY 8 1/2 LONG	3
46	5223084	BRKT,CTR DEF FRT CHAIN, A-M2	1
47	65951	HARNESS, CONSOLE EXT, A7T M2	1
48	20150	HOSE CLAMP, #6	2
49	24585	ABRASION SLEEVE 1.73" ID PER F	1
50	29955	CABLE, BATTERY 14' LONG	2
51	20054	UNION, 5/8 AIRBRAKE	2
52	21702	FLAP 1/4X6-1/2 SKRTBRD PER FT	2.5 FT
53	21910	UNION, 1/4" AIR BRAKE	1
54	24584	ABRASION SLEEVE 1.22" ID - FT	50 FT
55	29819	CABLE, BATTERY 13' LONG	1
56	24586	ABRASION SLEEVE 2.17" ID - FT	50 FT

203V10 - SPRING KIT, RUBBER, GMC

ITEM NO.	PART NUMBER	Default/QTY.	DESCRIPTION
1	523960	2	WELD,BKT,TIMB,GM-T7500,A7000
2	28525	2	RUBBER SPRING, TIMBREN
3	31603	12	1/2 SPLIT LOCKWASHER
4	32060	8	BOLT, 1/2-13 GR. 5 ALL THREAD
5	32752	4	BOLT, 1/2-20 X 1 1/2 GD 5 ZINC
6	27000	8	NUT, LOCK 1/2

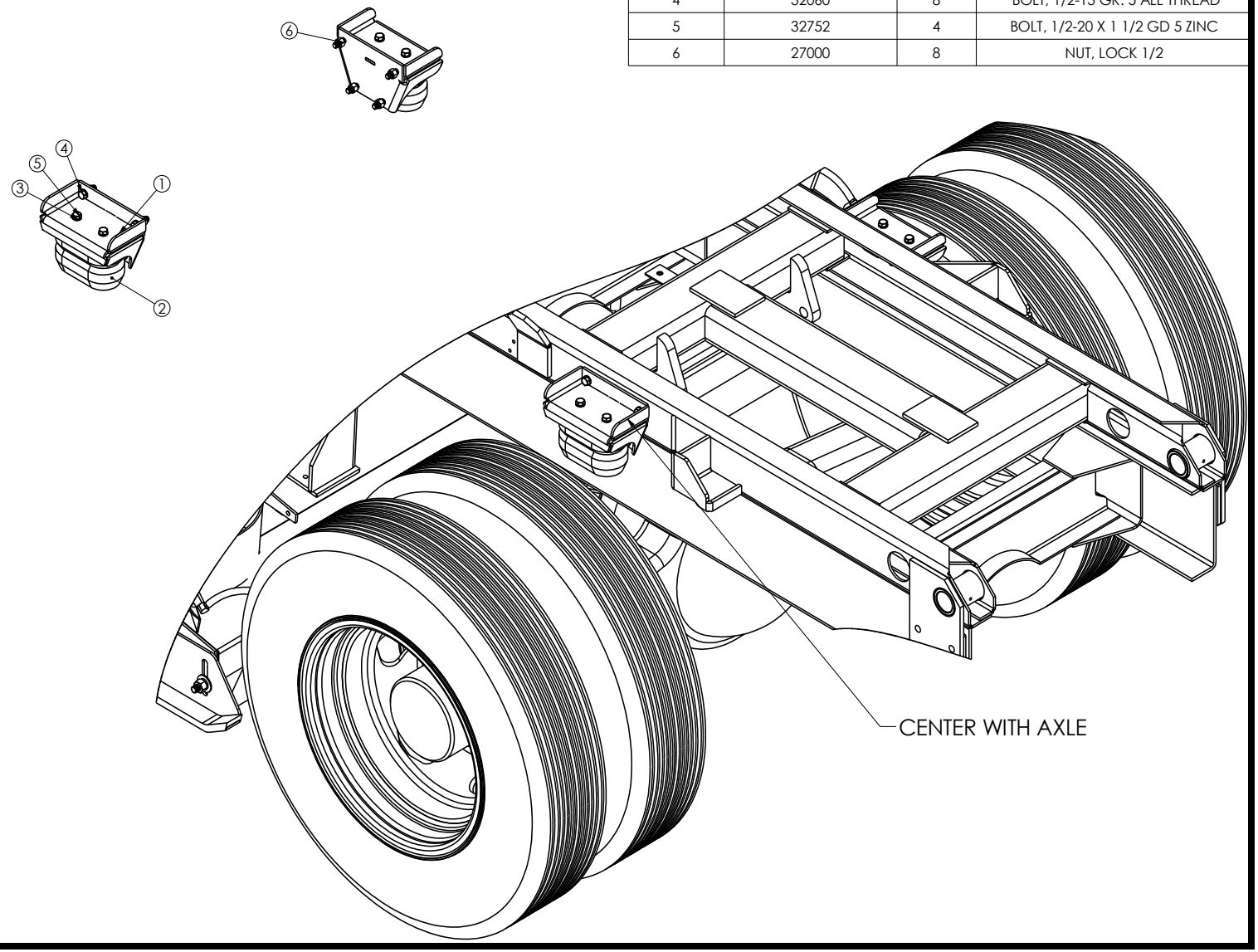

204P63 - LOAD WEIGHT INDICATOR

ITEM NO.	PART NUMBER	Default/QTY.	DESCRIPTION
1	5223206	1	ADAPTER, LOAD WEIGHT PLATE
2	5223195	1	MOUNT, SENSOR, HALL EFFECT
3	5221584	1	LEVER, HALL EFFECT SENSOR, FAN
4	65794	1	SENSOR, HALL EFFECT
5	65399	2	HOSE CLAMP,5/16 HIGH PRESS
6	5223222	2	ROD, LOAD WEIGHT
7	65568	2	ROD END, 1/4-28 /2458K321
8	5223196	1	WRAP, UPPER LD WT GV
9	5222375	1	WRAP,AXLE LD WT IND,PTRBLT A8T

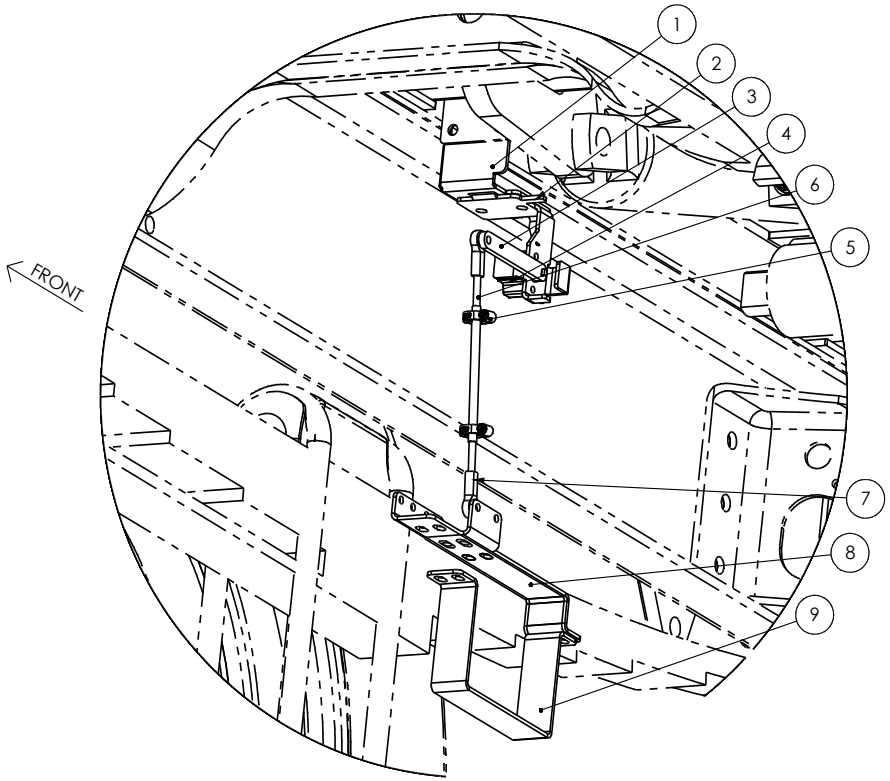

ASSEMBLY NOTES:
1. CUT A 5" LENGTH OF 1/4" FUEL LINE
2. CENTER FUEL LINE BETWEEN RODS (5223222)
3. NSTALL HOSE CLAMPS (65399)

INSTALL NOTES:

1. IN AN UNLOADED CONDITION, ON LEVEL GROUND, MOUNT THE SENSOR LEVER TO THE SENSOR USING A BUBBLE LEVEL.
2. MOUNT THE AXLE WRAP, UPPER AND LOWER TO THE REAR AXLE.
3. CONNECT THE LOAD ROD BETWEEN THE AXLE MOUNT AND THE SENSOR LEVER.

204L19 - FRAME

ITEM NO.	PART NUMBER	DESCRIPTION	QTY.
1	523169	TRANSITION TUBE MOUNT BRACKET	1
2	523170	TRANSITION TUBE WELDMENT	1
3	64227	DUMP CYLINDER W/ C'BALANCE	2
4	28272	BREAKER, 80 AMP	1
5	522870	FRAME MAIN, A7000	1
6	204L08	KIT, HOSE HOPPER LIFT	1
7	5221966	MOUNT, HOPPER DN PROX	1
8	61704	TURCK PRX SWITCH & BRKT	1
9	24964	WELDNUT, 1/4-20UNC	2

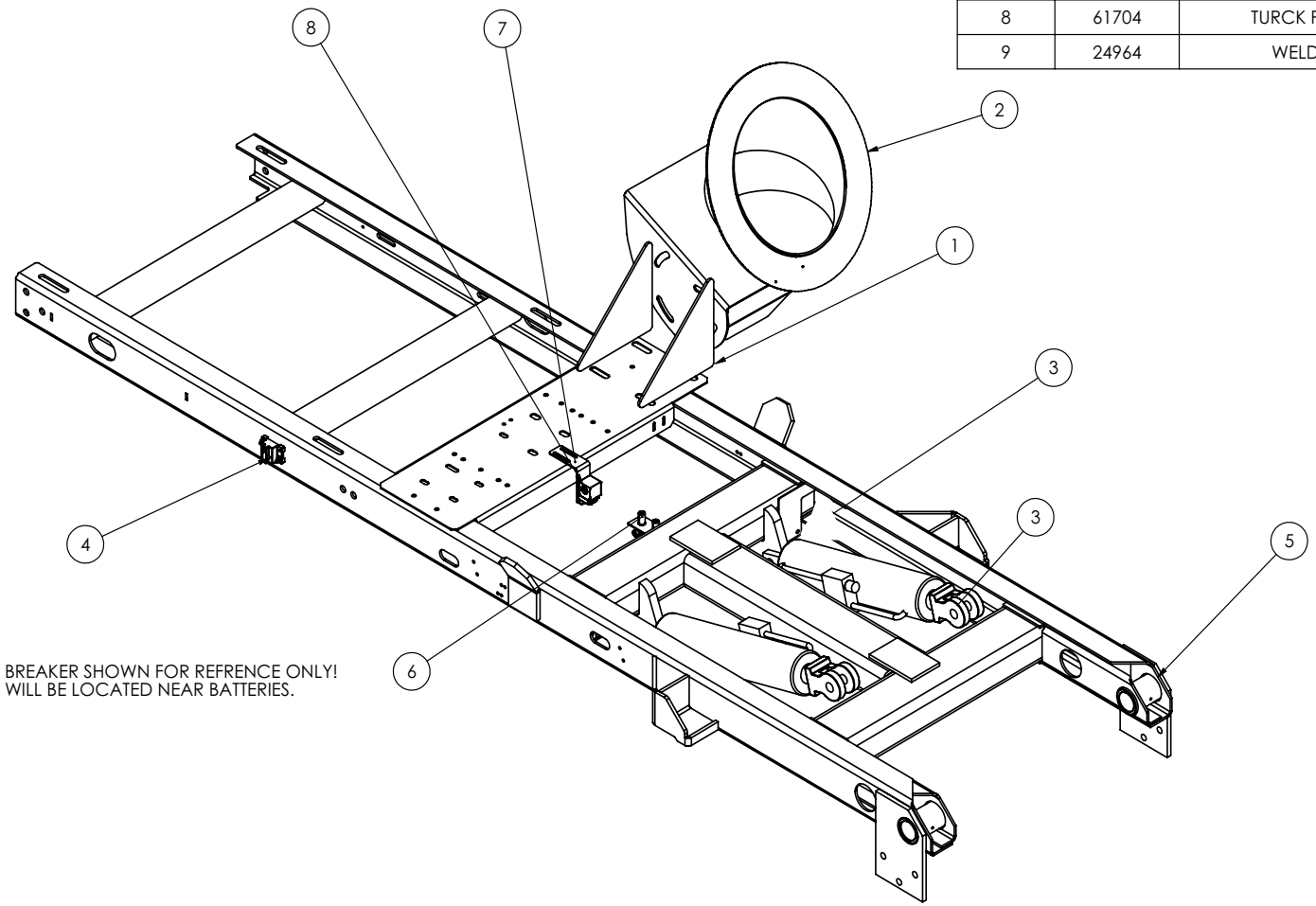

BREAKER SHOWN FOR REFRENCE ONLY!
WILL BE LOCATED NEAR BATTERIES.

203U21 - BARLIGHT REAR

ITEM NO.	PART NUMBER	QTY.	DESCRIPTION
1	5218340	1	BKT,RR,MINI-LED,BR-LITE,A7
2	61523	1	MINI LED BARLIGHT
3	524082	1	GUARD, MINI LED BARLIGHT

ITEMS NOT SHOWN

ITEM NO.	PART NUMBER	QTY.	DESCRIPTION
4	20139	3	CLAMP, .50" RUBBER LINED
5	20529-4	1	TUBING,3/8 NYLON AIR, 10 FEET

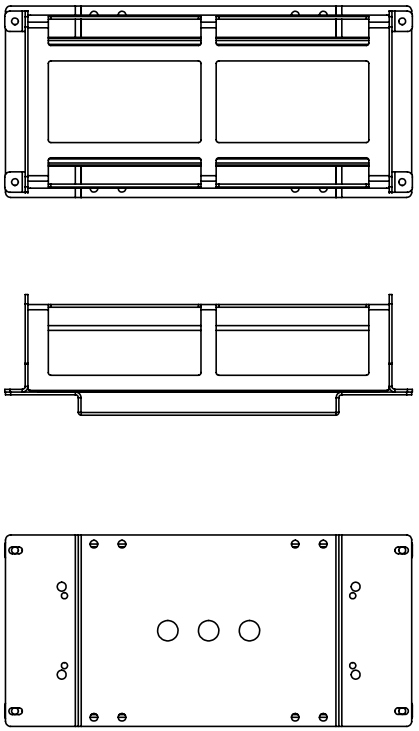

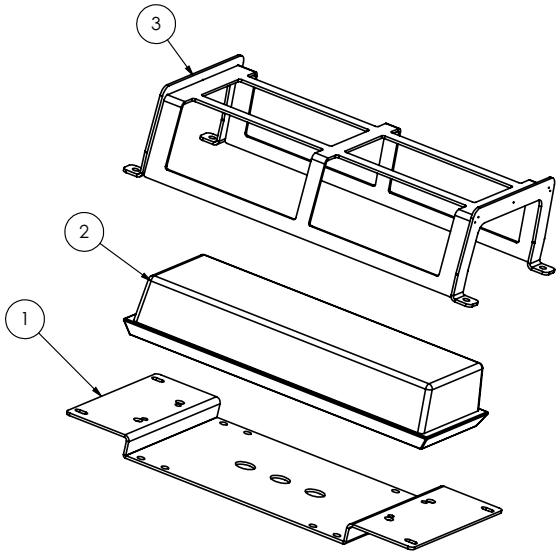

REAR BARLIGHT W/ NO GUARD: 203U22

203Y67 - STROBE, REAR W/GUARD, LED

ITEM NO.	PART NUMBER	Default/QTY.	DESCRIPTION
1	61935	1	BEACON, LED, CLASS 1 AMBER
2	525716	1	LIMB GUARD, BEACON

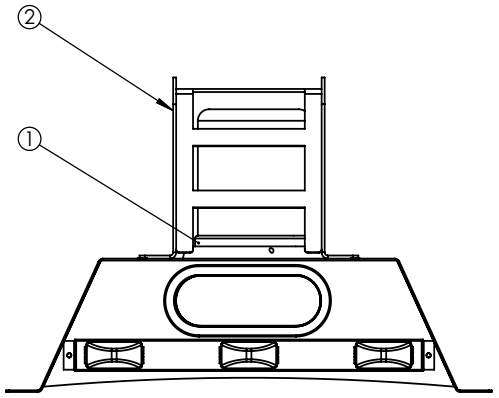

REAR CENTER BRAKE LIGHT ASSEMBLY SHOWN FOR STROBE PLACEMENT

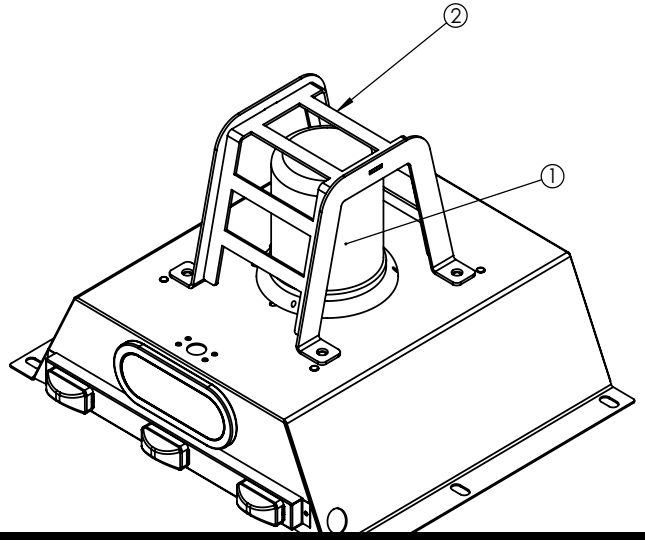

203685 - ARROWBOARD, TRAFIC GUIDE

ITEM NO.	PART NUMBER	QTY.	DESCRIPTION
1	3000713	1	BRACKET, SMALL ARROW BOARD
2	23082	1	ARROW BOARD TRAFFIC GUIDE

ITEMS BELOW NOT SHOWN IN DRAWING

3	23607	1	FUSE HOLDER 14 GA
4	203688	1	CONSOLE KIT, ARROWBOARD
5	23491	1	FUSE, 25 AMP PUSH IN 25 @ BX

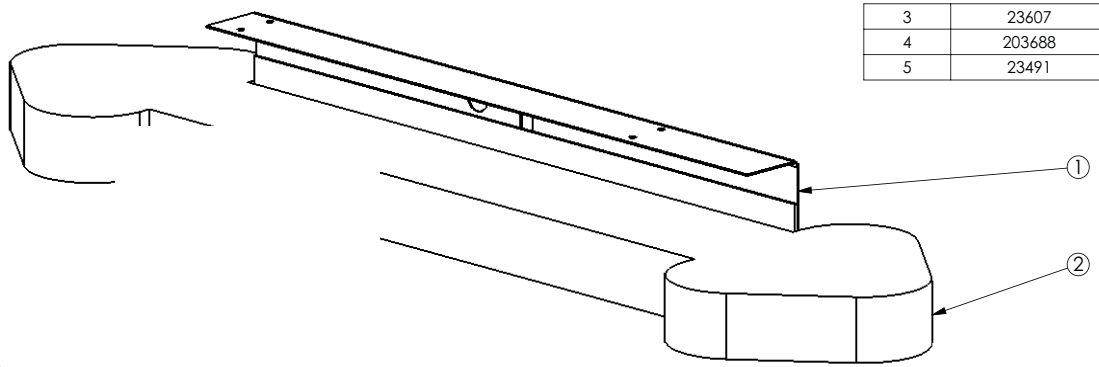

NOTE: ALL LIGHTS HAVE THREE DRAIN HOLES.
MAKE SURE THEY ARE ORIENTED ON THE BOTTOM.

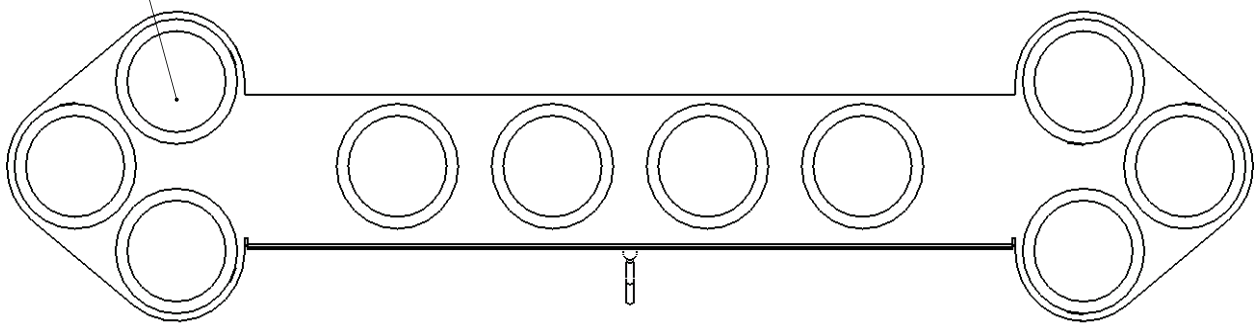

203Y95 - STROBE CAB

ITEM NO.	PART NUMBER	QTY.	DESCRIPTION
1	3000783	1	BEACON BRACKET, CAB MOUNT
2	61935	1	BEACON, LED, CLASS 1 AMBER
3	525716	1	LIMB GUARD, BEACON

ITEMS NOT SHOWN

ITEM NO.	PART NUMBER	QTY.	DESCRIPTION
4	20139	4	CLAMP, .50" RUBBER LINED
5	203429	1	CONSOLE KIT, STROBE/BEACN/BARL
6	21982	2	GROMMET, 5/16" RUBBER

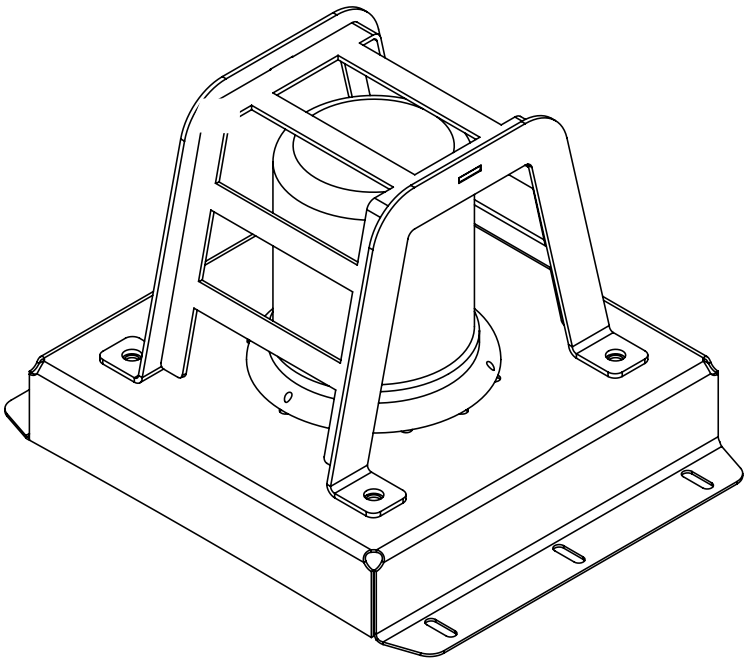

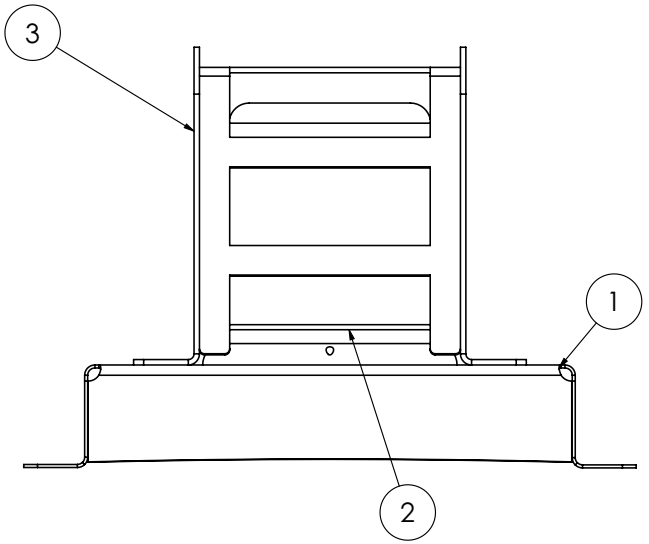

204B51 - STROBE, CONV CAB

ITEM NO.	PART NUMBER	QTY.	DESCRIPTION
1	3000783	1	BEACON BRACKET, CAB MOUNT
2	61935	1	BEACON, LED, CLASS 1 AMBER
3	525716	1	LIMB GUARD, BEACON

ITEMS NOT SHOWN

ITEM NO.	PART NUMBER	QTY.	DESCRIPTION
4	203429	1	CONSOLE KIT, STROBE/BEACN/BARL

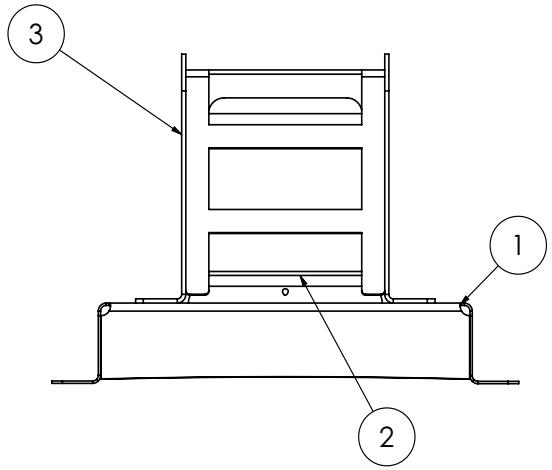

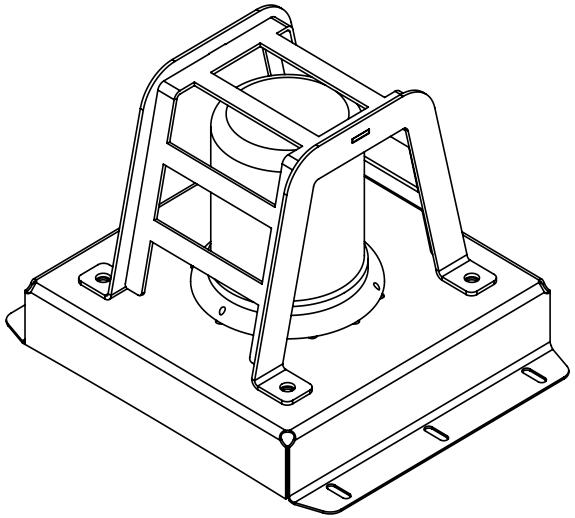

203Z74 - STROBE REAR DUAL

ITEM NO.	PART NUMBER	QTY.	DESCRIPTION
1	5213378	2	BRACKET, DUAL BEACON
2	61935	2	BEACON, LED, CLASS 1 AMBER
3	525716	2	LIMB GUARD, BEACON

ITEM NOT SHOWN

ITEM NO.	PART NUMBER	QTY.	DESCRIPTION
4	203429	1	CONSOLE KIT, STROBE/BEACN/BARL

HOPPER SHOWN FOR DUAL STROBE PLACEMENT

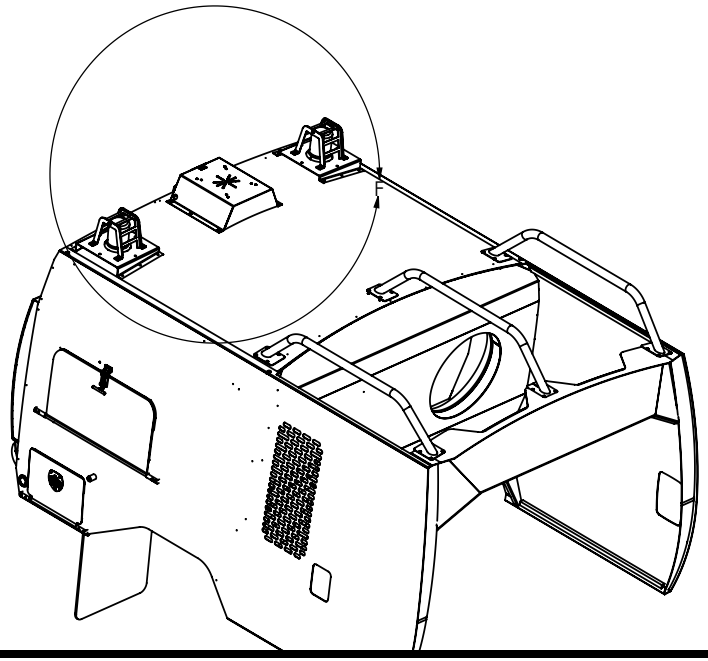

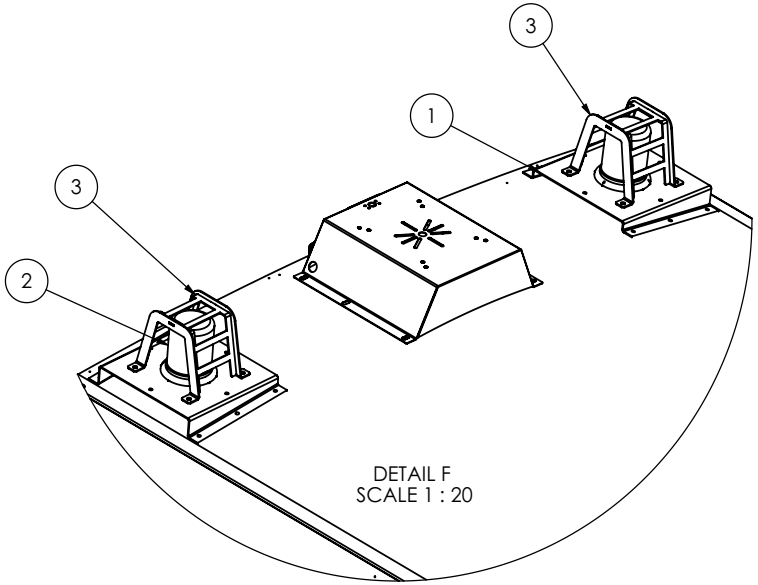

204L46 - STROBE REAR QUAD

ITEM NO.	PART NUMBER	QTY.	DESCRIPTION
1	5213378	4	BRACKET, DUAL BEACON
2	61935	4	BEACON, LED, CLASS 1 AMBER
3	525716	4	LIMB GUARD, BEACON

ITEM NOT SHOWN

ITEM NO.	PART NUMBER	QTY.	DESCRIPTION
4	203429	1	CONSOLE KIT, STROBE/BEACN/BARL

HOPPER SHOWN FOR QUAD STROBE PLACEMENT

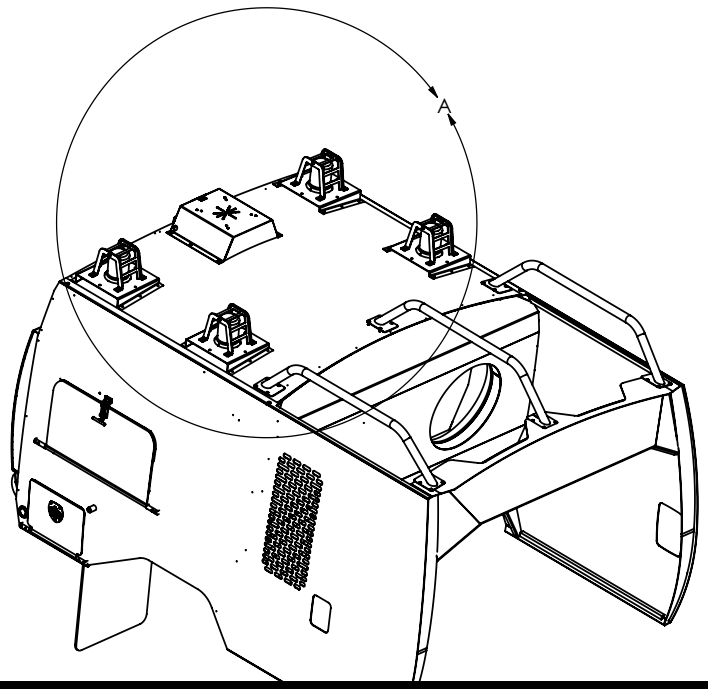

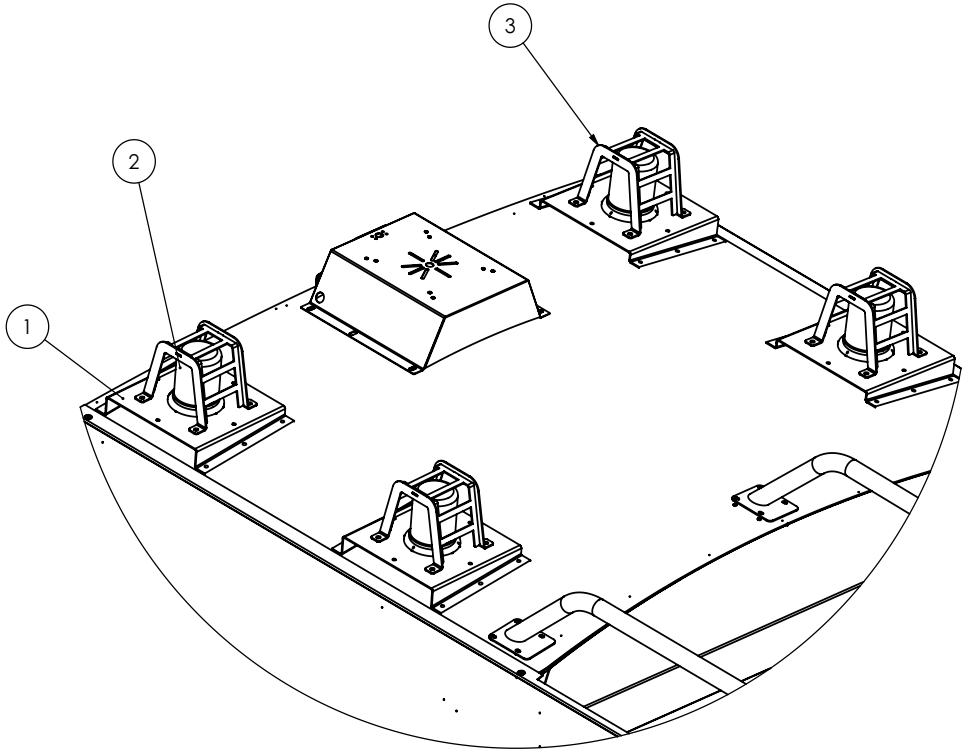

DETAIL A

204C21 - ARROWBOARD, SPLIT 2 PCS

ITEM NO.	PART NUMBER	QTY.	DESCRIPTION
1	5224661	1	BRACKET, SPLIT LIGHT BAR, COV
2	526072	1	COVER, SPLIT LT CONNECTORS
3	29605	1	LED ARROW BOARD TRAFFIC GUIDE

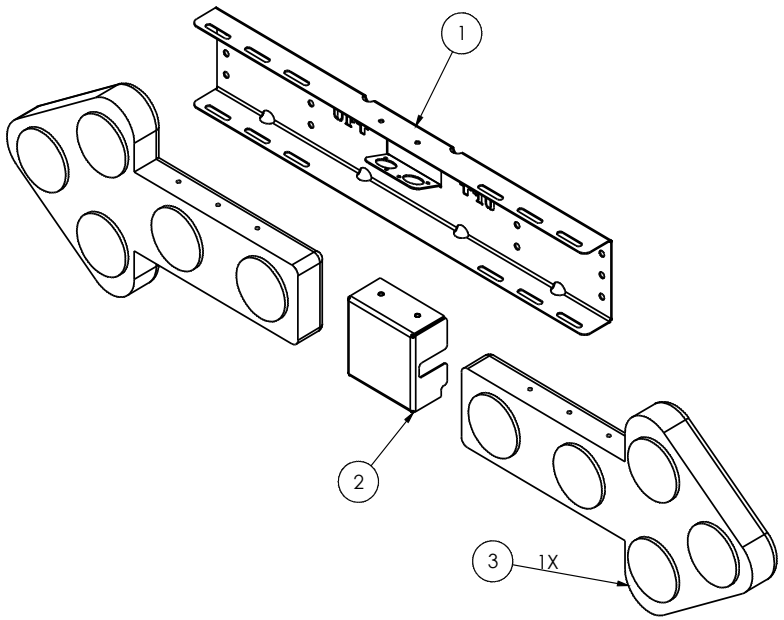

ITEMS NOT SHOWN

ITEM NO.	PART NUMBER	QTY.	DESCRIPTION
4	22945	1	RELAY, SPDT 40A 12VDC CUBE
5	22946	1	CONNECTOR HOUSING,RELAY
6	26024	1	5/8" GROMMET
7	23402	2	GROMMET 1.5" ID X 2.125" OD
8	20155	4	CLAMP, 1.50" RUBBER LINED
9	23491	1	FUSE, 25 AMP PUSH IN 25
10	29607	2	FUSE HOLDER 14 GA

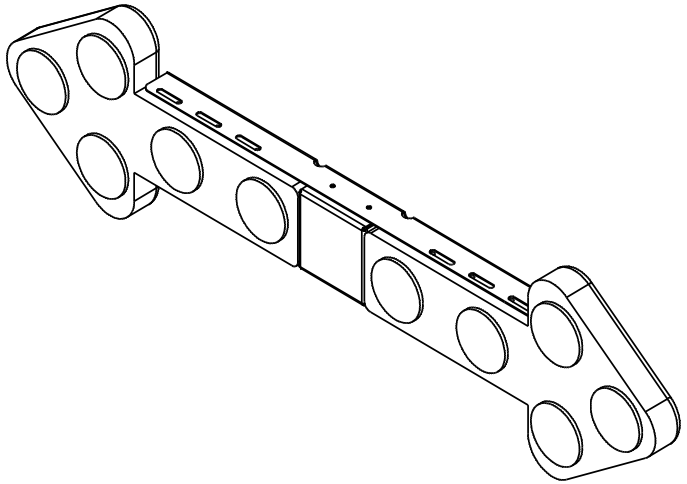

VIEW A

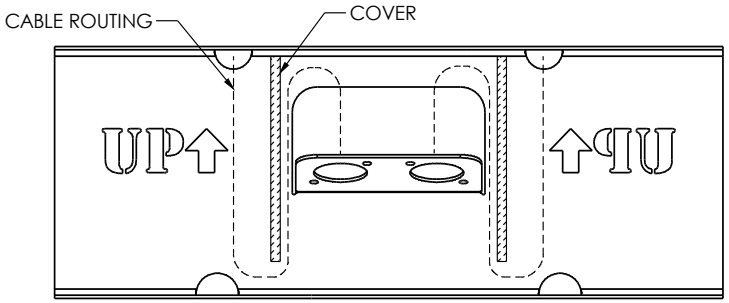

NOTE:
1. CABLE SHALL BE ROUTED BEHIND ARROWBOARD AND COVER AS SHOWN IN VIEW A.
2. ALL LIGHTS HAVE THREE DRAIN HOLES. MAKE SURE THEY ARE ORIENTED ON THE BOTTOM.

204V02 - ARROWSTICK, TAD8

ITEM NO.	PART NUMBER	DESCRIPTION	QTY.
1	67888	TRAFFIC ADVISOR, LED, TAD8	1
2	5224087	BRKT, ARROWSTICK, TAD8	1

ITEMS BELOW NOT SHOWN

ITEM NO.	PART NUMBER	DESCRIPTION	QTY.
3	63651	FUSE HOLDER,30A,12GA, IN LINE	1
4	24076	20A ATC/ATO FUSE	1
5	20311	WIRE, 14 GA - BLACK	26'
6	20313	WIRE, 14 GA - RED	26'
7	20281	FLEXGUARD, 250 - 1/4" X 20'	26'

NOTE: LOCATE BRACKET TO CENTER OF THE DOOR AND MOUNT WITH SELF TAPPING SCREWS. ADJUST LOCATION ACCORDING TO OTHER SELECTED OPTIONS.

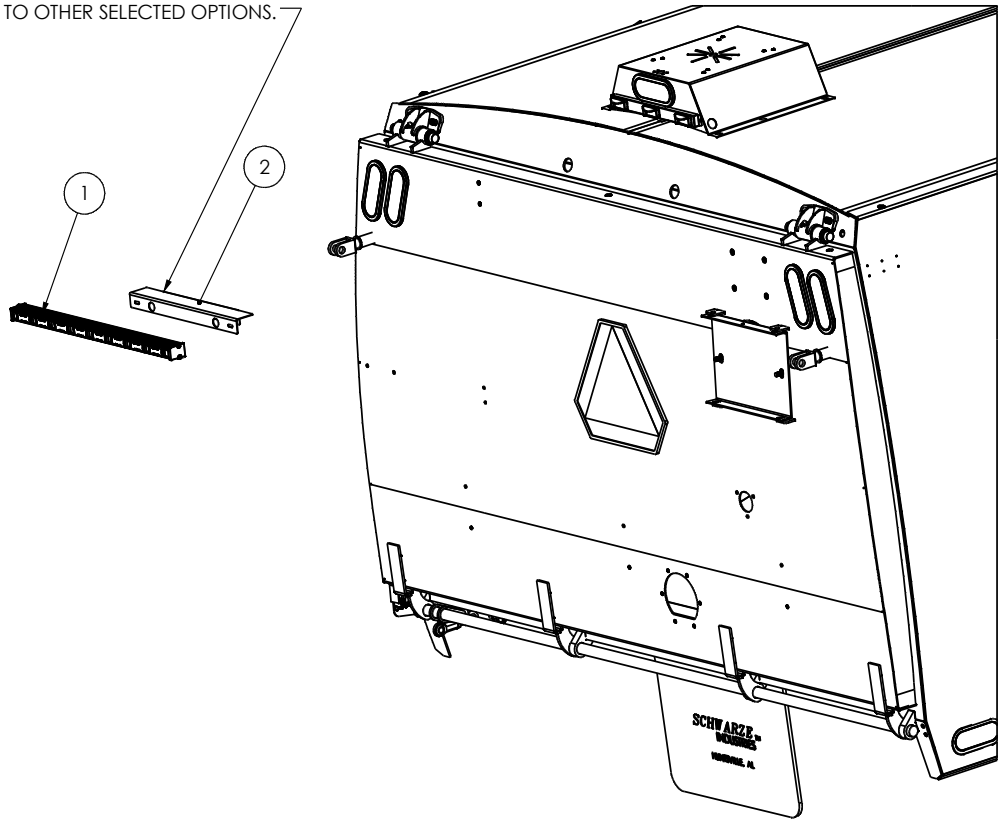

204T22 - BARLIGHT 56” CAB

ITEM NO.	PART NUMBER	QTY.	DESCRIPTION
1	63214	1	BARLIGHT, JUSTICE LED 8 MODULE

ITEMS NOT SHOWN

ITEM NO.	PART NUMBER	QTY.	DESCRIPTION
2	26211	1	CLIP, WIRE .313" - .406"
3	203429	1	CONSOLE KIT, STROBE/BEACN/BARL
4	20529-4	1	TUBING,3/8 NYLON AIR, 10 FEET
5	20149	3	CLAMP, 3/8" NYLON

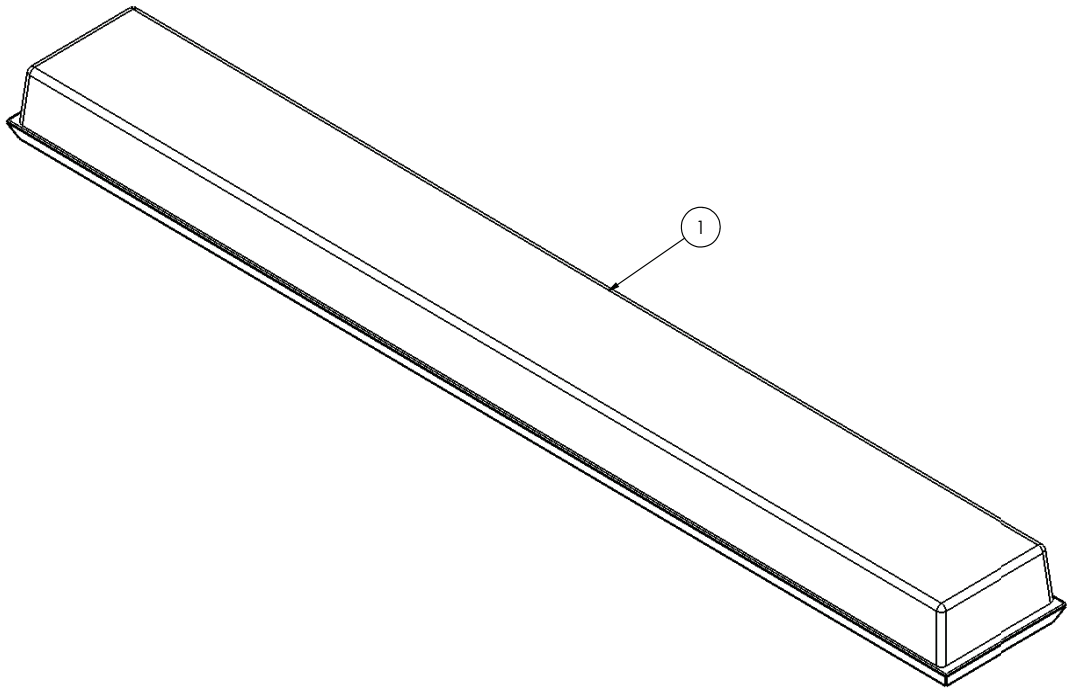

204B10 - MINI BARLIGHT

ITEM NO.	PART NUMBER	Default/QTY.	DESCRIPTION
1	5218155	1	BRACKET, MINI LED BARLIGHT
2	61523	1	MINI LED BARLIGHT
3	524082	1	GUARD, MINI LED BARLIGHT

ITEMS NOT SHOWN

ITEM NO.	PART NUMBER	Default/QTY.	DESCRIPTION
4	20139	3	CLAMP, .50" RUBBER LINED
5	20529-4	1	TUBING,3/8 NYLON AIR, 10 FEET
6	203429	1	CONSOLE, STROBE/BEACN/BARLIGHT

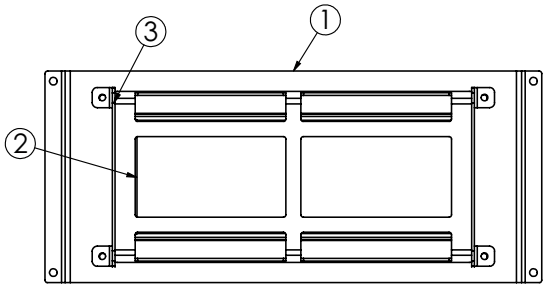

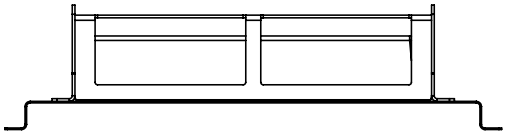

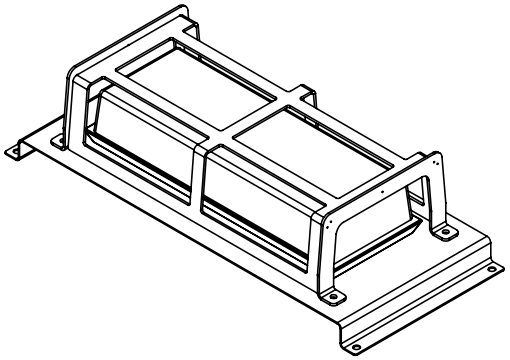

204L11 - STANDARD WATER

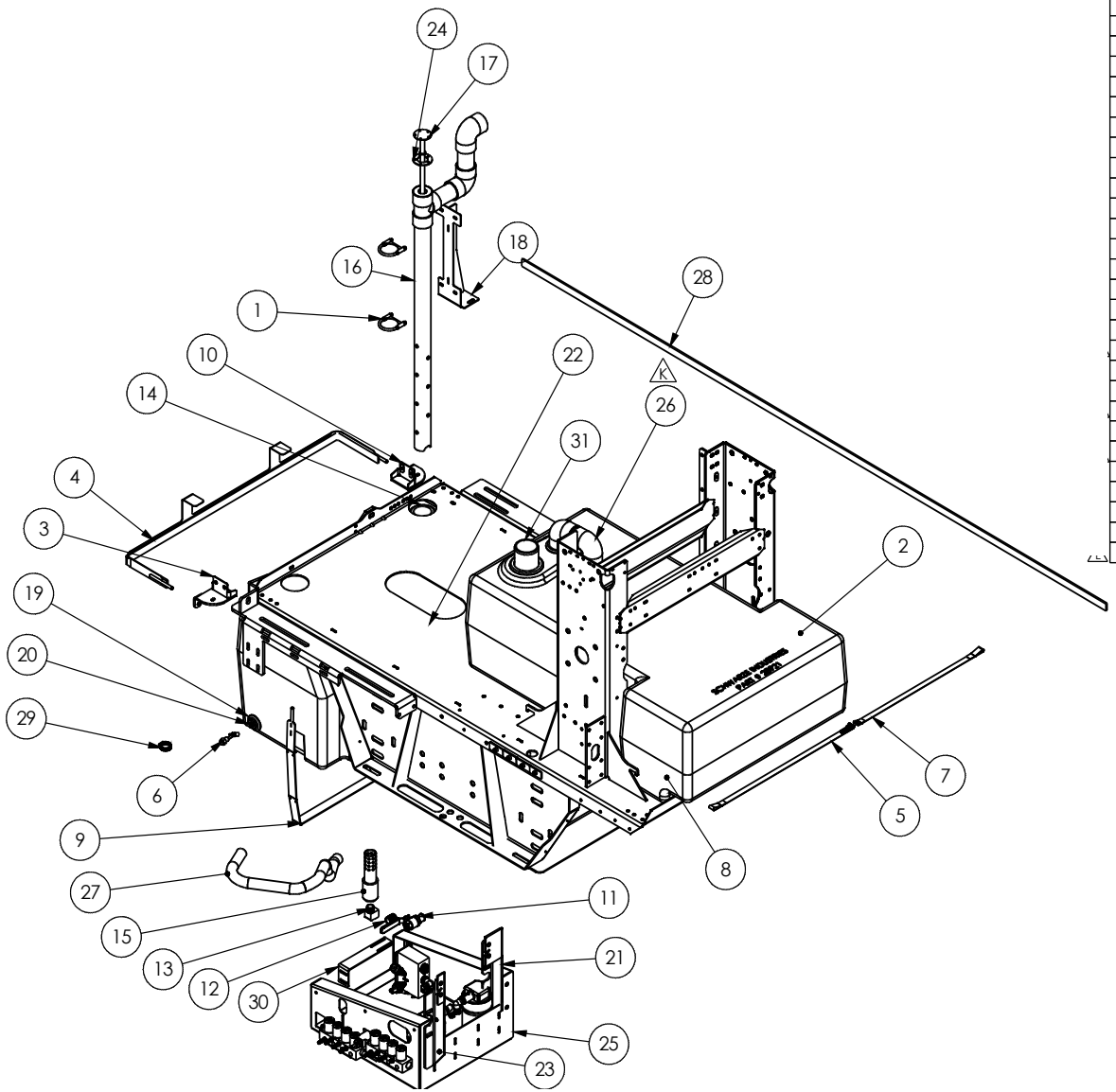

ITEM NO.	PART NUMBER	DESCRIPTION	QTY.
1	20831	CLAMP,2 1/2" MUFFLER U-BOLT	2
2	522948	STANDARD WATER TANK ASSY	1
3	523057	BRACKET WELD'T, STRAP 150-GAL WATER TANK, FRONT	1
4	203E37	STRAP ASSY 150 GAL WATER TANK	1
5	55036	STRAP, WATER TANK 100 GALLON	1
6	22641	SWITCH,LIQUID LEVEL	1
7	55037	STRAP, WATER TANK 100 GALLON	1
8	5213945	TRAY, 150 GAL WATER TANK	1
9	522853	STRAP, HANGER, 150 GAL W/T	1
10	523058	BRACKET WELD'T, STRAP 150 GAL WATER TANK, REAR	1
11	29235	VALVE, BALL 3/4" WITH 1" BARB	1
12	26850	NIPPLE, CLOSE 3/4" BRASS	1
13	20974	ELBOW 3/4" NPT 90 DEGREES	1
14	22974	GROMMET, 2" UNISEAL	4
15	524800	STRAINER DRAIN ASSY, 1-1/4"	1
16	525019	VENT, SENSOR ASSEMBLY	1
17	61639	SENDER, ANALOG	1
18	525027	MOUNT, SENDER BRACE	1
19	22973	GROMMET,1" UNISEAL PIPE	1
20	55020	BUSHING, 1" X 1/2 NPT PVC	1
21	5214325	REAR WATER PUMP BOX BKT	1
22	5221631	NYLON BUSHING, WATER LEVEL GA	1
23	5214252	WATER PUMP BOX BKT	1
24	65317	GASKET, FOR SENDER	1
25	204N35	TRAY, DUAL WP A7T & A9T	1
26	522393	VENT TUBE ASSY WATER TANK	1
27	27349-36	1" PVC SUCTION HOSE	1
28	21428-120	1/4" X 1.25 SEAL MATL, 10 FT.	1
29	25182	CLAMP, HOSE 1-1/2 SIZE 16	1
30	5221669	TANK DRAIN SUPPORT BKT	1
31	5214281	FILL TUBE	1

524800 - STRAINER 1-1/4”

ITEM NO.	PART NUMBER	QTY.	DESCRIPTION
1	5220714	1	STRAINER PIPE, PVC, 1-1/4"
2	65248	1	COUPLING, 1-1/4" SCH 80, PVC
3	25172	1	1 1/4 X 3/4 PVC BUSHING

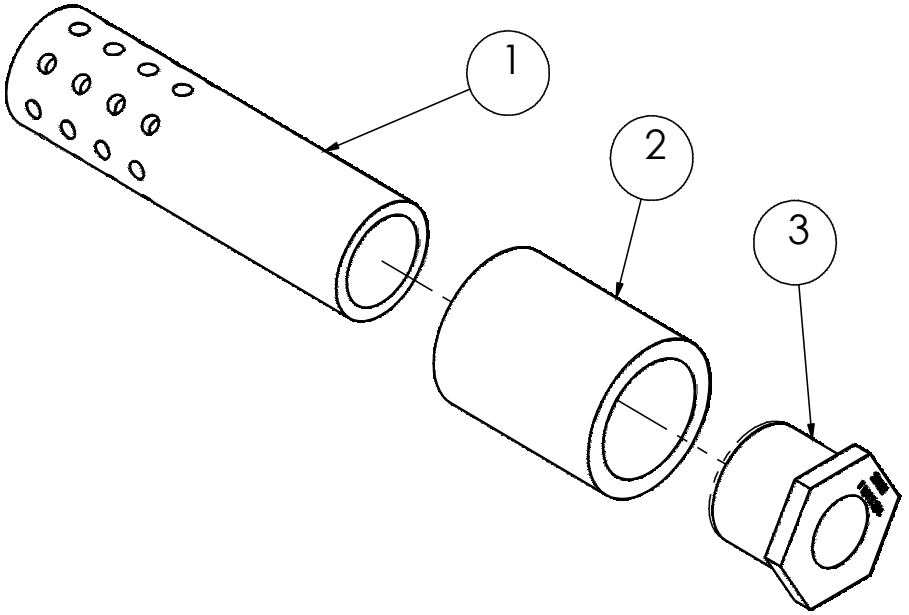

525019 - VENT SENSOR

ITEM NO.	QTY.	PART NUMBER	DESCRIPTION
1	1	29167	TEE, 2" SCH 80 PVC
2	2	5219185	TUBE, SHORT, VENT, 6"
3	2	23922	ELBOW 90° 2" SCH 80
4	1	5221396	TUBE, SENSOR TROUGH
5	1	29246	BUSHING, 2.0 SLIP X 3/4 NPT

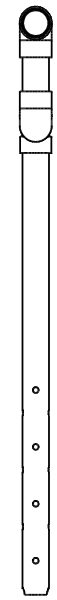

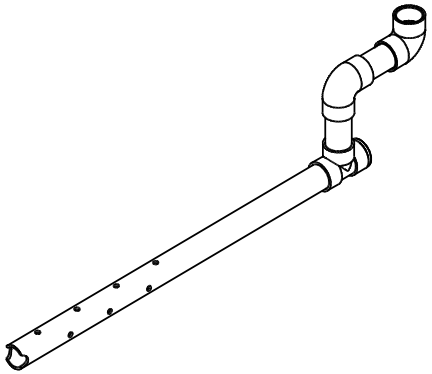

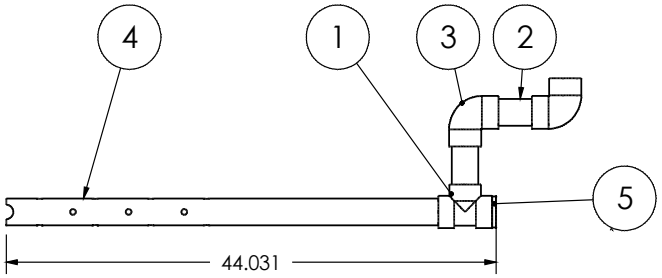

204N35 - TRAY, DUAL WP

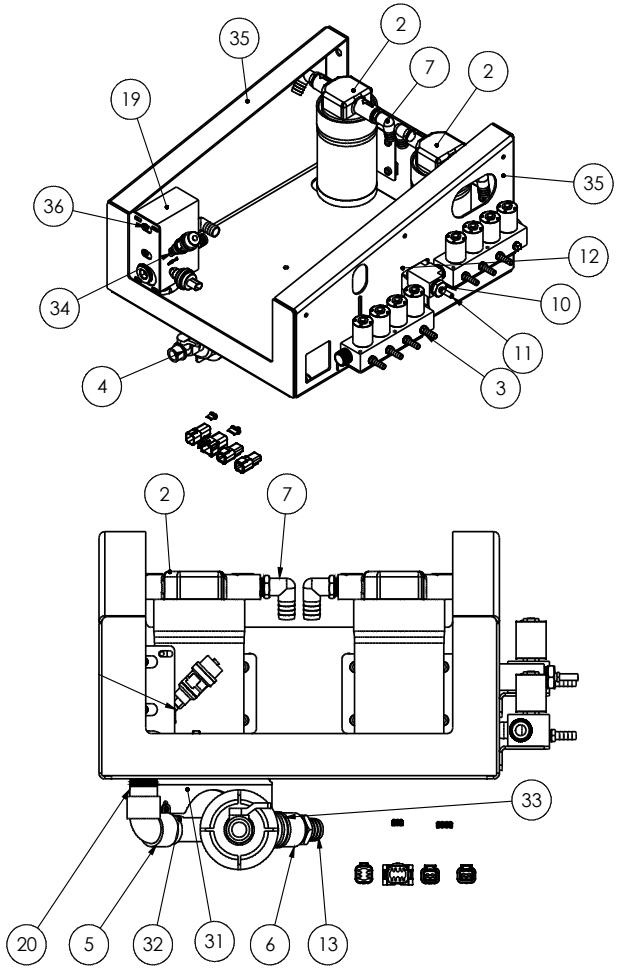

ITEM NO.	PART NUMBER	QTY.	DESCRIPTION
1	5221346	2	MOUNT, MANIFOLD, 4 PORT
2	66029	2	5 STAGE DIAPHRAM PUMP
3	60851	2	4 STAGE MANIFOLD ASSY
4	66083	1	FILTER HOUSING/W SCREEN 1" WATER
5	23682	1	ELBOW 1" PVC
6	55015	1	COUPLING 1" PVC
7	65924	4	ELBOW, 90° 1/2 NPT TO 3/4 HB
8	26850	2	NIPPLE, CLOSE 3/4" BRASS
9	26855	1	TEE, 3/4" NPT UNION BRASS
10	26995	1	BUSHING, 3/4 NPT 1/8 NPT
11	23676	1	VALVE, BRASS AIR TANK
12	26932	1	HOSE BARB, 3/4" NPT TO 3/4"
13	55016	1	HOSE BARB 1" NPT X 1"
14	26852	1	PLUG, 1/4" BRASS
15	26930	7	1/4" MNPT X 3/8" PUSH-LOK
16	66073	1	FILTERMINDER 6 IN HG
17	66081	1	SWITCH N.O. 6"HG FILTERMINDER
18	29453	1	PLUG,3/4 NPT HEX BRASS
19	66166	1	MANIFOLD, WATER SYSTEM
20	66283	1	NIPPLE, 1 X 2.5 PVC
21	66280	2	PLUG, 1 NPT HOLLOW HEX
22	66282	1	HOSE BARB, 3/4 NPT X 3/4 HB
23	66288	2	ELBOW, 90° 3/4 NPT TO 3/4 HB
24	5222462	1	MOUNT, WP MANIFOLD
** 25	64597	1	CONN, DT SERIES, 6 WAY RECPT
** 26	64598	1	CONNECTOR, 8WAY RECEPTACLE, RW
** 27	64614	1	TPA, RECPT, DT, 6-POS
** 28	64616	1	WEDGELOCK, DT, 8POS RECPT
** 29	54678	45	HOSE, 3/4" FLEX
** 30	25182	8	CLAMP, HOSE 1-1/2 SIZE 16
31	5222689	1	MOUNT, Y-STRAINER, BOLT ON
32	20140	1	CLAMP, 1.0" RUBBER LINED
33	20155	1	CLAMP, 1.50" RUBBER LINED
34	20948	1	ELBOW, 45° 1/8 BRASS STREET
35	5221704	1	TRAY, WATER A7 & A9 DUAL PUMP
36	66281	3	PLUG, 1/8 NPT HOLLOW HEX
37	64606	2	PLUG, 2 CONTACT, SIZE 12 DTM

** ITEMS NOT SHOWN IN DRAWING

204N35 - TRAY, DUAL WP

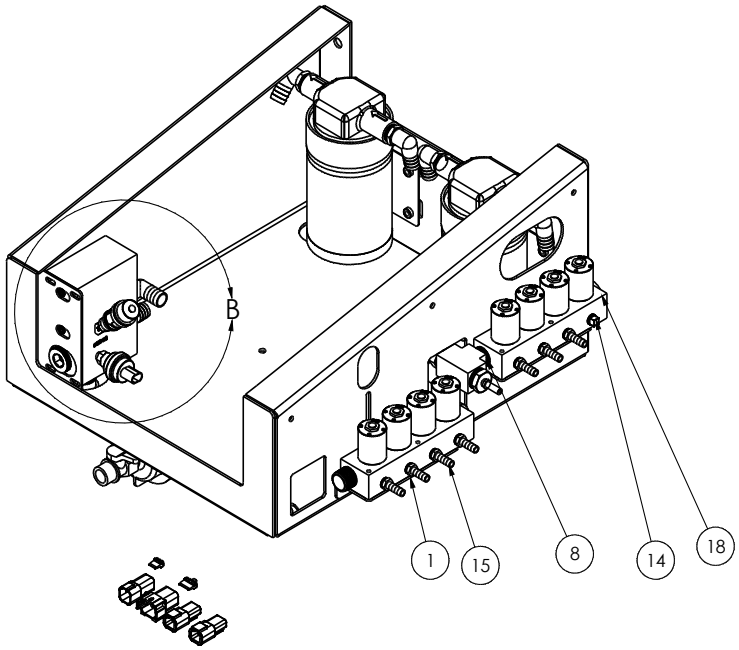

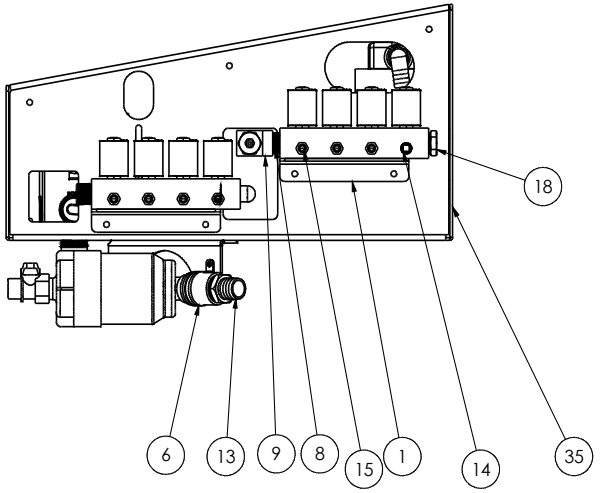

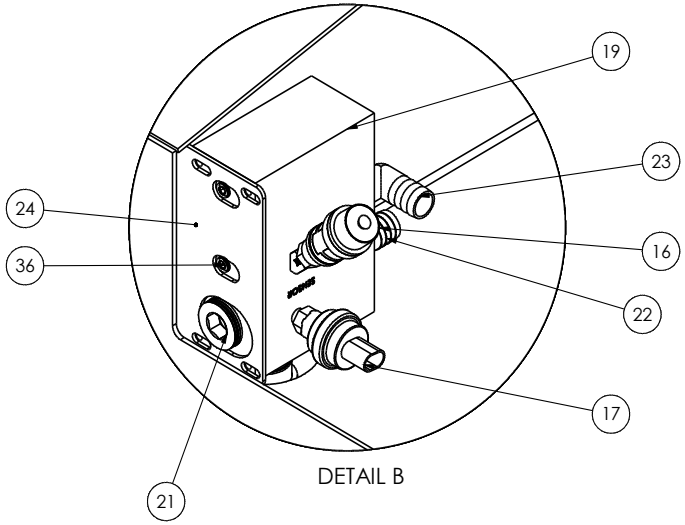

204N35 - TRAY, DUAL WP

NOTE: TERMINATE COMPONENT WIRE LEADS INTO CONNECTORS AS SPECIFIED IN WIRE CHARTS BELOW.

WATER TRAY		
DEUTSCH DT04-08P		
CAV	COLOR	CIRCUIT
1	BLACK	LGB SPRAYBAR
2	BLACK	HEAD WATER
3	BLACK	FRONT SPRAYBAR
4	BLACK	HOPPER SPRAYBAR
5	BLACK	GROUND HOPPER SPRAYBAR
6	BLACK	GROUND FRONT SPRAYBAR
7	BLACK	GROUND HEAD WATER
8	BLACK	GROUND LGB SPRAYBAR

WATER TRAY		
DEUTSCH DT04-6P		
CAV	COLOR	CIRCUIT
1	BLACK	RGB SPRAYBAR
2	BLACK	HOPPER WATER
3	BLACK	INTAKE WATER
4	BLACK	GROUND INTAKE WATER
5	BLACK	GROUND HOPPER WATER
6	BLACK	GROUND RGB SPRAYBAR

WATER PUMP #1		
DEUTSCH DTP04-2P		
CAV	COLOR	CIRCUIT
1	RED	POSITIVE
2	BLACK	GROUND

WATER PUMP #2		
DEUTSCH DTP04-2P		
CAV	COLOR	CIRCUIT
1	RED	POSITIVE
2	BLACK	GROUND

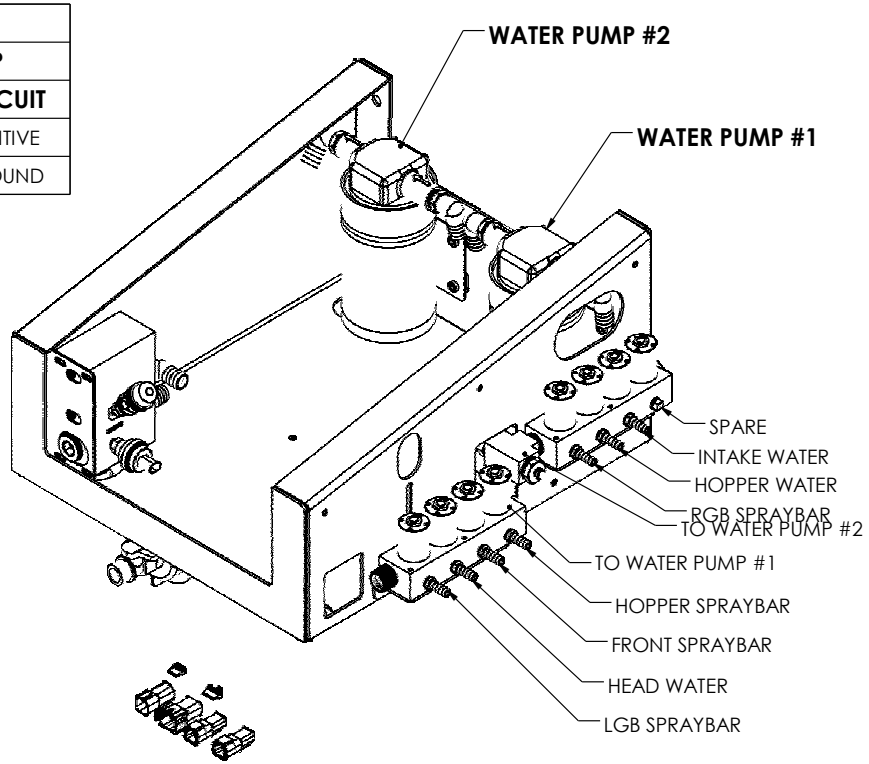

60851 - 4-STAGE MANIFOLD

ITEM NO.	PART NUMBER	QTY.	DESCRIPTION
1	61136	1	MANIFOLD, 4 STAGE
2	54445	4	VALVE, PETER PAUL

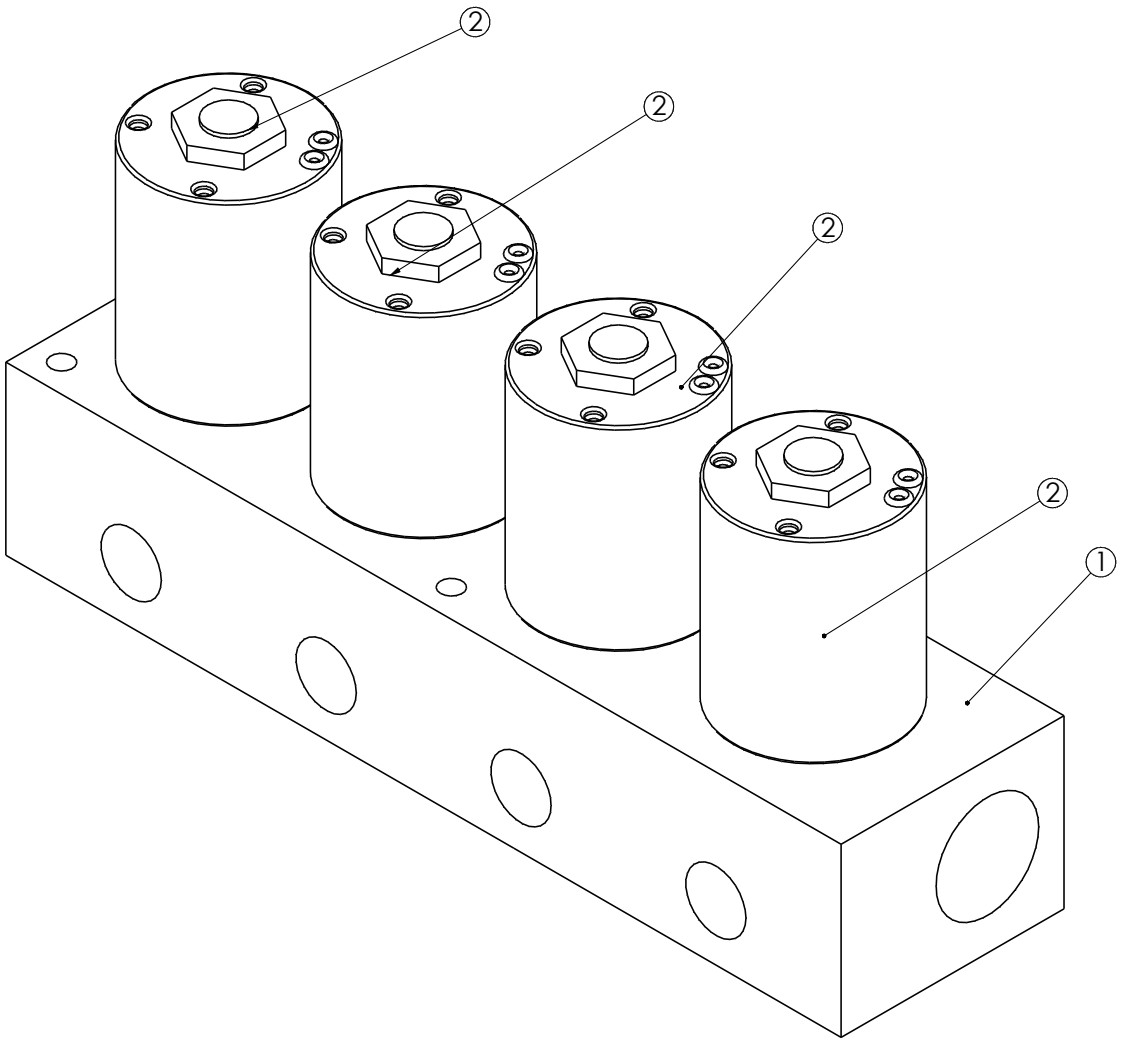

522393 - WATER VENT

ITEM NO.	PART NUMBER	QTY.	DESCRIPTION
1	5211976	1	CONNECTOR TUBE BREATHER
2	5211977	1	CONNECTOR BREATHER\FILL PIPE
3	23922	2	ELBOW 90° 2" SCH 80

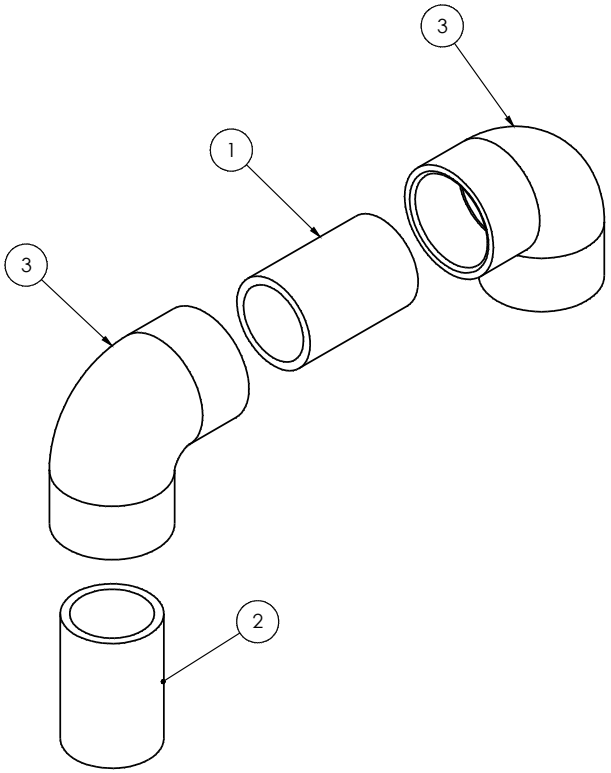

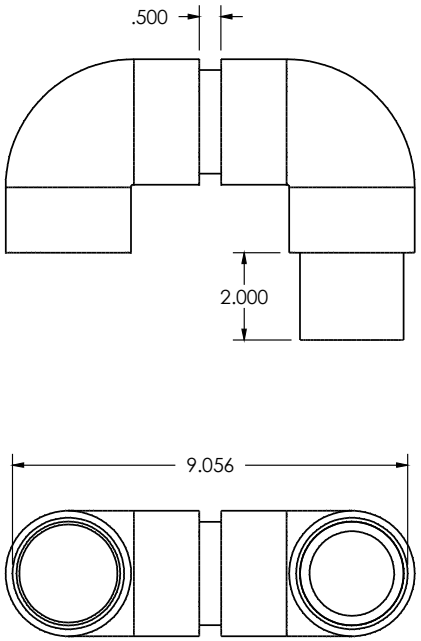

204W62 - TANK, WATER 356 GAL, M22 T4F

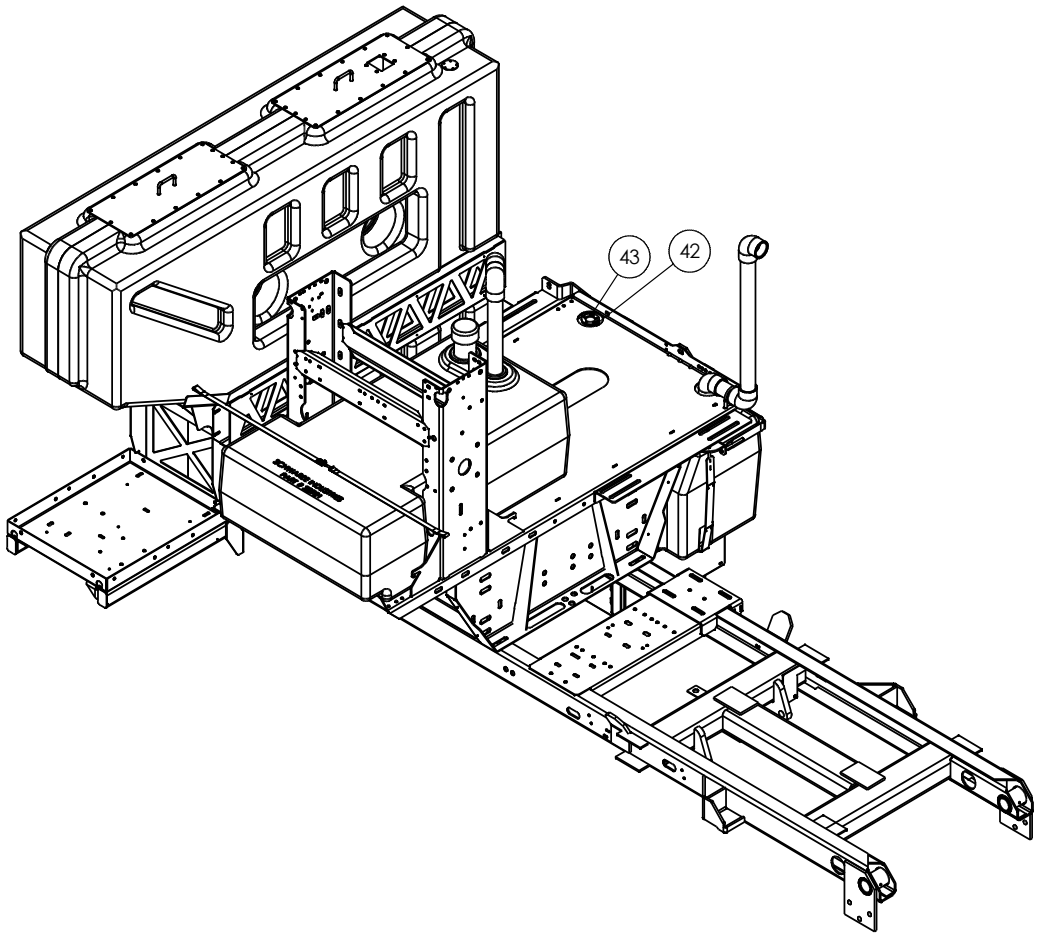

	ITEM NO.	PART NUMBER	QTY.	DESCRIPTION
	1	204V90	1	ASSY. 356G WATER TANK, STNDRD
	2	5213945	1	TRAY, 150 GAL WATER TANK
	3	523057	1	BRACKET WELD'T, STRAP 150-GAL WATER TANK, FRONT
	4	203E37	1	STRAP ASSY 150 GAL WATER TANK
	5	55036	1	STRAP, WATER TANK 100 GALLON
	6	522853	1	STRAP, HANGER, 150 GAL W/T
	7	523058	1	BRACKET WELD'T, STRAP 150 GAL WATER TANK, REAR
	8	524800	1	STRAINER DRAIN ASSY, 1-1/4"
	9	29235	1	VALVE, BALL 3/4" WITH 1" BARB
	10	26850	2	NIPPLE, CLOSE 3/4" BRASS
	11	22973	1	GROMMET,1" UNISEAL PIPE
	12	55020	1	BUSHING, 1" X 1/2 NPT PVC
	13	5214252	1	WATER PUMP BOX BKT
	14	5214325	1	REAR WATER PUMP BOX BKT
	15	22641	1	SWITCH,LIQUID LEVEL
	16	55037	1	STRAP, WATER TANK 100 GALLON
	17	65889	1	SENSOR, 3 WIRE WATER LEVEL 35
	18	26855	1	TEE, 3/4" NPT UNION BRASS
	19	5221669	1	TANK DRAIN SUPPORT BKT
	20	26932	2	HOSE BARB, 3/4" NPT TO 3/4"
	21	5219184	1	TUBE, LONG, VENT, 16"
	22	22974	6	GROMMET, 2" UNISEAL
*	23	27349-36	1	1" PVC SUCTION HOSE
*	24	27349-96	1	SUCTION HOSE, 1"
*	25	25182	4	CLAMP, HOSE 1-1/2 SIZE 16
*	26	21428-120	1	1/4" X 1.25 SEAL MATL, 10 FT.
*	27	26633-96	1	3/4 PUSH LOK WTR HOSE BLUE, 8F
	28	28922	1	TANK, WATER, 150 GALLON
	29	522946	1	LOWER DRAIN DOUBLE WATER TNK
	30	28921	1	TANK, WATER 100 GALLON
	31	23827	1	GROMMET 3"
	32	23829	1	GROMMET, 1.25" UNISEAL PIPE
*	33	25172	1	1 1/4 X 3/4 PVC BUSHING
	34	203H33	1	WATER TANK VENT, A7 (350 GAL)
*	35	55021	1	BUSHING, 2 X 1/2 PVC 80 HEX
	36	650429	1	WATER, DISCHARGE PIPE
	37	20974	1	ELBOW 3/4" NPT 90 DEGREES
	38	20831	1	CLAMP,2 1/2" MUFFLER U-BOLT
	39	525121	1	VENT, DUAL WATER TANK, REAR
	40	32282	1	U-BOLT, 1/4-20 X 1-1/8
	41	204N35	1	TRAY, DUAL WP A7T & A9T
	42	5223828	1	SEAL,FLOAT LEVEL PLATE
	43	65317	1	GASKET, FOR SENDER
	44	526094	1	FILL TUBE AND CAP WELDMENT

* ITEMS NOT SHOWN

204W62 - TANK, WATER 356 GAL, M22 T4F

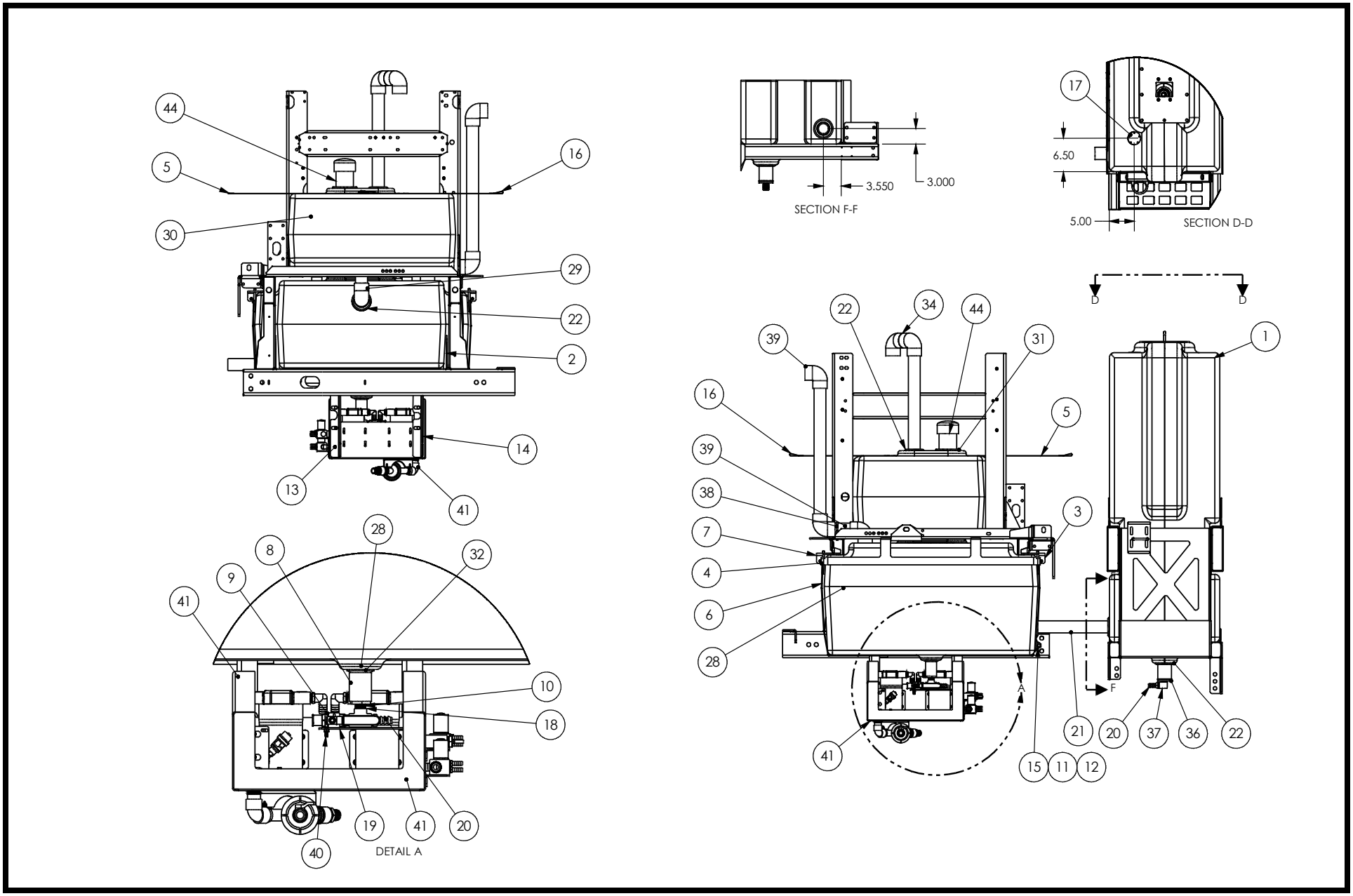

203H33 - WATER TANK VENT

ITEM	Default/QTY.	PART NO.	DESCRIPTION
1	1	5215237	TUBE 22", BREATHER, WATER TNK
2	2	23922	ELBOW 90° 2" SCH 80
3	1	5213940	WATER FILL , NIPPLE,2" X 3"

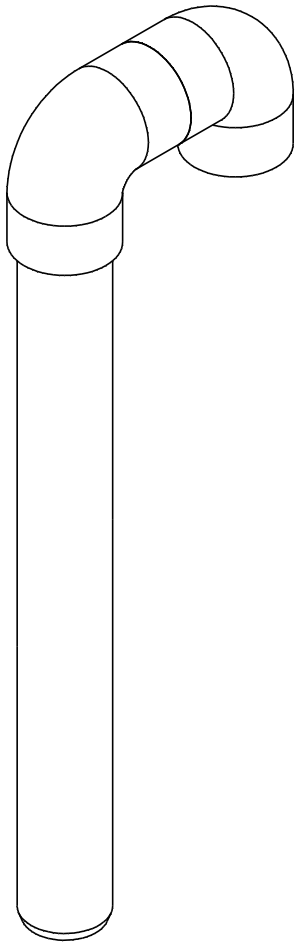

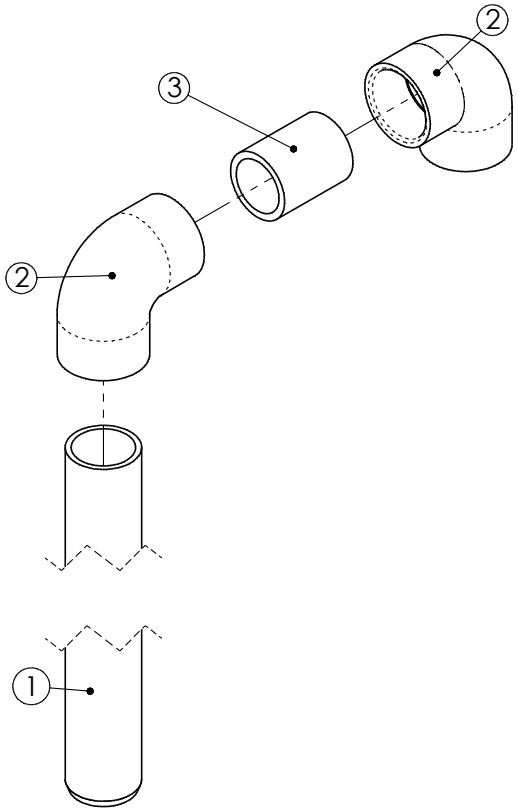

204V90 - 356G TANK WITH Y-STRAINER FILL

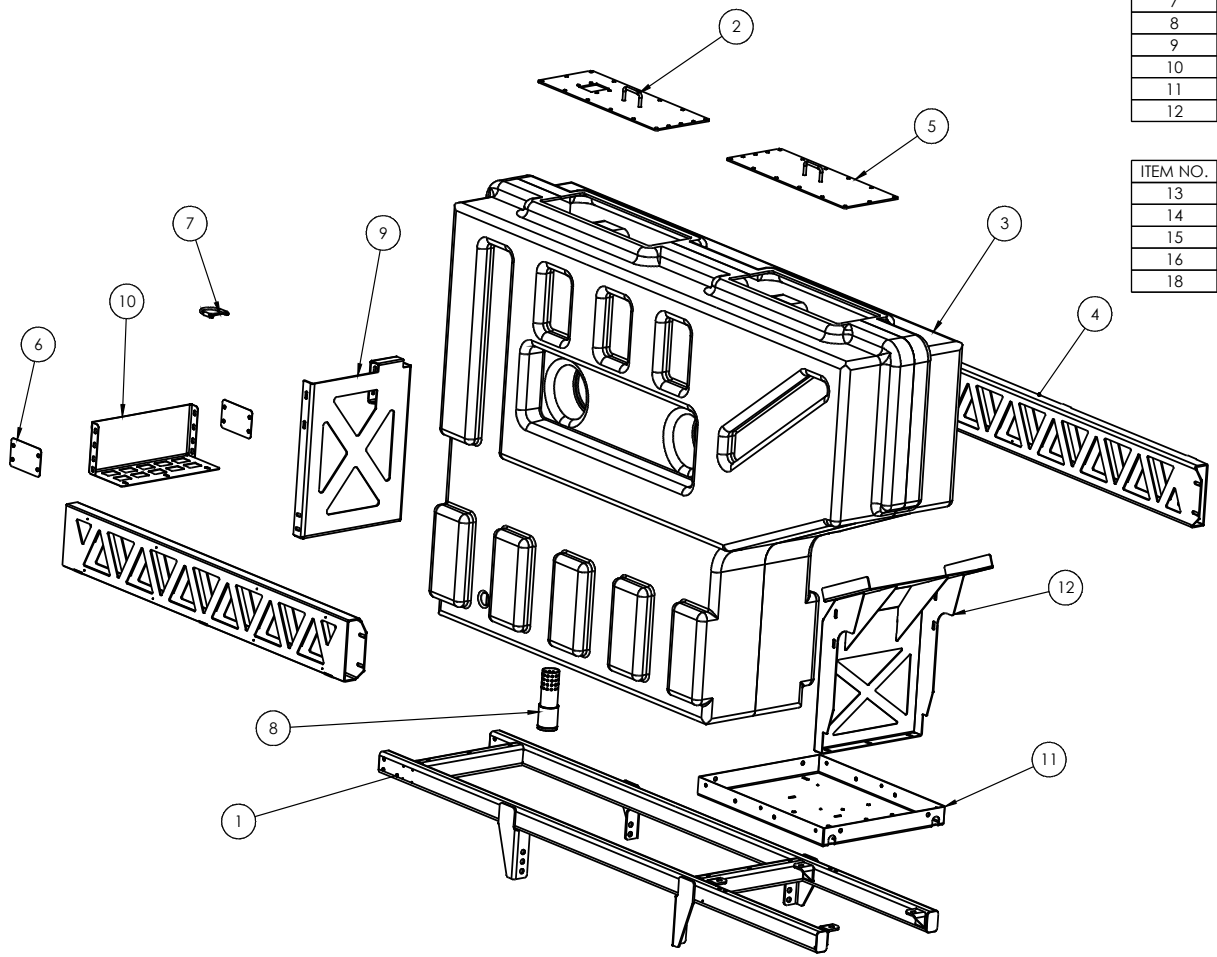

ITEM NO.	PART NUMBER	DESCRIPTION	QTY.
1	524790	FRAME,WATER RES, 350G, M2	1
2	650419	COVER,WATER RESERVOIR AIR GAP	1
3	68035	TANK,WATER 356 GALLONS	1
4	5224235	CHANNEL,WATER RES MOUNT SIDE	2
5	650418	COVER,WATER RESERVOIR CLEANOUT	1
6	6501568	PLATE,WATER RES,FILL HOSE	2
7	20831	CLAMP,2 1/2" MUFFLER U-BOLT	1
8	650429	WATER, DISCHARGE PIPE	1
9	5224332	PLATE,WATER RES MOUNT FUEL EN	1
10	6501991	PLATE,WATER RES,FILL HOSE SHEL	1
11	5219645	MISC TRAY, 350 WATER RES FRAME	1
12	525928	WLD, 350G TANK SUPPORT	1

ITEMS NOT SHOWN

ITEM NO.	PART NUMBER	DESCRIPTION	QTY.
13	25182	CLAMP, HOSE 1-1/2 SIZE 16	1
14	54678	HOSE, 3/4" FLEX	12 in.
15	20974	ELBOW 3/4" NPT 90 DEGREES	1
16	26932	HOSE BARB, 3/4" NPT TO 3/4"	1
18	25366	3/4" MALE BRANCH TEE, BRASS NPT	1

204V90 - ASSY, 356G TNK W/Y STRNER FILL

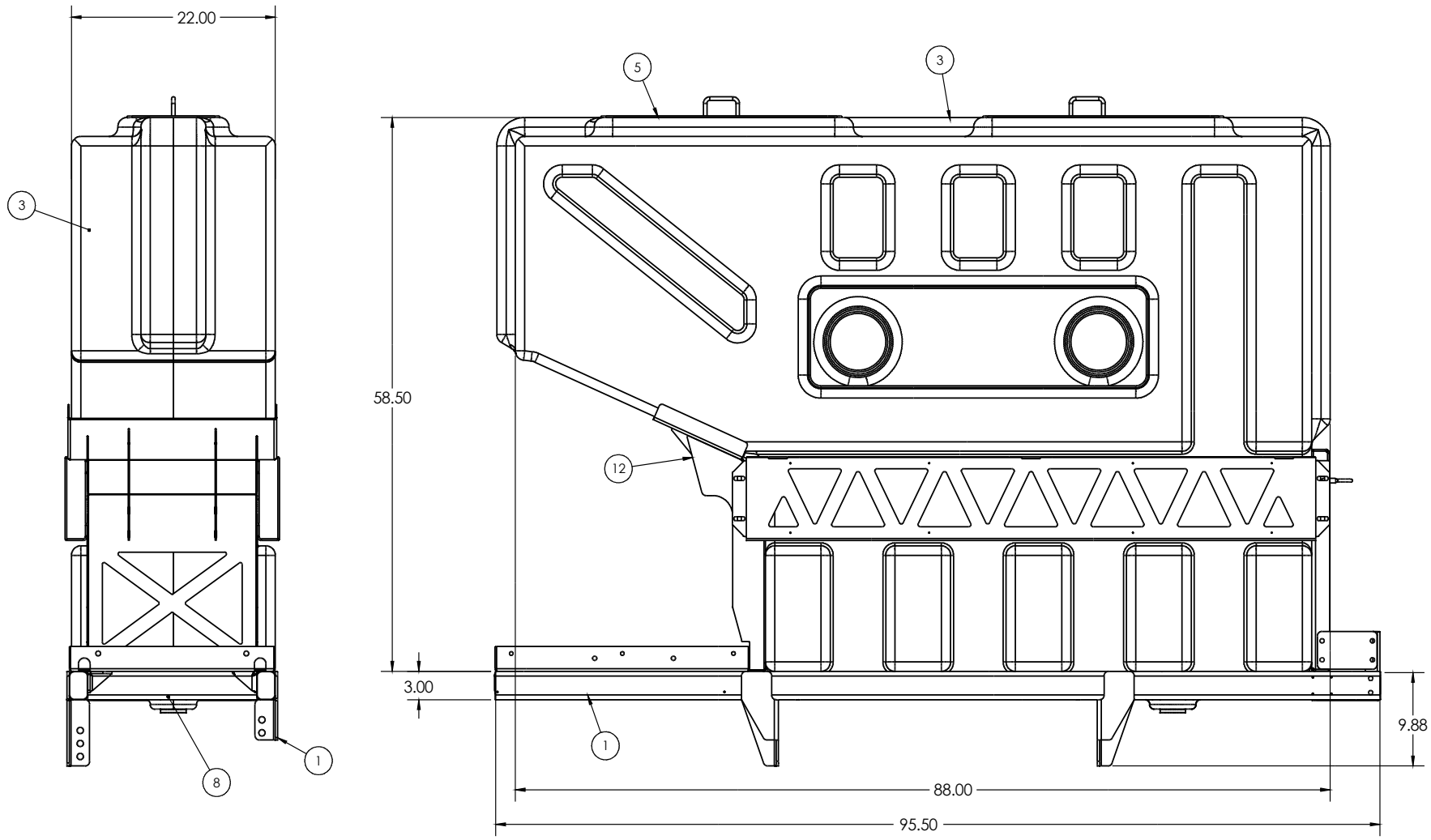

650550 - WATER TANK AIR GAP

ITEM NO.	QTY.	PART NUMBER	DESCRIPTION
1	1	6500776	MOUNT, AIR GAP
2	1	22228	BUSHING 2 X 1-1/2 BLK
3	1	22229	1.50" PIPE NIPPLE, CLOSE, IRON

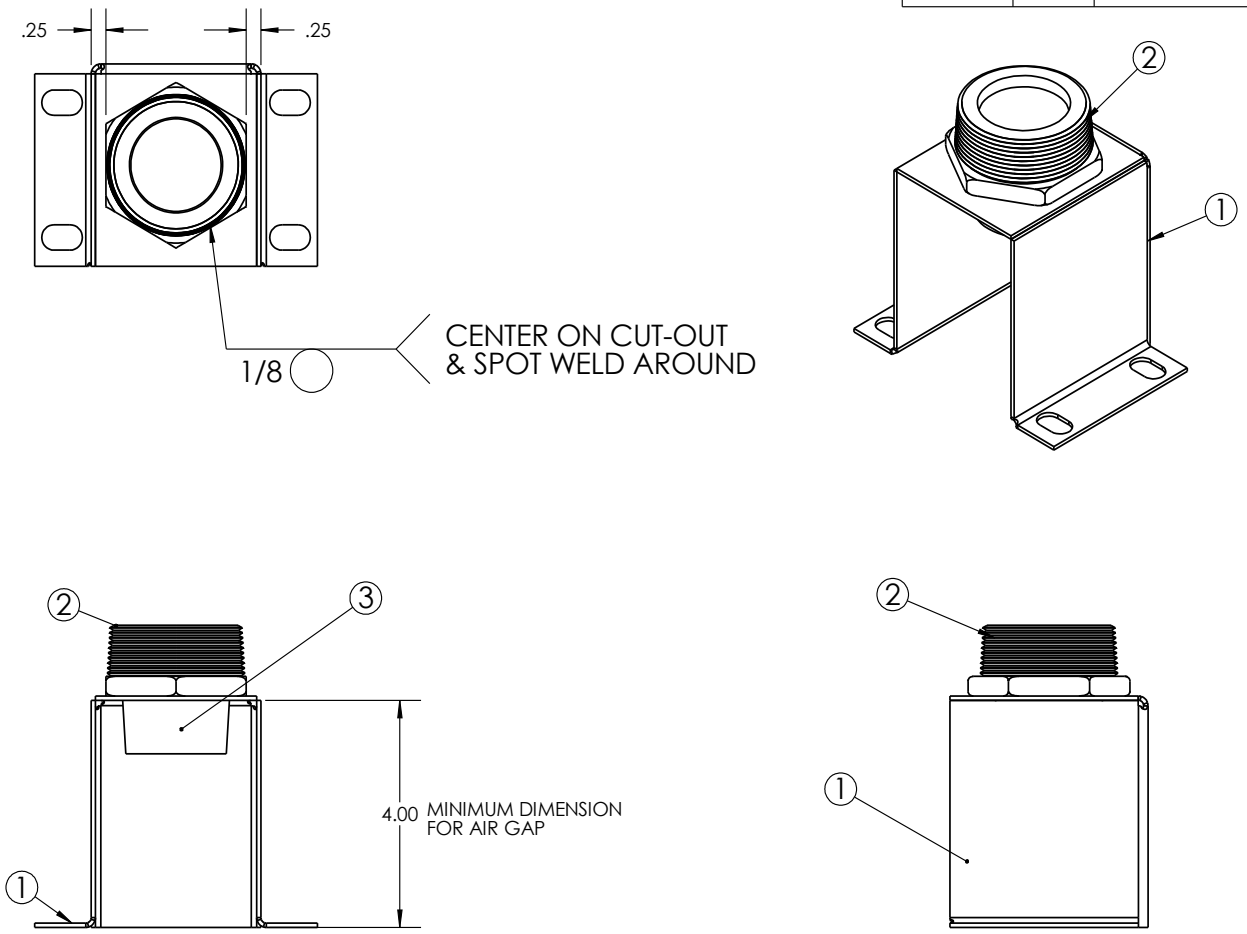

204V89 - WATER FILL 2/Y STRAINER

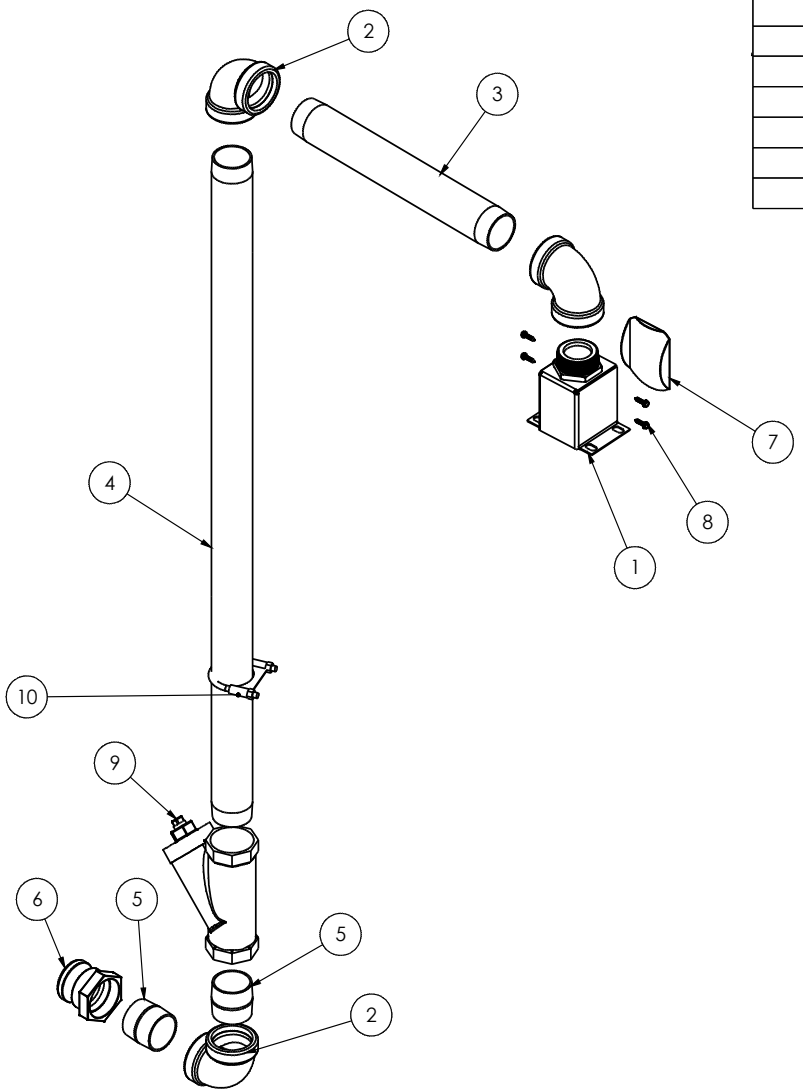

ITEM NO.	PART NUMBER	QTY.	DESCRIPTION
1	650550	1	WATER TANK AIR GAP ASSEMBLY
2	20957	3	ELBOW, 2" NPT GALVANIZED
3	53070	1	NIPPLE, 2.0 X 16.0 NPT
4	5224319	1	NIPPLE, 2.0 NPT X 45.50" LONG
5	20275	2	NIPPLE, 2.0 X CLOSE GALV
6	23644	1	CAM, 2.0 MALE LOCK
7	23837	1	SCREEN, 4-9/16
8	30468	4	SELF TAPPING SCREW, #10 X 3/4"
9	28710	1	Y-STRAINER, 2.0NPT BRONZE
10	20831	1	CLAMP,2 1/2" MUFFLER U-BOLT

204K15 - WATERFILL HARDLINE

ITEM NO.	PART NUMBER	DESCRIPTION	QTY.
1	20831	CLAMP,2 1/2" MUFFLER U-BOLT	3
2	524980	FILL, UPPER WATER	1
3	524978	FILL, INTERMEDIATE WATER	1
4	64907-24	LOWER FILL HOSE	1
5	64907-29	UPPER FILL HOSE	1
6	24884	2 1/2" T-BOLT CLAMP	4
7	525021	A7-A9 FILL HOSE BOX	1

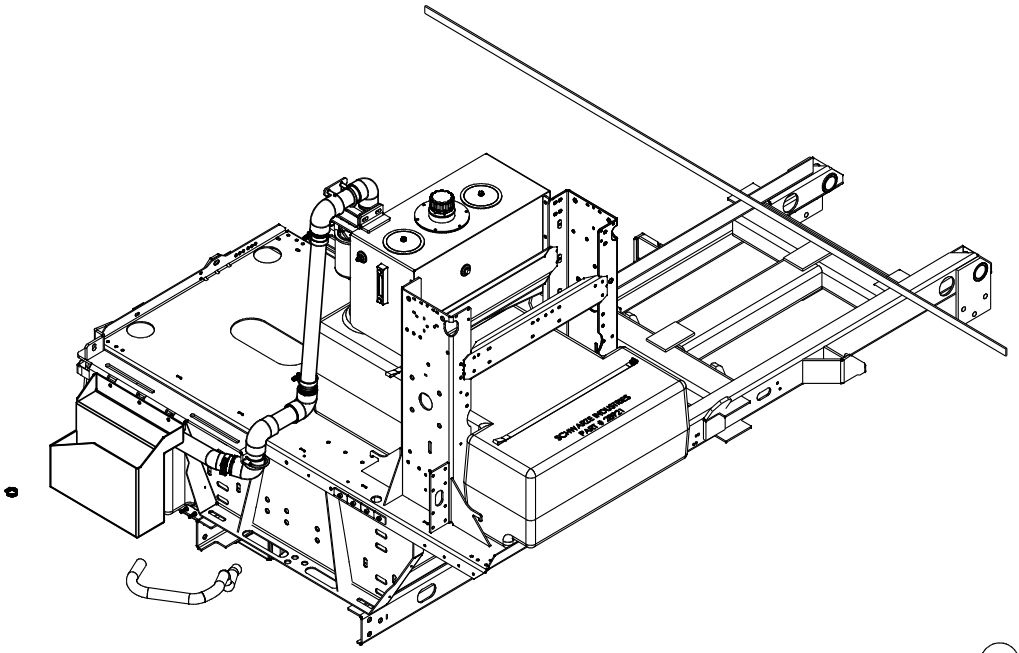

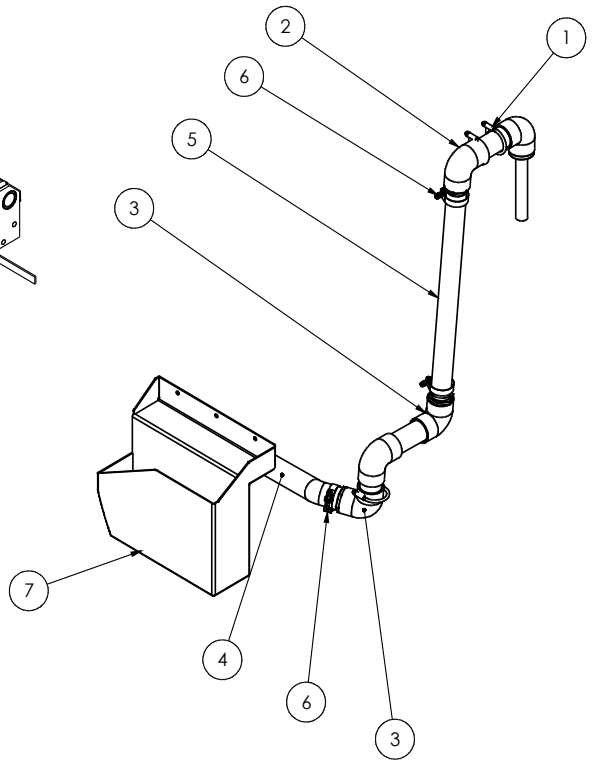

WATER TANK COMPONENTS SHOWN FOR REFERENCE ONLY

204Q05 - FRONT WALKDECK

ITEM NO.	PART NUMBER	QTY.	DESCRIPTION
1	525470	1	DECK, WORK PLATFORM
2	525471	1	HANDRAIL, WORKDECK ASSEMBLY
3	525469	1	LADDER, WORK DECK
4	5222917	1	POST, HANDRAIL PIVOTING
5	67254	2	HIGH VISIBILITY, QUICK-RELASE
6	525472	2	LEG, LADDER
7	5222964	1	PLATE, LADDER LOCK
8	204S98	1	LANYARD WITH EYE BOLT

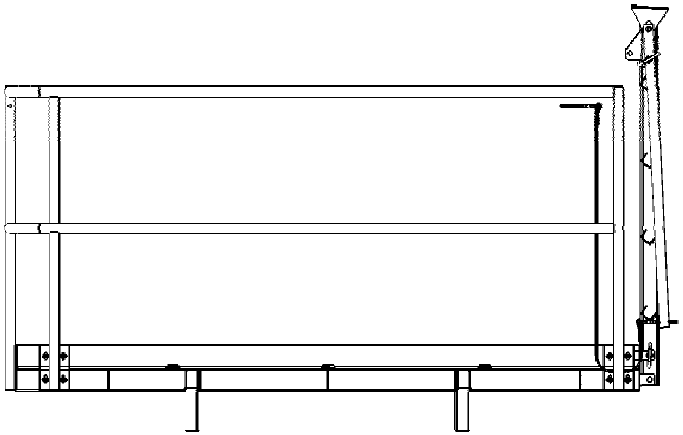

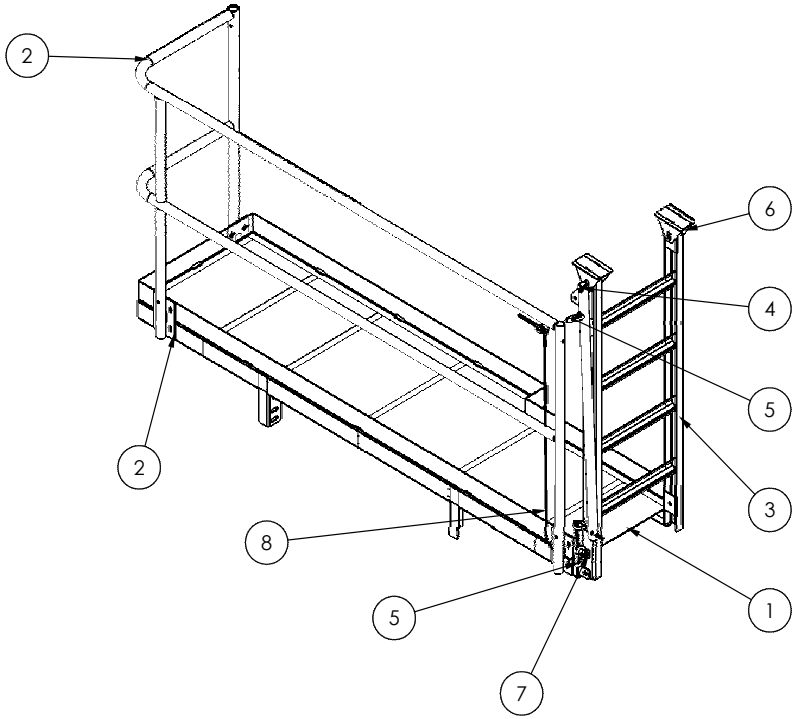

204S98 - LANYARD WITH EYE BOLT

ITEM NO.	PART NUMBER	QTY.	DESCRIPTION
1	29080-48	1	CABLE, 3/16" SS PER FOOT
2	62468	2	SLEEVE, ALUMINUM, 3/16
3	30620	2	EYEBOLT, 3/8-16 X 3"

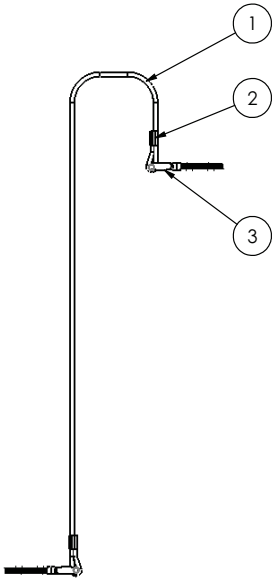

204X47 - WATER FILL

ITEM NO.	PART NUMBER	QTY.	DESCRIPTION
1	23644	1	CAM, 2.0 MALE LOCK
2	525016	1	FILL, LOWER WATER, A7 & A9
3	20831	2	CLAMP,2 1/2" MUFFLER U-BOLT

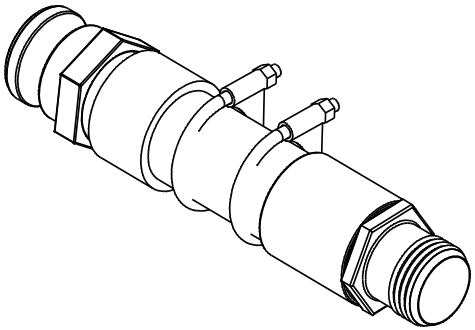

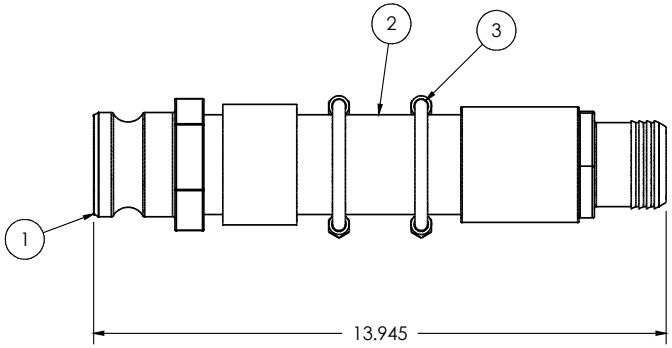

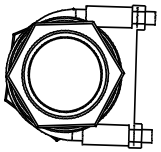

204L70 - WATER FILL HARDLNE W/STRAINER

ITEM NO	PART NUMBER	DESCRIPTION	QTY.
1	525157	FILL, LWR WTR W/ STRNR,A7 & A9	1
2	28710	Y-STRAINER, 2.0NPT BRONZE	1
3	23644	CAM, 2.0 MALE LOCK	1
4	20275	NIPPLE, 2.0 X CLOSE GALV	1
5	5221983	BRKT, LWR WTR FILL STRNR,A7/A9	1
6	20832	CLAMP, 3" MUFFLER	2

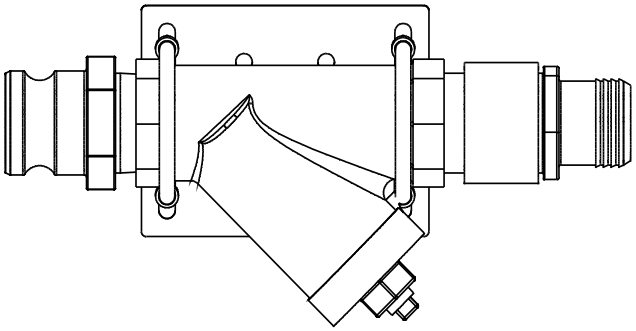

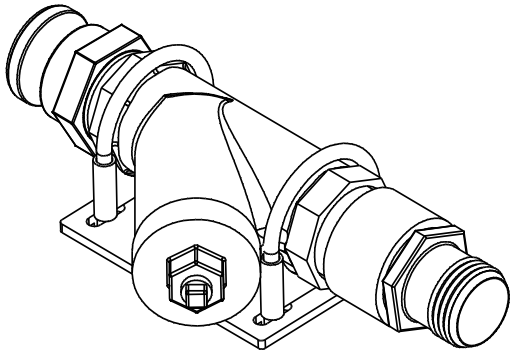

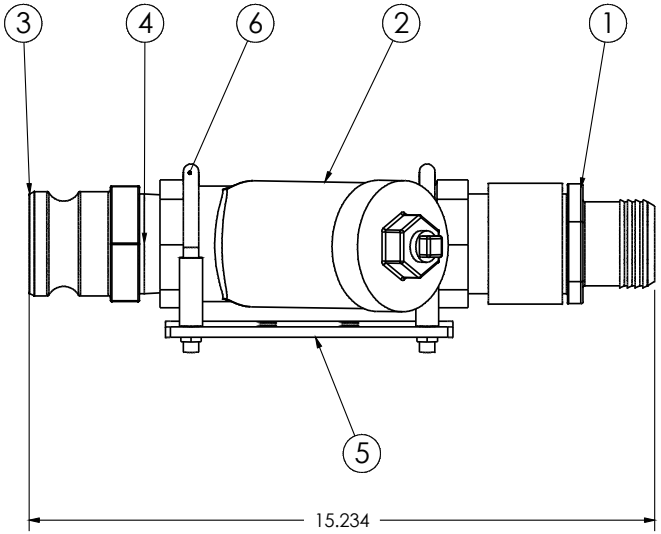

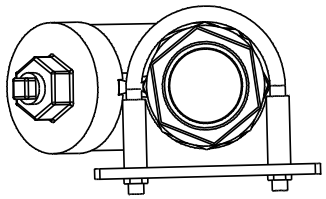

203G90 - WATERFILL (350 GAL)

ITEM	PART NO.	DESCRIPTION	QTY.
1	20957	ELBOW, 2" NPT GALVANIZED	3
2	53070	NIPPLE, 2.0 X 16.0 NPT	1
3	5207723	TUBE,HORIZ,DELUGE	1
4	20275	NIPPLE, 2.0 X CLOSE GALV	1
5	23644	CAM, 2.0 MALE LOCK	1
6	23837	SCREEN, 4-9/16	1
7	650550	WATER TANK AIR GAP ASSEMBLY	1
8	30468	SELF TAPPING SCREW, #10 X 3/4"	4
9	20831	CLAMP,2 1/2" MUFFLER U-BOLT	1

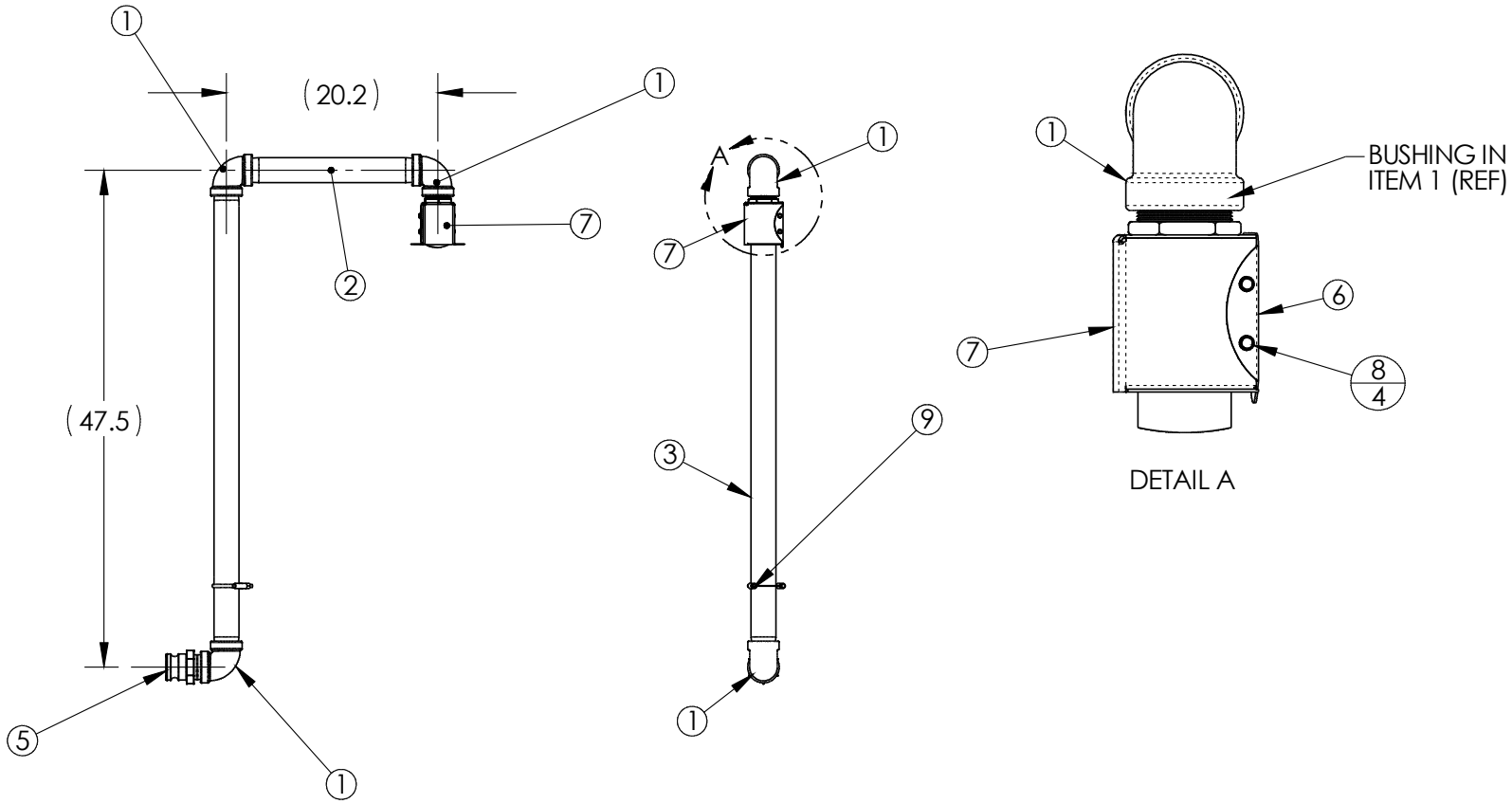

204R57 - FUEL SYSTEM INDEPENDENT

ITEM NO.	PART NUMBER	DESCRIPTION	QTY.
1	28902	TANK,56 GAL DIESEL FUEL	1
2	20244	PLUG, 1/2" SQUARE HEAD	3
3	5223194	BRCKT, FUEL GAUGE, INDEPT FUEL	1
4	54556	SENDER, FUEL SENDER	1
5	66947	ELBW 90 5/16" BARB TO 3/8 MNPT	1
6	66946	ELBOW, 90 3/8" BARB TO 1/2 MNP	1

ITEMS BELOW NOT SHOWN

ITEM NO.	PART NUMBER	DESCRIPTION	QTY.
7	24799	GAUGE, FUEL 240 OHM	1
8	65140	BULB KIT FOR 24799	1

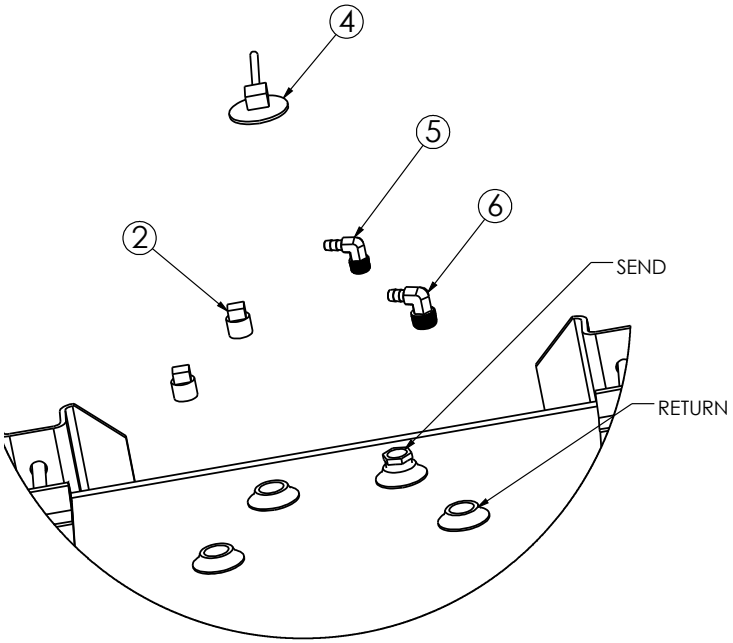

DETAIL C

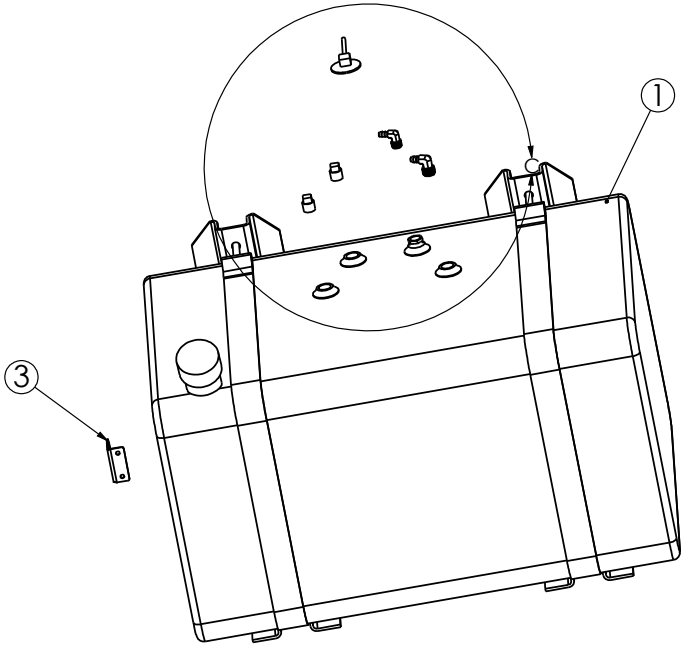

204K89 - TOOL TRAY WITHOUT TOOLBOX

ITEM NO.	PART NUMBER	QTY.	DESCRIPTION
1	525105	1	A7 TOOL TRAY WELD
2	5221269	2	DEF TANK STRAP, A8T

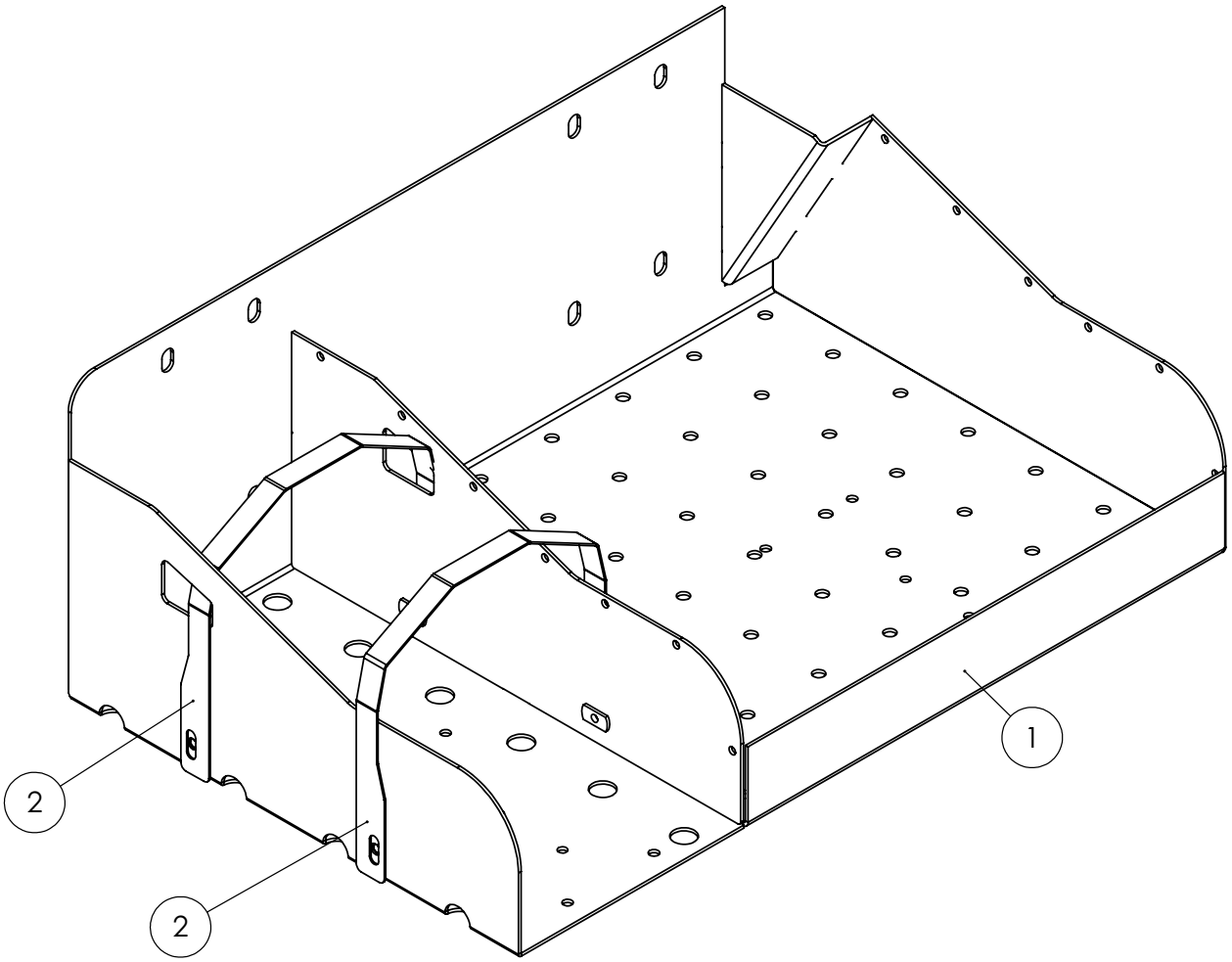

204K96 - TOOL TRAY WITH TOOLBOX

ITEM NO.	PART NUMBER	QTY.	DESCRIPTION
1	525011	1	A8T TOOLBOOX
2	65325	1	POLYMER UNDERBODY TOOL BOX
3	5221269	2	DEF TANK STRAP, A8T

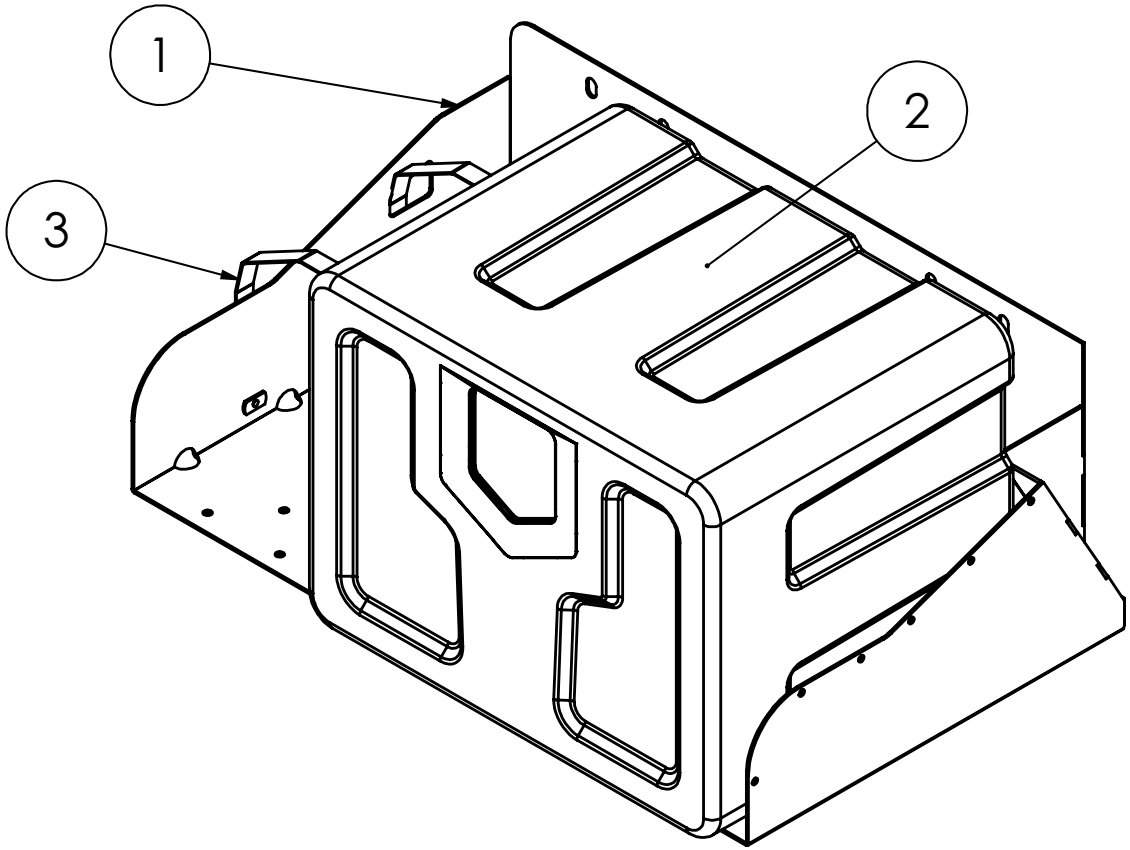

203465 - INDICATOR, AF REST, CHASSIS

ITEM NO.	PART NUMBER	QTY.	DESCRIPTION
1	24287	1	AIR FILTER RESTRICTION INDICAT
2	20065	2	FITTING, 1/8 X 1/8 NPT
3	20131	1	COUPLING,1/8 NPT BRASS

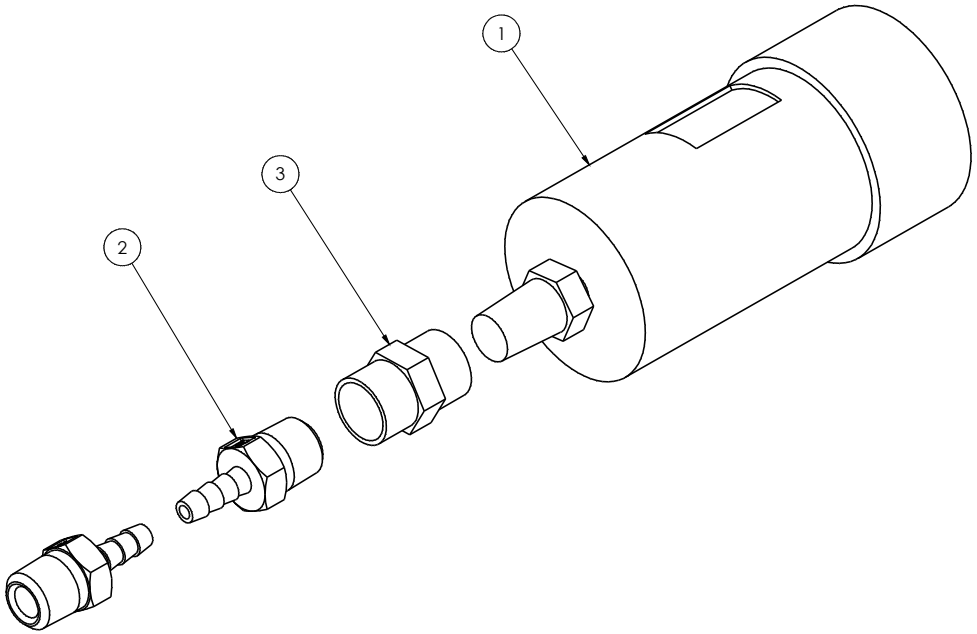

203X78 - SELF DUMP MAGNET M2

ITEM NO.	PART NUMBER	Default/QTY.	DESCRIPTION
1	520750	1	BAR MAGNET HOUSING, SELF DUMP
2	520752	1	BAR MAGNET CASING (HYD)
3	5203407	1	PLATE, LH COVER HOUSING,MAGNET
4	20035	1	ACTUATOR, 6"
5	520753	1	ACTUATOR LIFTING ARM, MAGNET
6	5203413	1	BAR MAGNET HOUSING PLATE RIGHT
7	30620	2	EYEBOLT, 3/8-16 X 3"
8	20000	2	SHACKLE, 1/4" ANCHOR
9	20814-7	2	CHAIN, 1/4 7 LINKS
10	21801	2	BEARING, 1" BORE FLANGE TYPE
11	24608	2	COLLAR, 1" I.D. SPLIT LOCKING
12	520751	1	WELD, BKT, MNTG, BMPR, REM-MAG
13	5218146	1	BRACKET LH UP MAGNET JIPCO
14	5218147	1	BRACKET RH UP MAGNET JIPCO
15	5218139	1	ANCHOR,BKT,RH,REM-MAG,M2
16	5218140	1	ANCHOR,BKT,LH,REM-MAG,M2
17	5216270	2	LINK, ACTUATOR MAGNET LIFT IH
18	523476	1	MOUNT, ACTUATOR MAGNET IH
19	24139	1	ACTUATOR, 6", 12V, BALL SCREW
20	33014	2	.500 X 2.0 CLEVIS PIN
21	60669	1	CLEVIS PIN, 1" DIA, 2" USABLE

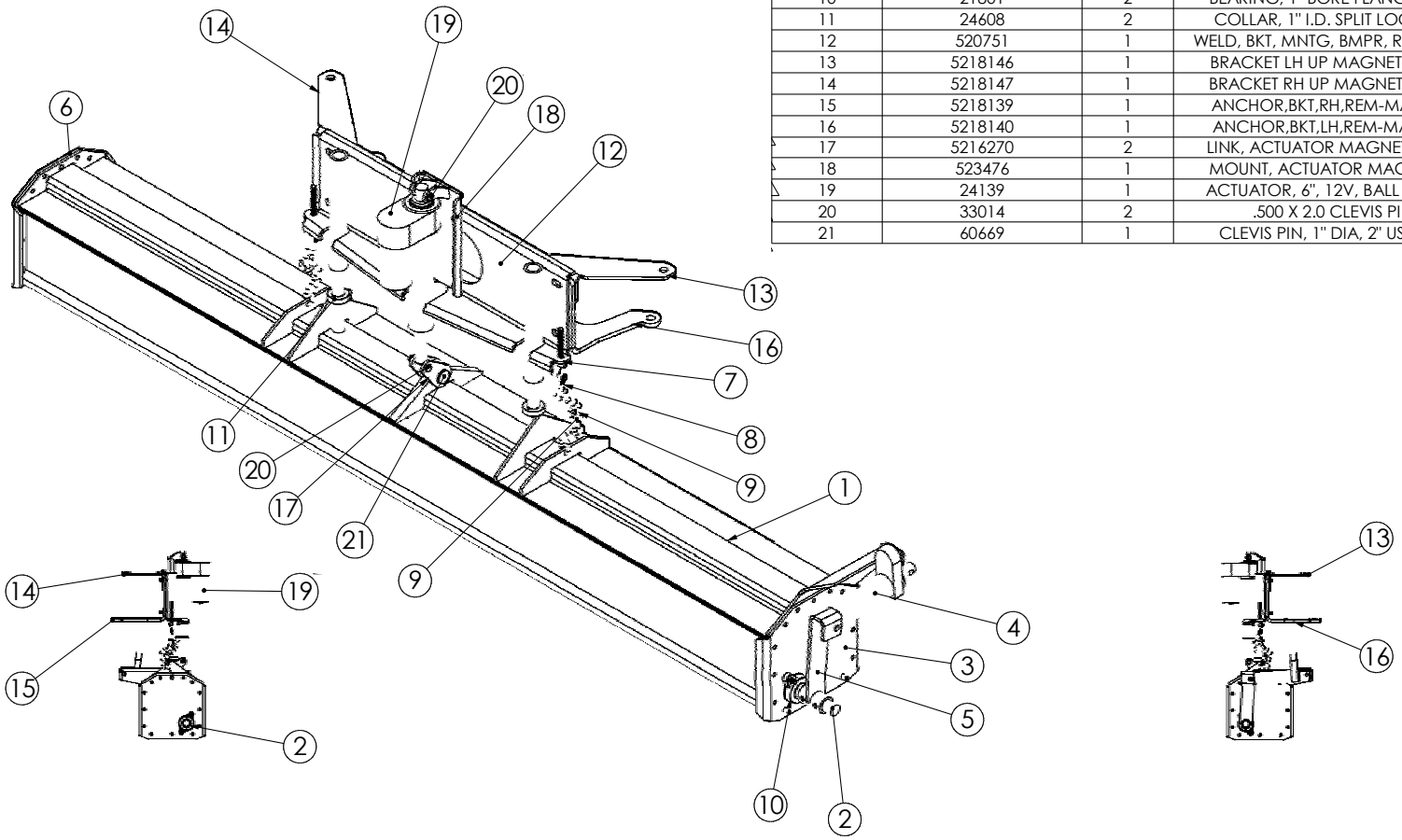

204A38 - BAR MAGNET MOUNT 90”

ITEM NO.	PART NUMBER	QTY.	DESCRIPTION
1	203Z84	1	ASSY, 90" BAR MAGNET
2	523862	2	BKT, MTG, B-MAG, M2

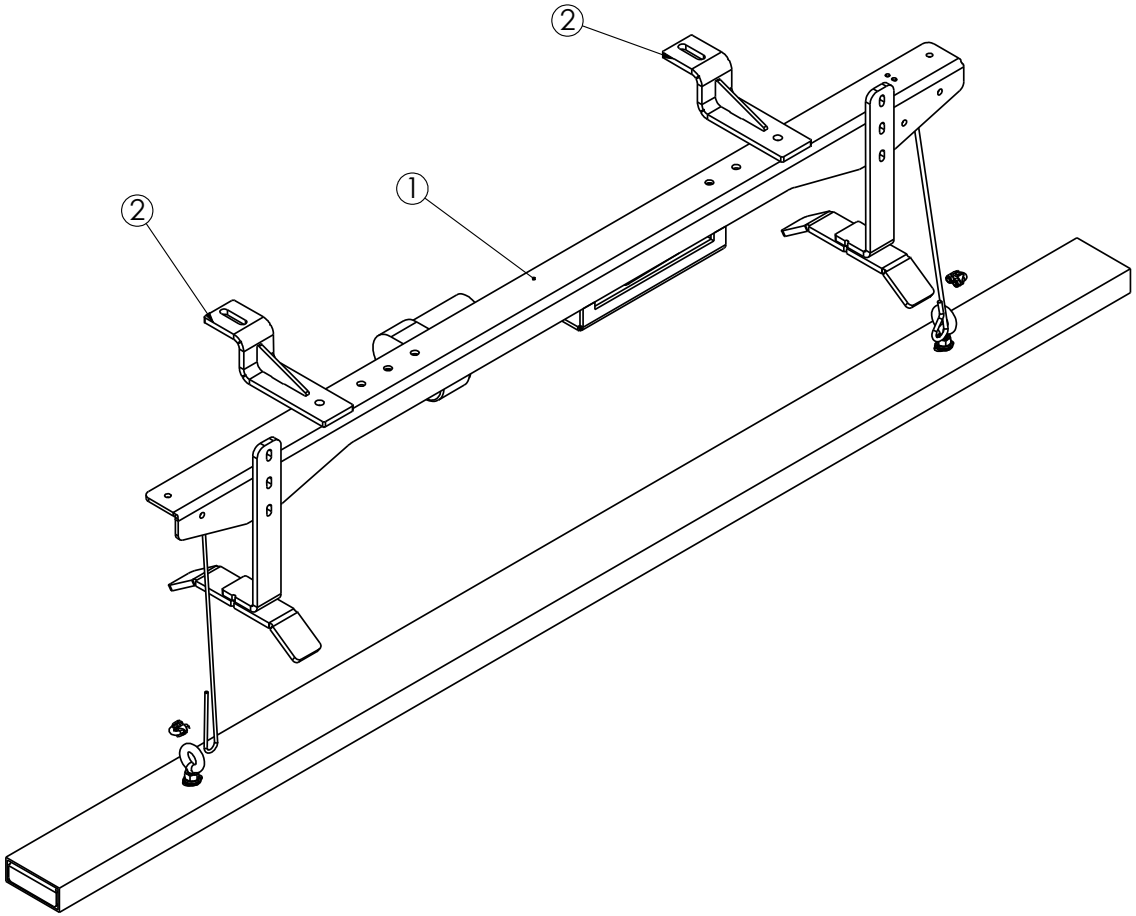

203Z84 - BAR MAGNET 90”

ITEM NO.	PART NUMBER	QTY.	DESCRIPTION
1	523753	1	WELD,BKT,B-MGNT,A7-08
2	521248	1	BAR MAGNET, 90"
3	20036R	1	8" ACTUATER, ROTATED
4	524421	2	UPSTOP, MAGNET, 10.125" LONG
5	5217228	2	LINK,PULLER,B-MAG,A7-08
6	20218	5	PULLEY BLOCK
7	21824	3	CLAMP, 3/16" CABLE
8	203472	1	CONSOLE,MAGNET,BAR,90"
9	22099-75	1	MAGNET CABLE, RH-SIDE
10	22099-132	1	MAGNET CABLE, LH-SIDE

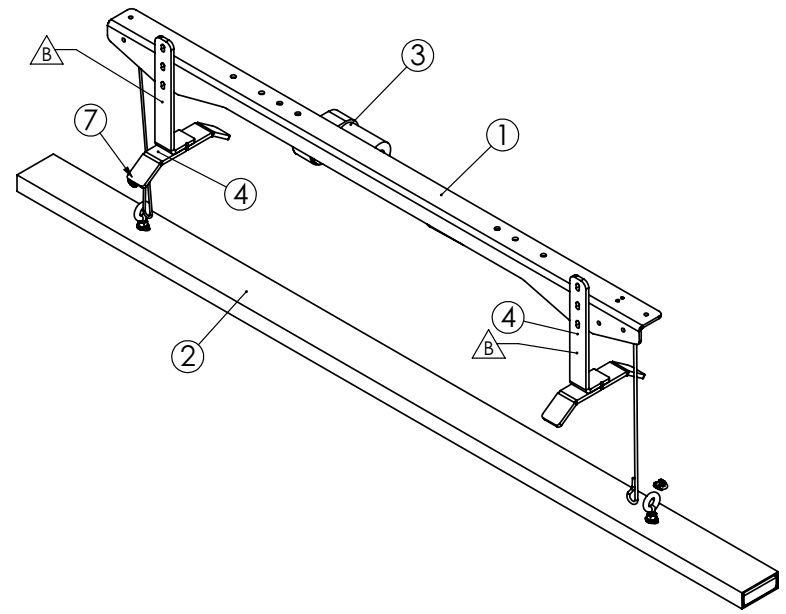

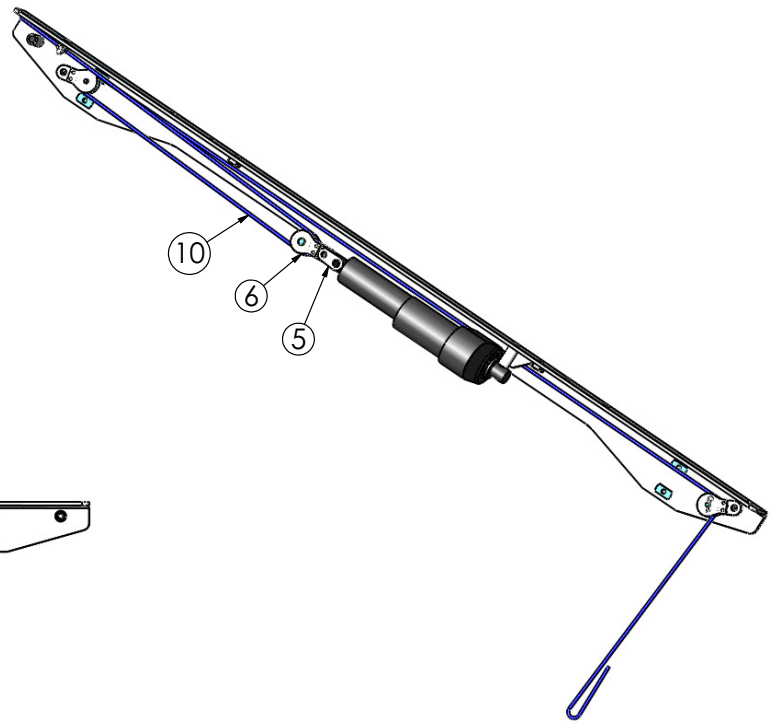

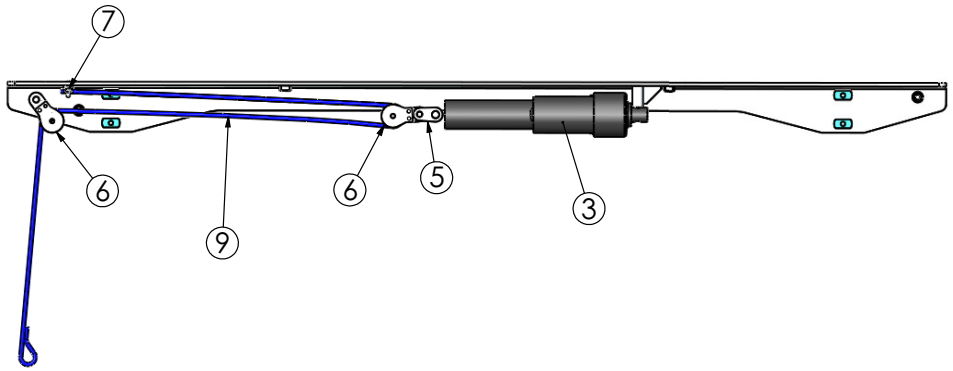

204H16 - MAGNET BAR 90” MOUNT M2

ITEM NO.	PART NUMBER	QTY.	DESCRIPTION
1	204H15	1	ASSY, 90" BAR MAGNET, OPTION
2	523862	2	BKT, MTG, B-MAG, M2

*COMPONENTS NOT SHOWN

	ITEM NO.	PART NUMBER	QTY.	DESCRIPTION
*	3	62715	1	SWITCH, ACTUATOR, MAGNET UP-DN
*	4	20447	1	LIGHT, RED INDICATOR
*	5	62610	1	CONTURA II, MOM/OFF/MOM

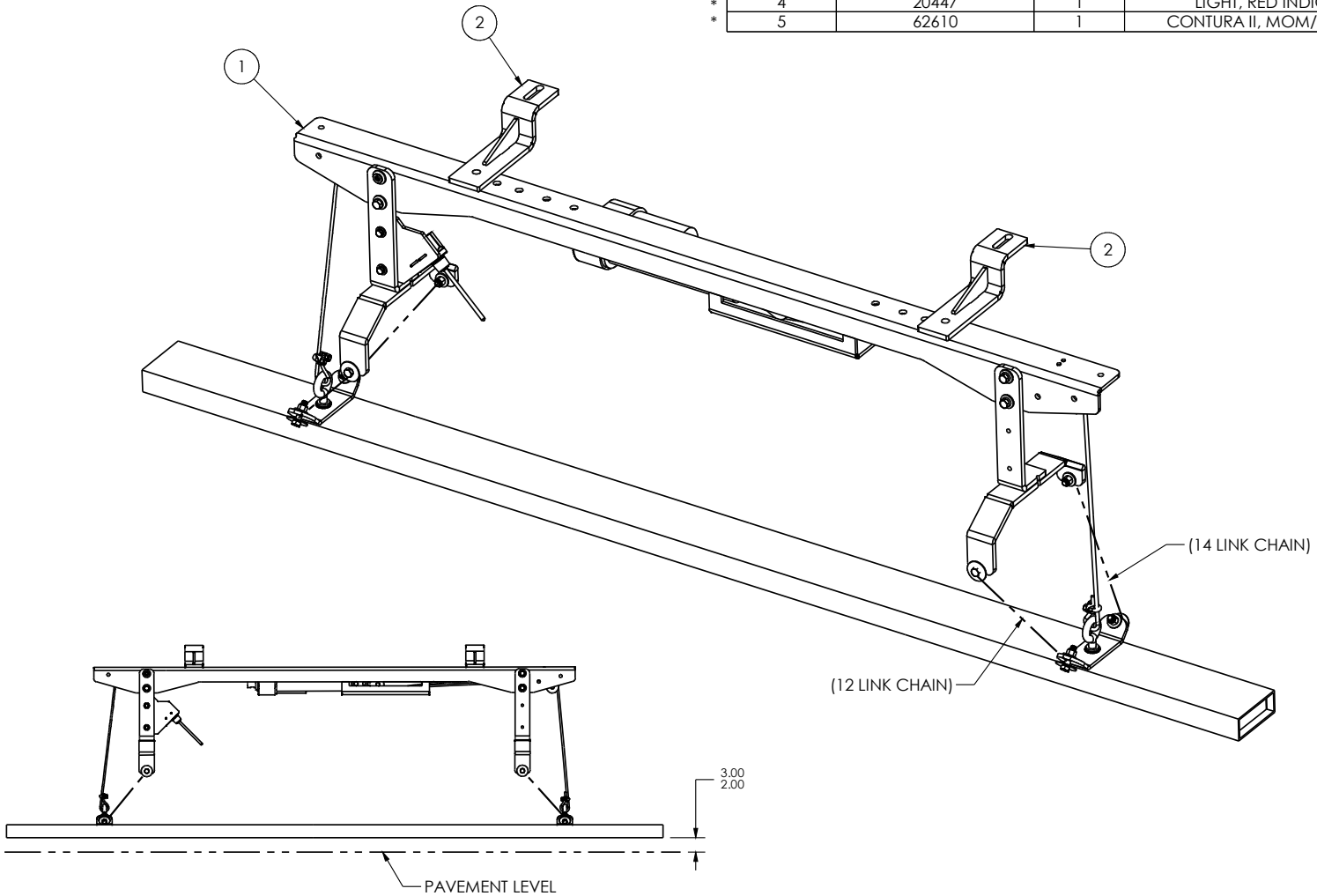

204H15 - MAGNET BAR 90”

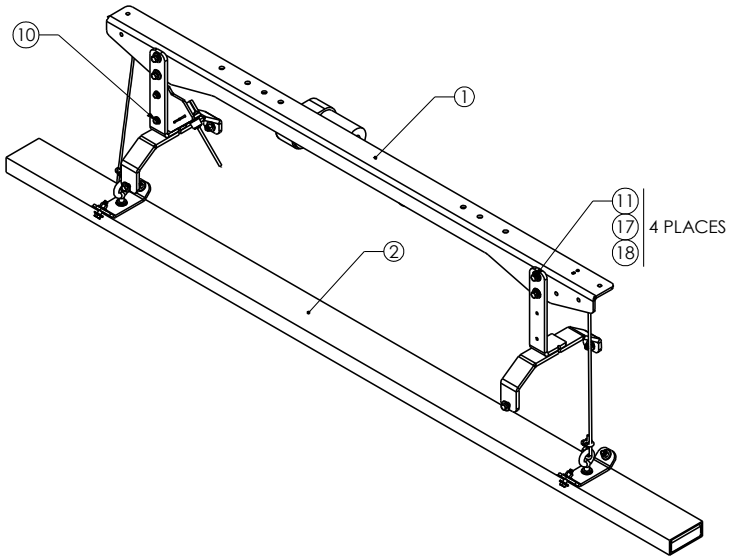

ITEM NO.	PART NUMBER	Default/QTY.	DESCRIPTION
1	523753	1	WELD,BKT,B-MGNT,A7-08
2	204H14	1	BAR MAGNET, WITH BRACKETS, 90
3	20036R	1	8" ACTUATER, ROTATED
4	5217228	2	LINK,PULLER,B-MAG,A7-08
5	22099-76	1	MAGNET CABLE, RH-SIDE
6	22099-314	1	MAGNET CABLE, LH-SIDE
7	524669	2	UPSTOP, W SENSOR MOUNT, WLDMT
8	21506	1	LIMIT SWITCH
9	5219918	1	BRACKET, LIMIT INDICATOR
10	30653	2	BOLT, 1/4-20X1.25
11	30671	4	3/8-16 X 1.0 HEX BOLT G5
12	30673	8	BOLT,3/8-16 UNC X 1 1/2,HEX
13	21824	3	CLAMP, 3/16" CABLE
14	31149	2	1/4-20 LOCK NUT
15	31154	8	NUT, 3/8-16 NYLOCK
16	20218	5	PULLEY BLOCK
17	32128	4	LOCK WASHER 3/8
18	31593	20	FLAT WASHER 3/8
19	31589	4	WASHER,1/4 FLAT
20	31604	2	WASHER,1/4 LOCK
21	20815-12	2	CHAIN, 3/16" LINKS
22	20815-14	2	CHAIN, 3/16" LINKS

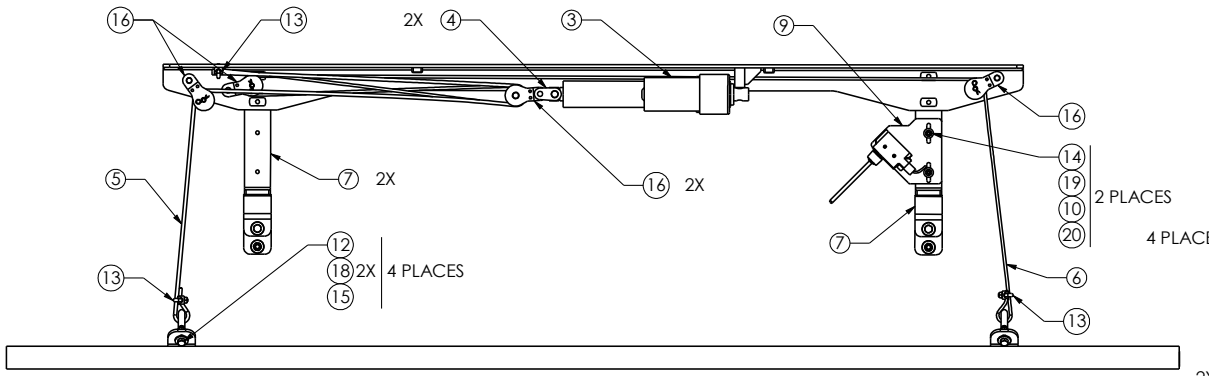

(REAR VIEW)

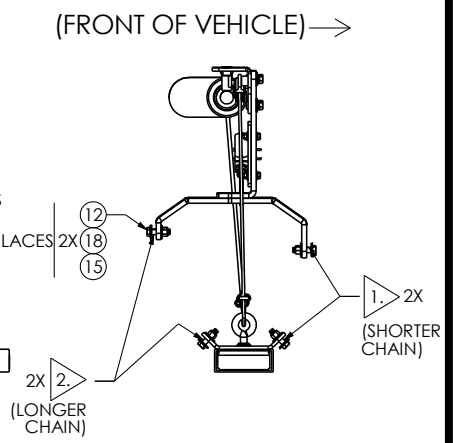

NOTES:

1. INSTALL F/N: 21 AS SHOWN

2. INSTALL F/N: 22 AS SHOWN

204H17 - BRKT, UPSTOP W/SENSOR ASSY

ITEM NO.	PART NUMBER	QTY.	DESCRIPTION
1	5219918	1	BRACKET, LIMIT INDICATOR
2	21506	1	LIMIT SWITCH

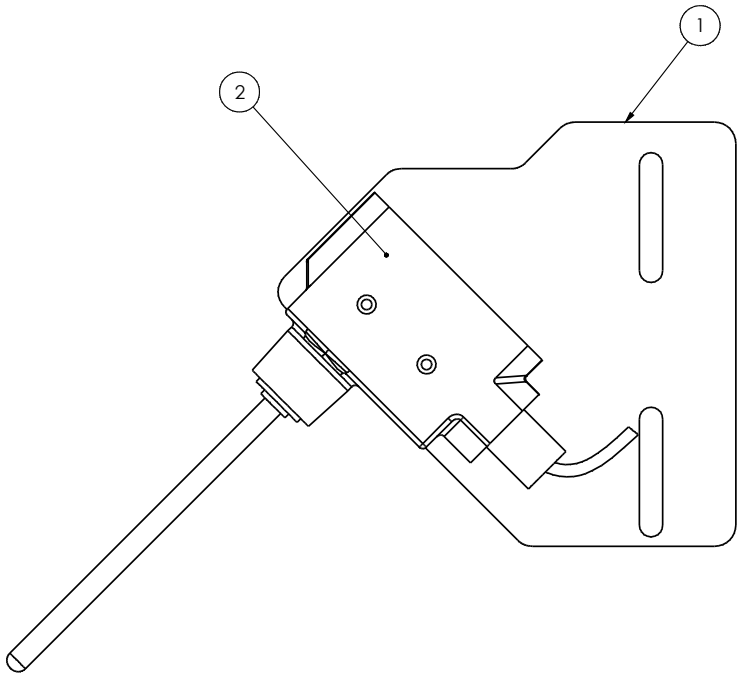

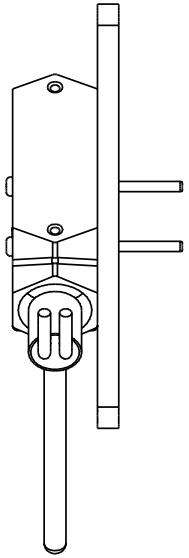

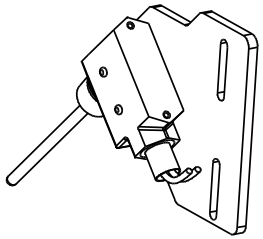

204L62 - SELF DUMP MAGNET JIPCO M2

ITEM NO.	PART NUMBER	Default /QTY.	DESCRIPTION
1	520750	1	BAR MAGNET HOUSING, SELF DUMP
2	520752	1	BAR MAGNET CASING (HYD)
3	5203407	1	PLATE, LH COVER HOUSING,MAGNET
4	20035	1	ACTUATOR, 6"
5	520753	1	ACTUATOR LIFTING ARM, MAGNET
6	5203413	1	BAR MAGNET HOUSING PLATE RIGHT
7	30620	2	EYEBOLT, 3/8-16 X 3"
8	20000	2	SHACKLE, 1/4" ANCHOR
9	20814-7	2	CHAIN, 1/4 7 LINKS
10	21801	2	BEARING, 1" BORE FLANGE TYPE
11	24608	2	COLLAR, 1" I.D. SPLIT LOCKING
12	520751	1	520751
13	5218146	1	BRACKET LH UP MAGNET
14	5218147	1	BRACKET RH UP MAGNET
15	5216270	2	LINK, ACTUATOR MAGNET LIFT IH
16	523476	1	MOUNT, ACTUATOR MAGNET IH
17	24139	1	ACTUATOR, 6", 12V, BALL SCREW
18	3002409	1	BRACKET LH LOW MAG PACCAR
19	3002410	1	BRACKET RH LOW MAG PACCAR

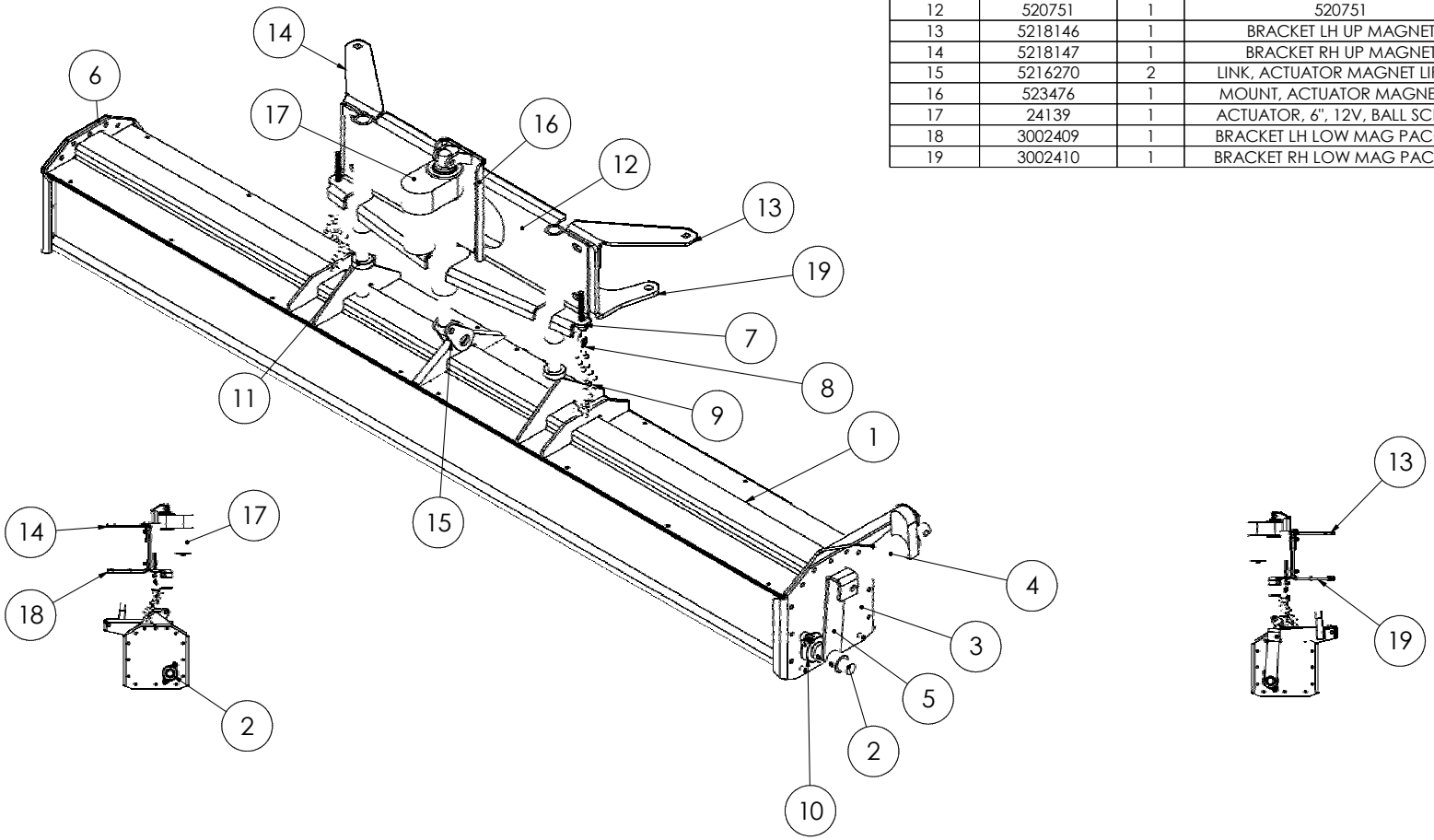

204Q25 - TRUCK KIT, M2 A9T, SWB 164”

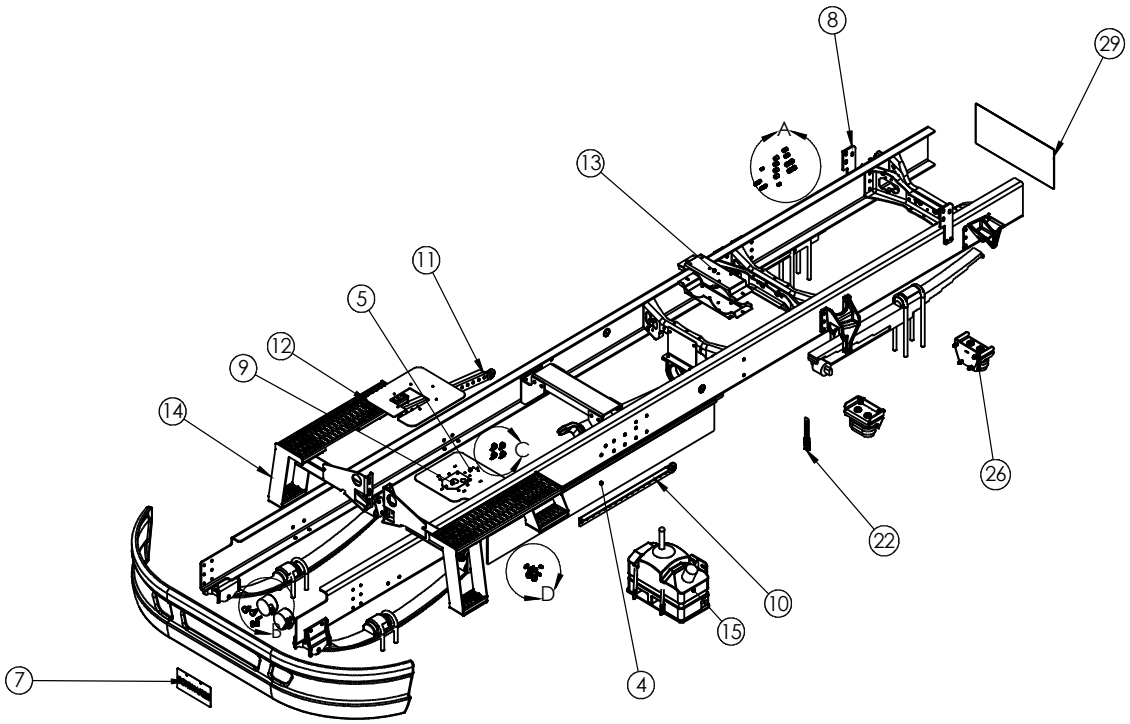

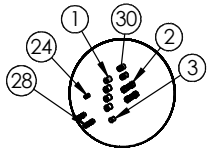

DETAIL A

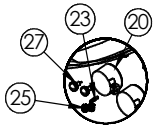

DETAIL B

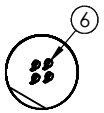

DETAIL C

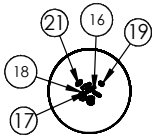

DETAIL D

ITEM NO.	PART NUMBER	DESCRIPTION	QTY.
1	21342	REDUCER, 1/2 MNPT X 1/4 FNPT,BRASS	7
2	20164	UNION, 1/2 COMPRESSION	2
3	21349	BUSHING,3/8 MNPT X 1/4 FNPT BR	1
4	520030	CENTER DEFLECTOR, GUTTER BROOM	1
5	525045	CONSOLE PLATE WELD M2	1
6	20140	CLAMP, 1.0" RUBBER LINED	4
7	50448	LICENSE PLATE TAG	1
8	5222605	TIE DOWN, RH, A7T, SWB	2
9	6502339	PLATE, BULKHEAD, UD M6000	1
10	523822	WELD DRAG LNK FRNT EXT LEFT	1
11	523823	WELD DRAG LNK FRNT EXT RIGHT	1
12	5221430	UNDERCAB CONSOLE SUPPORT M2	1
13	5222723	MOUNT, RELOCATION AIR TANK	2
14	204L87	INSTALL, RUNNING BOARDS,A7M2	1
15	204Q37	INSTALL, DEF TANK A7, A8,A9	1
16	20146	3/8 HOSE X 1/8 MALE PIPE HOSE	1
17	20070	3/8 HOSE X 1/4 MALE PIPE HOSE	2
18	20258	3/4" X 1/2" BUSHING	2
19	21930	PLUG, 1/4" NPT VENTED PIPE	1
20	20339	CURB LIGHT WITH BRACKET	2
21	20815	3/16" CHAIN LINK	7 FT
22	21025	TAILPIPE HANGER	1
23	20135	BARB,5/16 HOSE X 1/8 MNPT	1
24	20131	COUPLING,1/8 NPT BRASS	1
25	20248	1/2" X 3/8" BUSHING, BLACK IRON	2
26	203V10	SPRING KIT, RUBBER, GMC	1
27	21093	UTILITY LIGHT	2
28	22442	UNION, 3/8 AIRBRAKE, BRASS	2
29	21706	FLAP, 1/8 X 12 SKIRTBOARD	2
30	20897	1/4" COUPLING, BRASS	2

ITEMS NOT SHOWN

ITEM NO.	PART NUMBER	DESCRIPTION	QTY.
31	22623	TUBE, FUEL PICK UP, 235TE	10 FT
32	20541-5.5	5/16 X 5.5 FUEL HOSE	5.5 FT
33	20541	5/16 X 36 FUEL HOSE	36 FT
34	20281	FLEXGUARD, 250 - 1/4" X 20'	10 FT
35	20534	1/4" I.D. FUEL LINE	8 FT
36	20529	TUBING, 3/8 NYLON	25 FT
37	20540	HOSE, 3/8 FUEL PER FOOT	10 FT
38	21909	TUBING, 5/8" NYLON	25 FT
39	20357	CLAMP, 4" U-BOLT	1
40	522167	CABLE, BATTERY 2' LONG	1
41	522185	CABLE, BATTERY 3' LONG 6GA	1
42	50327	CABLE, BATTERY 6 1/2 LONG	1
43	522939	CABLE, BATTERY 7' LONG	1
44	20312	WIRE, 14 GA-BROWN	10 FT
45	20314	WIRE, 14 GA- ORANGE	10 FT
46	29340	FLAP, CTR A7, A8, A9 IF & FL	1
47	29878	SHEATHING, 3" NYLON W/ VELCRO	14 FT
48	29885	CABLE, BATTERY 8 1/2 LONG	3
49	5223084	BRKT,CTR DEF FRT CHAIN, A-M2	1
50	65951	HARNESS, CONSOLE EXT, A7T M2	1
51	20150	HOSE CLAMP, #6	4
52	29819	CABLE, BATTERY 13' LONG	1
53	24585	ABRASION SLEEVE 1.73" ID PER F	50 FT
54	29955	CABLE, BATTERY 14' LONG	2
55	20054	UNION, 5/8 AIRBRAKE	2
56	21702	FLAP 1/4X6-1/2 SKRTBRD PER FT	3 FT
57	21910	UNION, 1/4" AIR BRAKE	1
58	24584	ABRASION SLEEVE 1.22" ID - FT	50 FT
59	24586	ABRASION SLEEVE 2.17" ID - FT	50 FT

204L87 - RUNNING BRDS M2 JIPCO

ITEM NO.	PART NUMBER	QTY.	DESCRIPTION
1	524008	1	WLD,BKT,FT,LH, R-B, M2-T3
2	524009	1	WLD, BKT,FT,RH, R-B, M2-T3
3	525462	1	RUNNING BOARD RH A7, M2 SHORT
4	525463	1	RUNNING BOARD LH A7, M2 SHORT

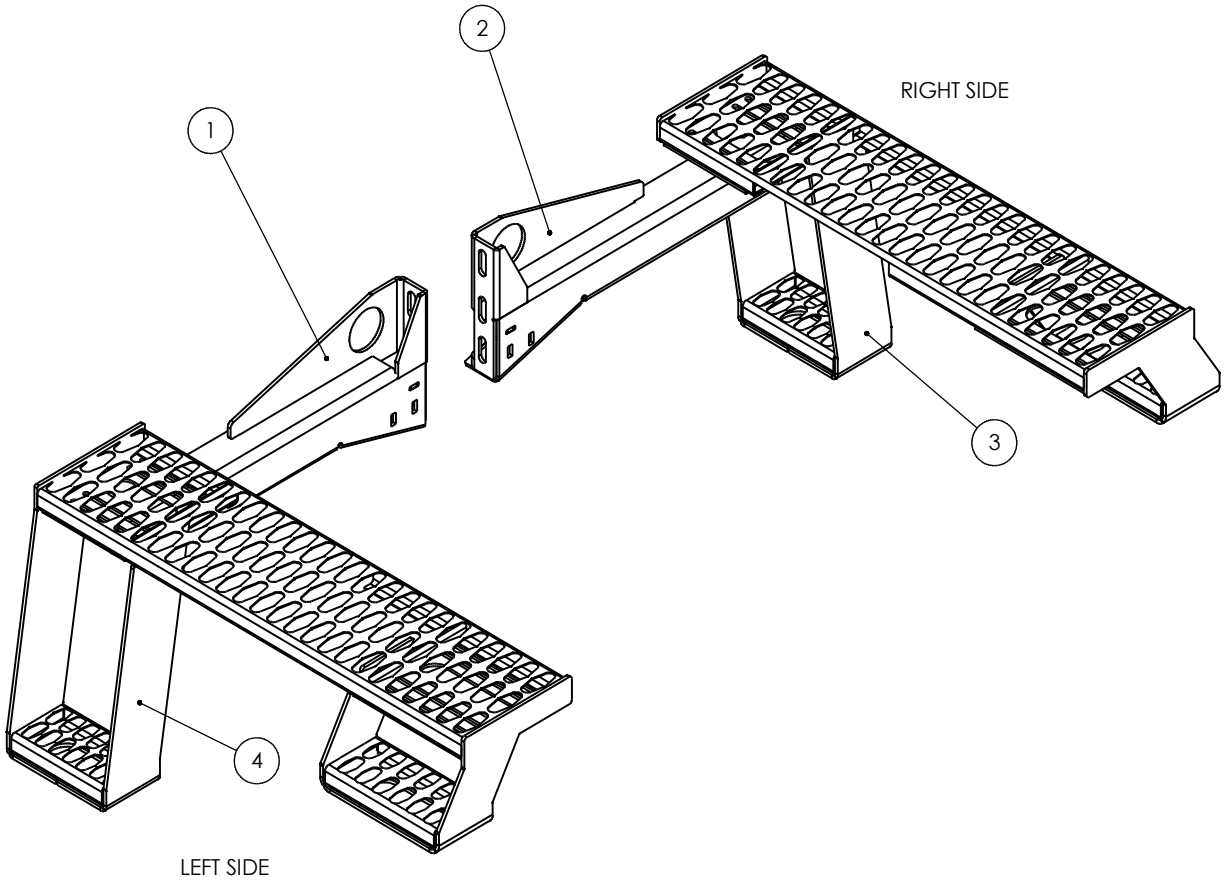

203Q23 - ASSY, BOX, BATT, DUAL, IH-08

ITEM NO.	PART NUMBER	QTY.	DESCRIPTION
1	523765	1	WELD,BOX,BATT,DUAL,IH-08
2	5217252	1	LID,BOX,BATT,IH-08
3	30673	2	BOLT,3/8-16 UNC X 1 1/2,HEX
4	30671	1	3/8-16 X 1.0 HEX BOLT G5
5	31593	1	FLAT WASHER 3/8
6	5216423	1	TIE DOWN, BATTER BOX, A8000 IH
7	91102A031	1	LOCK WASHER 3/8
8	59875	2	GROMMET, OVAL 6"

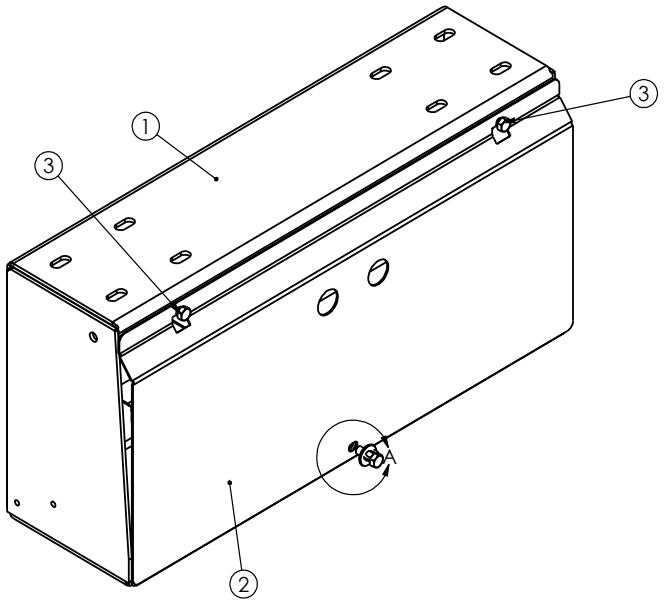

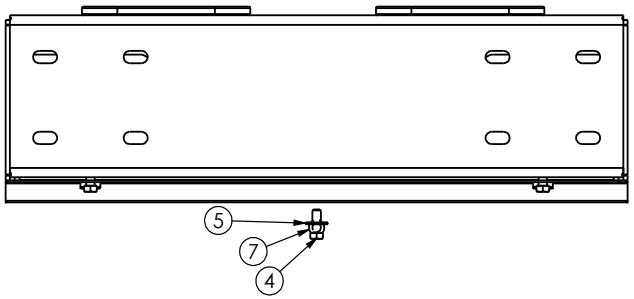

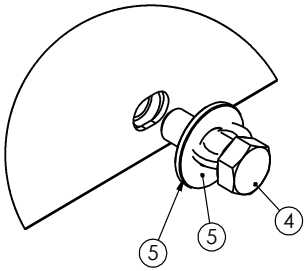

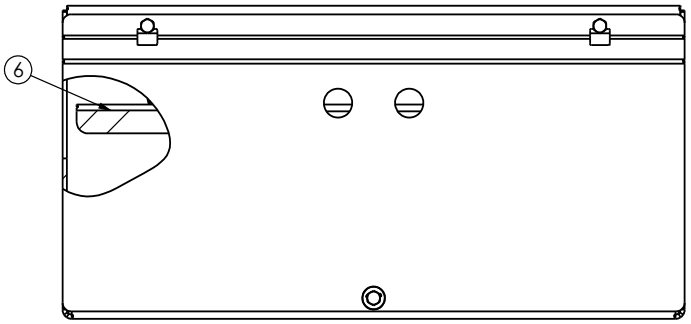

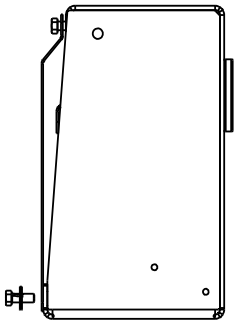

204A34 - TANK, FUEL INTERNATIONAL

ITEM NO.	PART NUMBER	DESCRIPTION	QTY.
1	28902	TANK,56 GAL DIESEL FUEL	1
2	21349	BUSHING,3/8 MNPT X 1/4 FNPT BR	2
3	20975	ELBOW, 3/8 " NPT STREET BRASS	4
4	20136	BARB,5/16 HOSE X 1/4 MNPT	1
5	21344	BUSHING,1/2 MNPT X 3/8 FNPT BRASS	2
6	20059	1/2" NYLON X 3/8 MPT CONN. AIR	2
7	20070	3/8 HOSE X 1/4 MALE PIPE HOSE	1

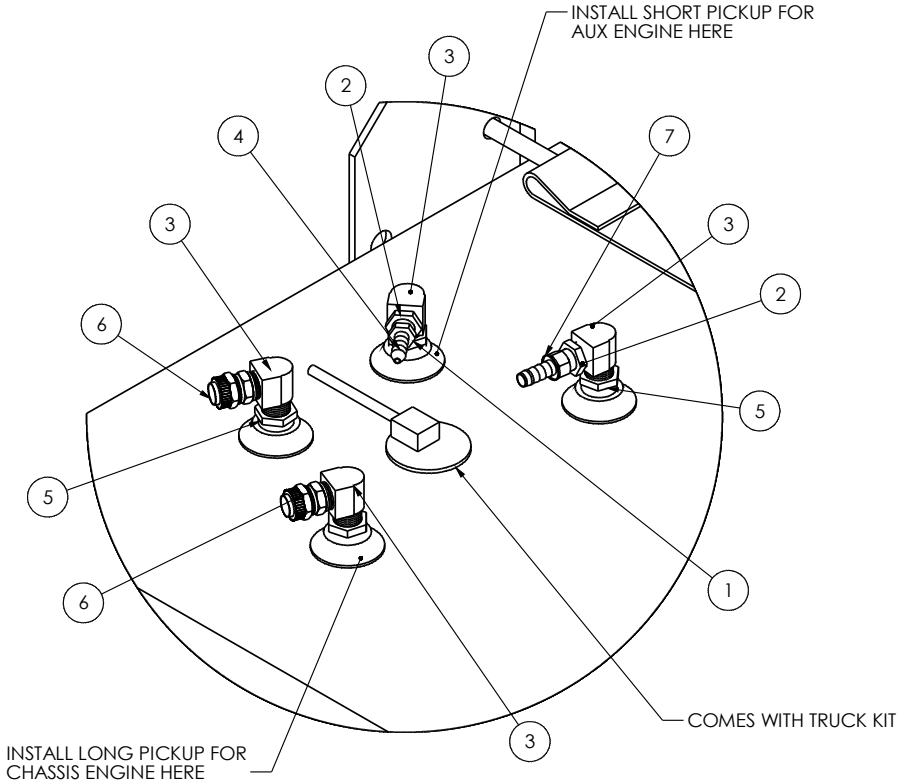

DETAIL C

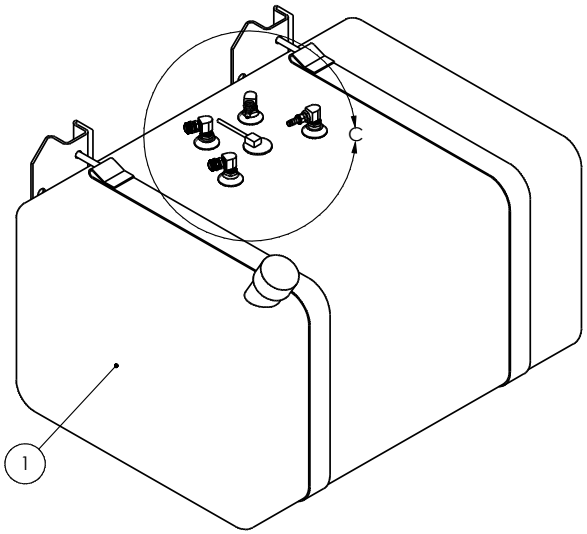

204M53 - LOAD WEIGHT INDICATOR TIER4

ITEM NO.	PART NUMBER	Default/QTY.	DESCRIPTION
1	5223206	1	ADAPTER, LOAD WEIGHT PLATE
2	5223195	1	MOUNT, SENSOR, HALL EFFECT
3	5221584	1	LEVER, HALL EFFECT SENSOR, FAN
4	65794	1	SENSOR, HALL EFFECT
5	65399	2	HOSE CLAMP,5/16 HIGH PRESS
6	5223222	2	ROD, LOAD WEIGHT
7	65568	2	ROD END, 1/4-28 /2458K321
8	5223196	1	WRAP, UPPER LD WT GV
9	5221283	1	WRAP, AXLE LD WT IND

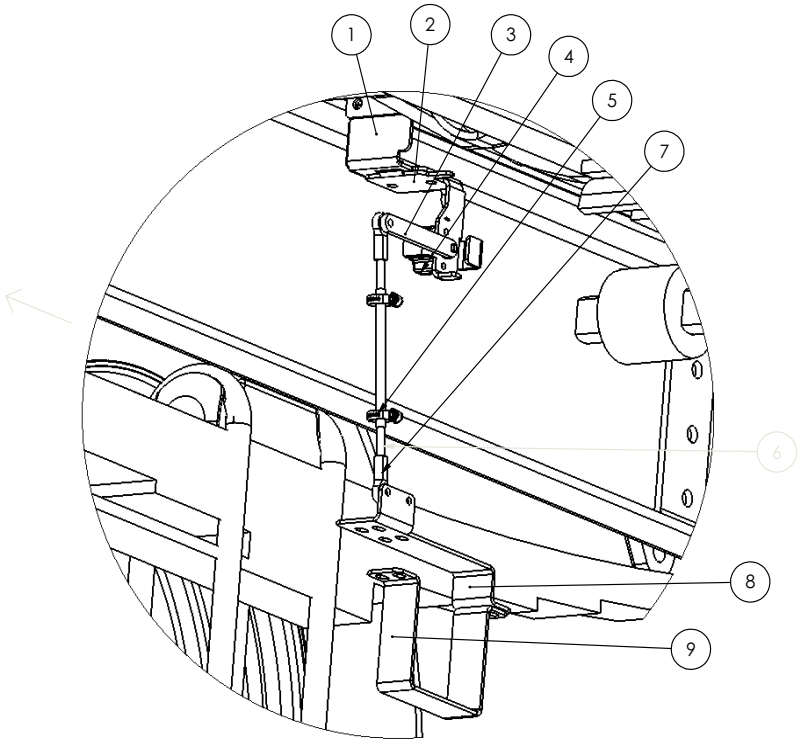

204D68 - SELF DUMP MAGNET, IH

ITEM NO.	PART NUMBER	Default/QTY.	DESCRIPTION
1	520750	1	BAR MAGNET HOUSING, SELF DUMP
2	520752	1	BAR MAGNET CASING (HYD)
3	5203407	1	PLATE, LH COVER HOUSING,MAGNET
4	20035	1	ACTUATOR, 6"
5	520753	1	ACTUATOR LIFTING ARM, MAGNET
6	5203413	1	BAR MAGNET HOUSING PLATE RIGHT
7	30620	2	EYEBOLT, 3/8-16 X 3"
8	20000	2	SHACKLE, 1/4" ANCHOR
9	20814-7	2	CHAIN, 1/4 7 LINKS
10	21801	2	BEARING, 1" BORE FLANGE TYPE
11	24608	2	COLLAR, 1" I.D. SPLIT LOCKING
12	520751	1	WELD, BKT, MNTG, BMPR, REM-MAG
13	5213828	2	LINK, ACTUATOR MAGNET LIFT
14	5219390	1	MNT, IH SELF DUMP MAG UPPER LH
15	5219388	1	MNT, IH SELF DUMP MAG LOWER RH
16	5219387	1	MNT, IH SELF DUMP MAG LOWER LH
17	5219391	1	MNT, IH SELF DUMP MAG UPPER RH
18	523476	1	MOUNT, ACTUATOR MAGNET IH
19	5219389	2	SPACER, IH SELF DUMP MAGNET
20	24139	1	ACTUATOR, 6", 12V, BALL SCREW

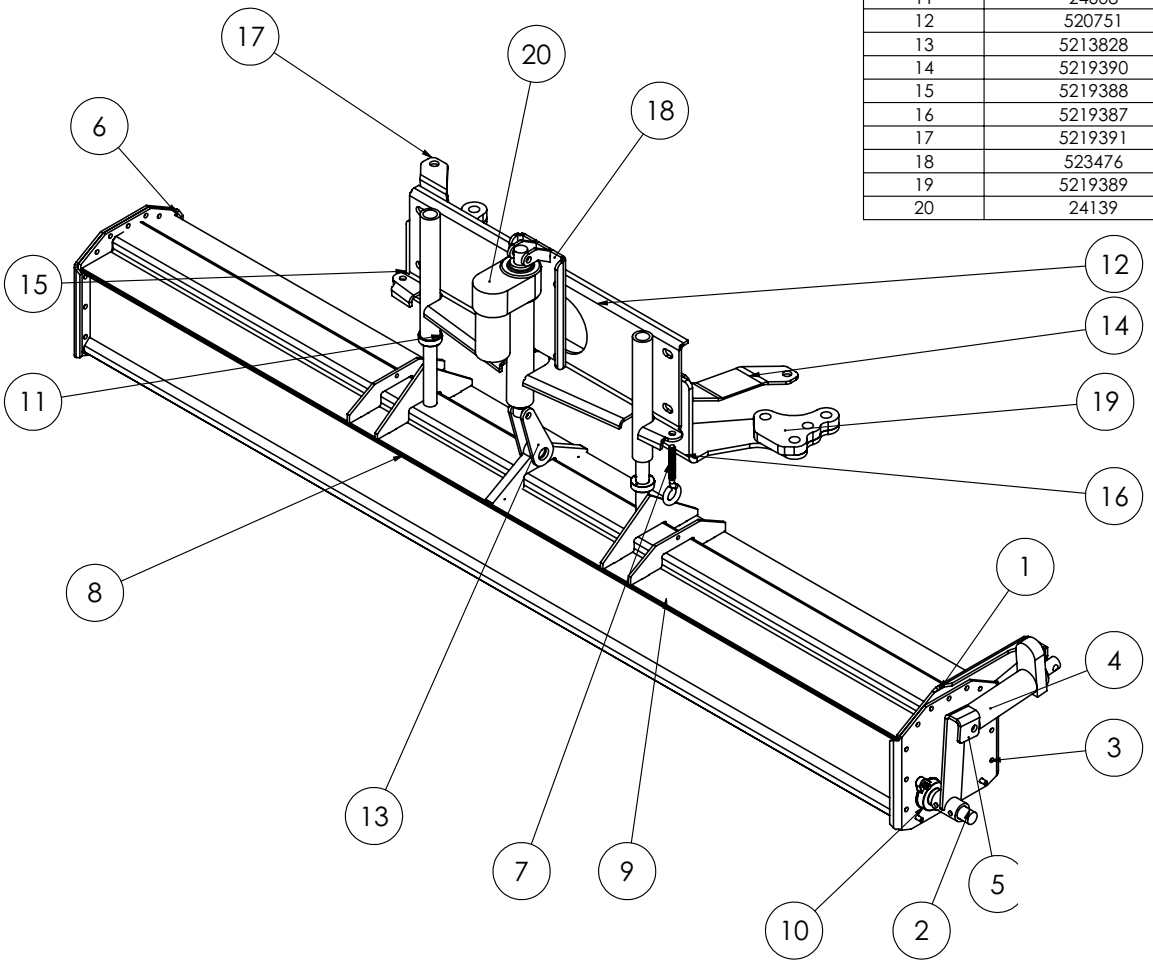

204D68 - SELF DUMP MAGNET, IH

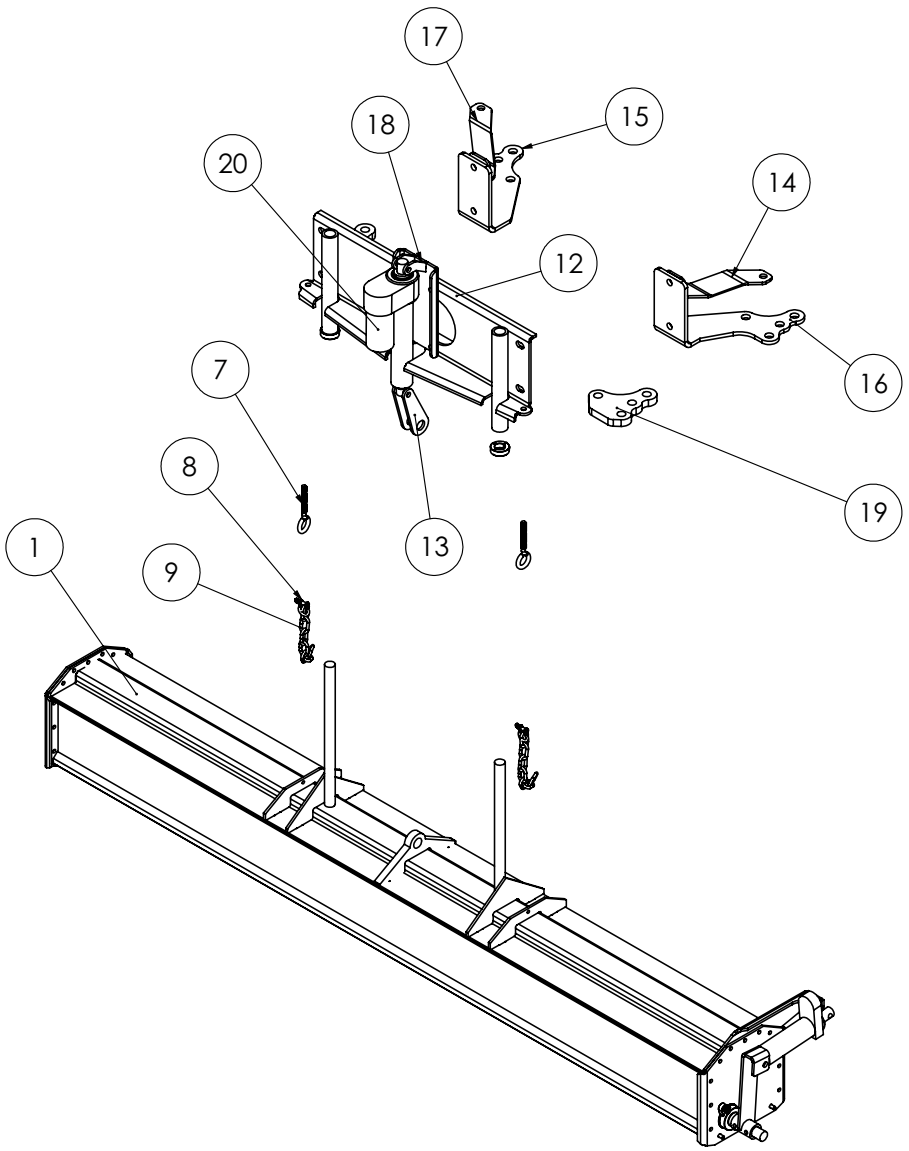

204A37 - BAR MAGNET MOUNT 90” IH

ITEM NO.	PART NUMBER	QTY.	DESCRIPTION
1	203Z84	1	ASSY, 90" BAR MAGNET
2	5217225	2	HANGER,BKT,B-MAG,A7-08
3	5217653	1	BKT,MTG,LH,B-MAG,IH-08
4	5217654	1	BKT,MTG,RH,B-MAG,IH-08

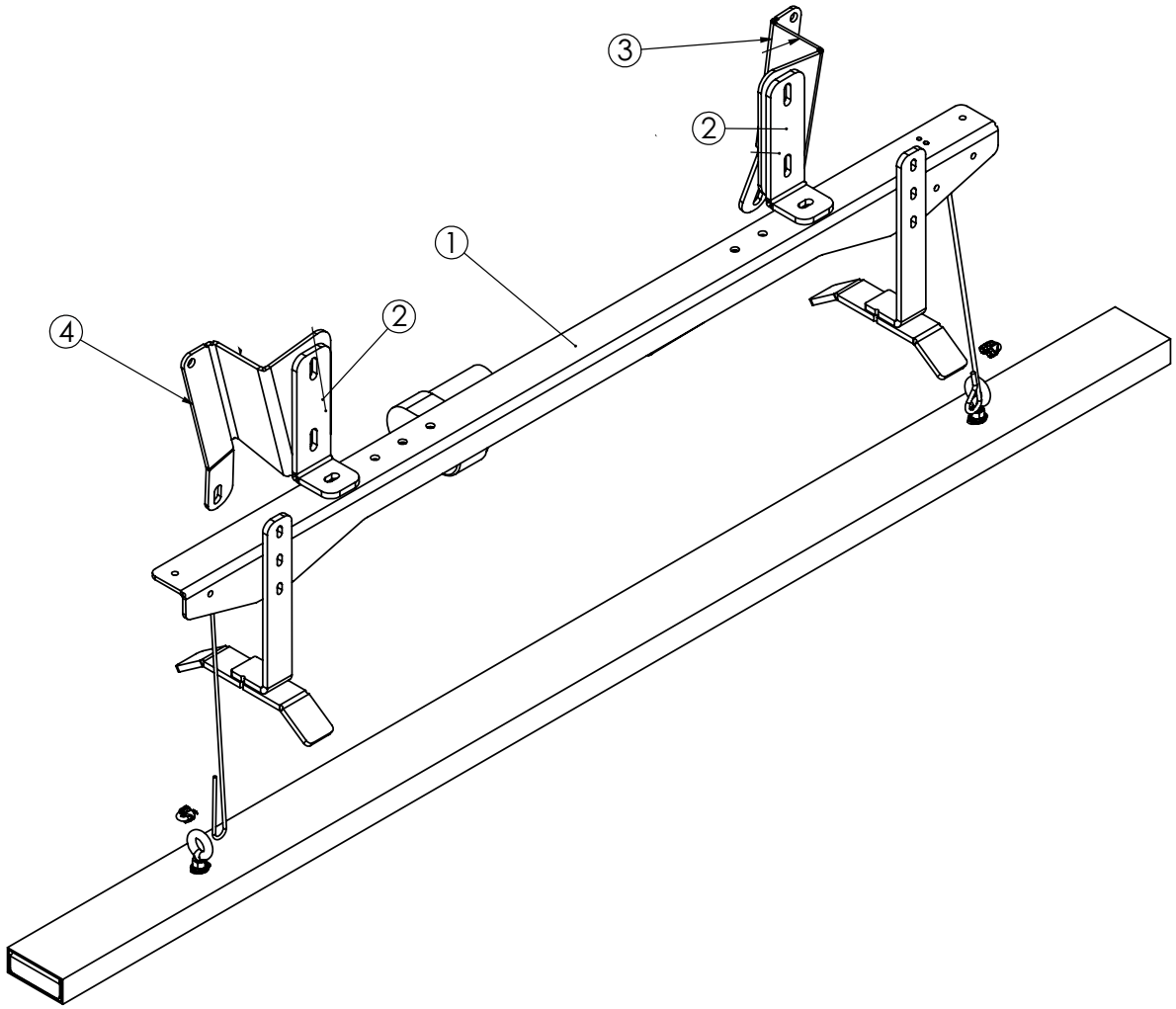

203O02 - A-SER, BATT-BOX KIT T-7500

ITEM NO.	PART NUMBER	QTY.	DESCRIPTION
1	522924	1	WELD,BATT BOX,IH-08
2	5214227	1	TOP, BATTERY BOX
3	6501802	1	BRKT, RH BATTERY BOX MNT, CHAS
4	6501803	1	RH BATTERY BOX MNT, CHASSIS
5	21550-24	2	C-STYLE TRIM LOC
6	23132	1	LATCH, RUBBER HOOD (NOT SHOWN)
7	5217588	1	TIEDOWN,BATTERY, IH, -08

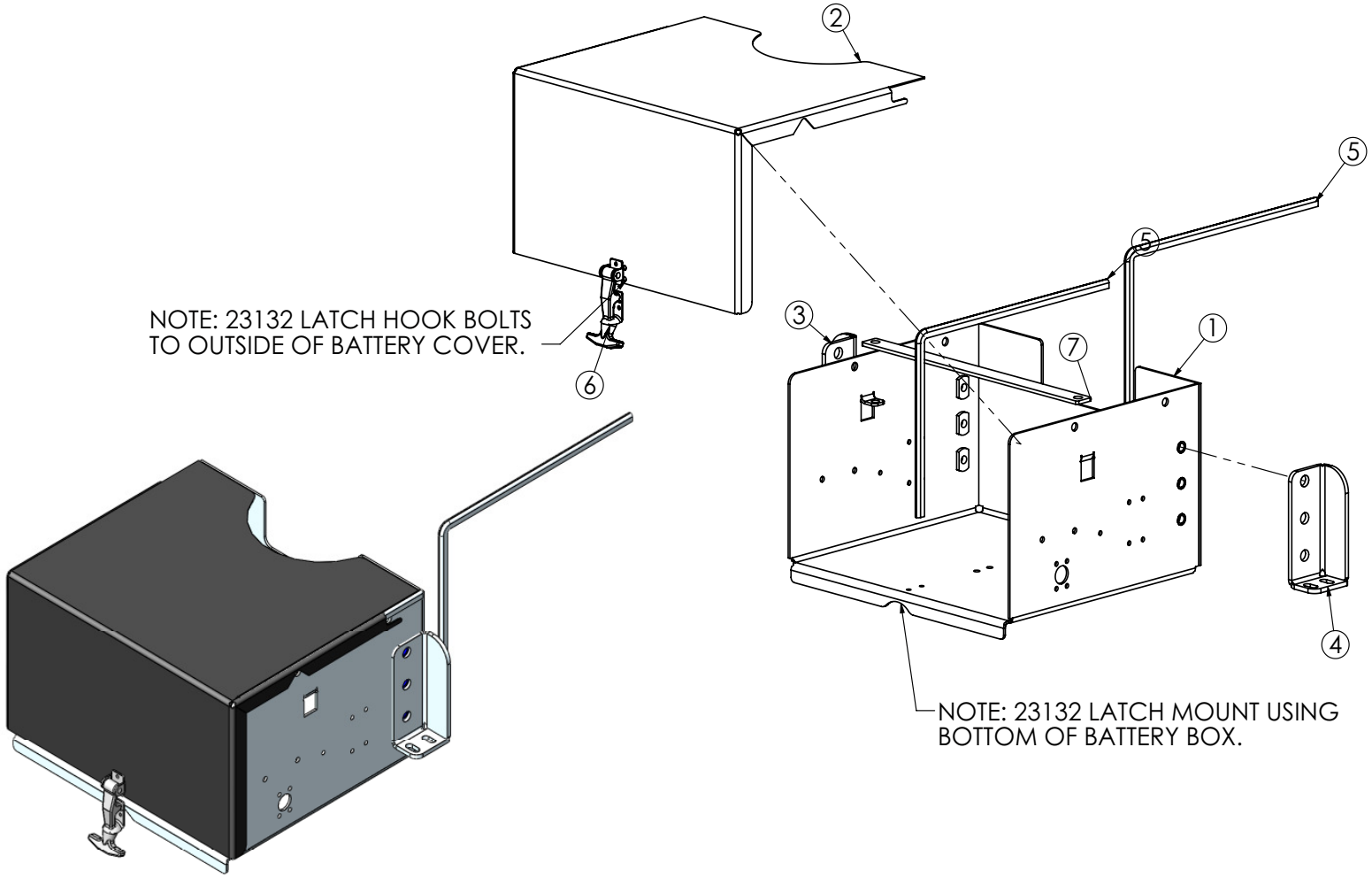

203N37 - CENTER DEFLECTOR

ITEM NO.	PART NUMBER	DESCRIPTION	QTY.
1	523147	WELD, MOUNT, CENTR-DEFLECR	1
2	5214980	CLAMP, ANGLE, DEFLECTOR CURTAI	1
3	29367	FLAP, CENTER DEFLECTOR	1

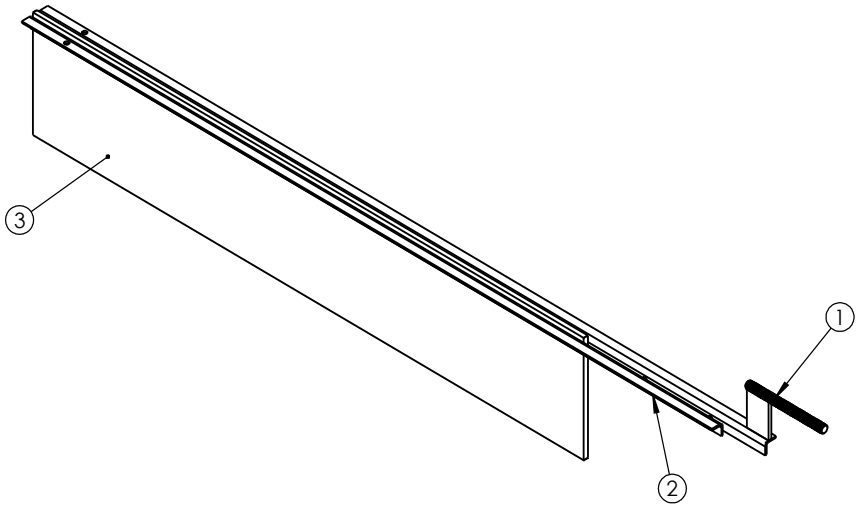

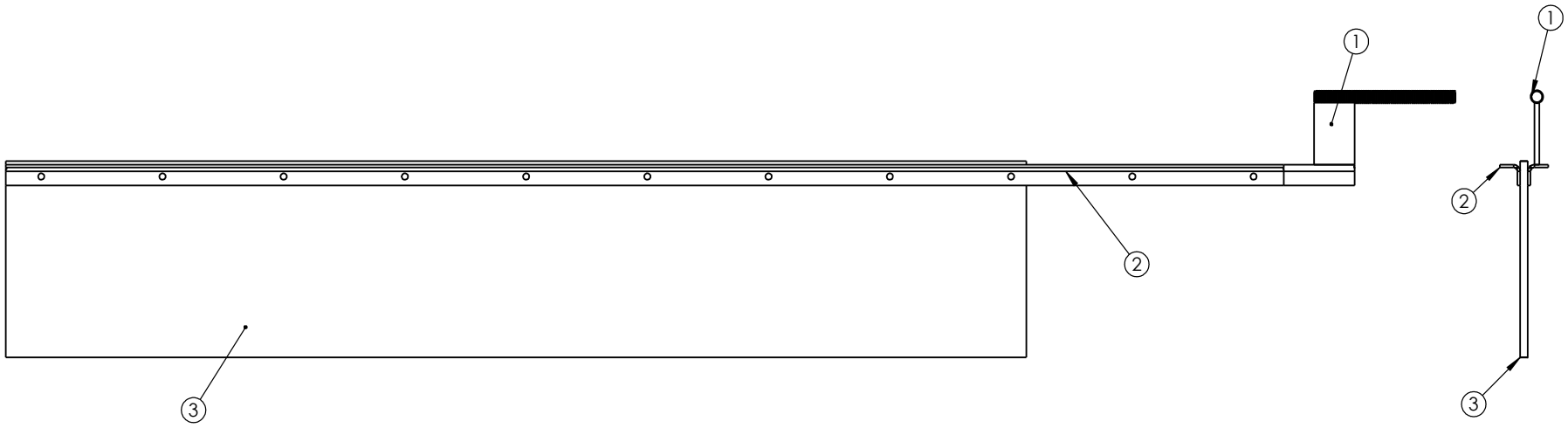

204A33 - FUEL TANK M2

ITEM NO.	PART NUMBER	DESCRIPTION	QTY.
1	28902	TANK,56 GAL DIESEL FUEL	1
2	21349	BUSHING,3/8 MNPT X 1/4 FNPT BRASS	1
3	20975	ELBOW, 3/8 " NPT STREET BRASS	2
4	20064	BARB,1/4 HOSE X 1/4 MNPT	1
5	20059	1/2" NYLON X 3/8 MPT CONN. AIR	1
6	20133	ELBOW,90,1/4 MNPT X FNPT	2
7	20136	BARB,5/16 HOSE X 1/4 MNPT	1
8	21344	BUSHING,1/2 MNPT X 3/8 FNPT BRASS	1
9	20057	5/8 TUBE X 3/8 MALE PIPE THREA	1
10	21342	REDUCER, 1/2 MNPT X 1/4 FNPT,BRASS	1

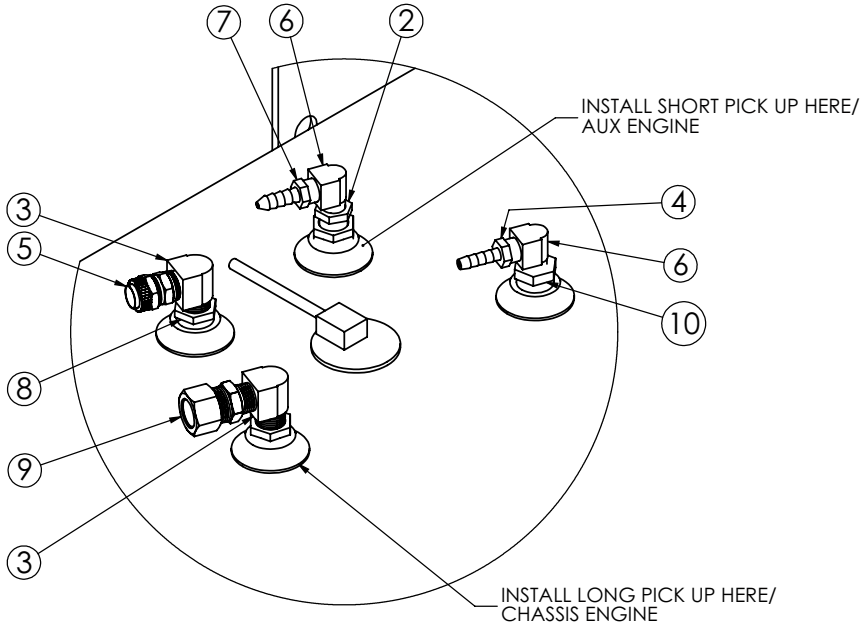

DETAIL B

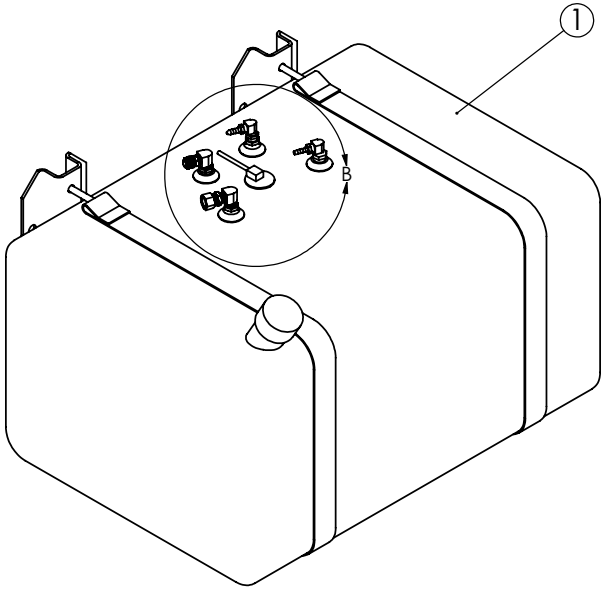

204L15- BAR MAGNET 90” MOUNT

ITEM NO.	PART NUMBER	QTY.	DESCRIPTION
1	203Z84	1	ASSY, 90" BAR MAGNET
2	300879	1	BRACKET LH, BAR MAG KENWORTH
3	300881	1	BRACKET RH, BAR MAG KENWORTH
4	300880	2	BRACKET, BAR MAG KENWORTH

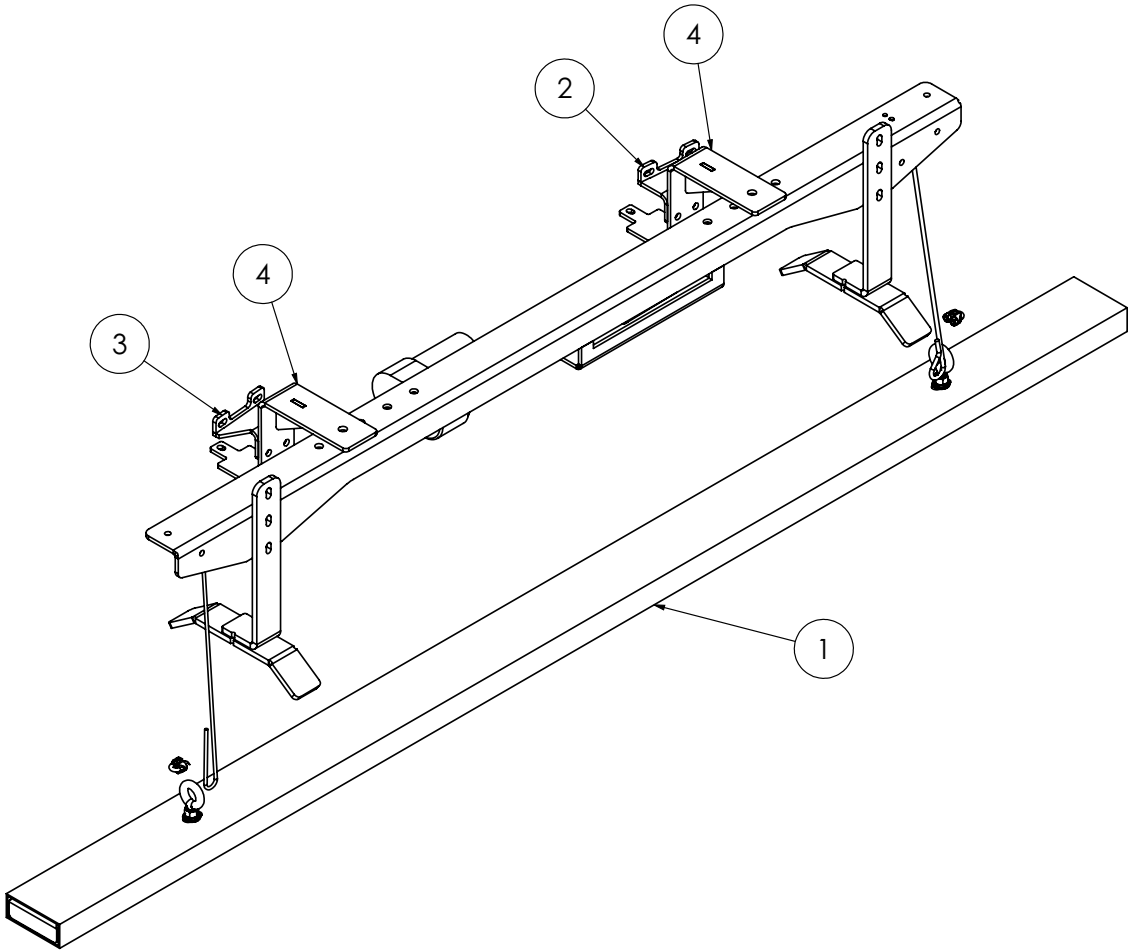

203U23 - LED BARLIGHT, IH

ITEM NO.	PART NUMBER	QTY.	DESCRIPTION
1	5218155	1	BRACKET, MINI LED BARLIGHT
2	61523	1	MINI LED BARLIGHT

ITEMS NOT SHOWN

ITEM NO.	PART NUMBER	QTY.	DESCRIPTION
3	20139	3	CLAMP, .50" RUBBER LINED
4	64806	1	FRONT LIGHT HARNESS
5	26211	3	CLIP, WIRE .313" - .406"
6	64595	1	CONNECTOR, 2WAY RECEPTACLE
7	64610	1	WEDGELOCK, DT, 2POS RECPT
8	62185	1	SEALED RELAY, DPST

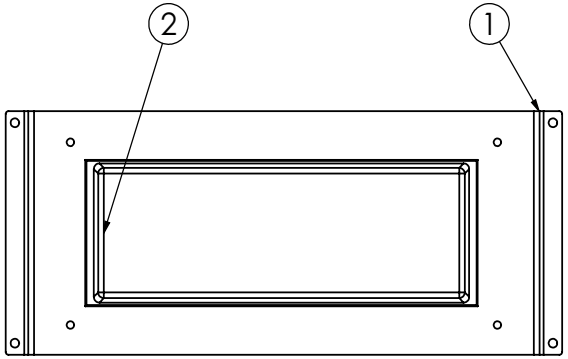

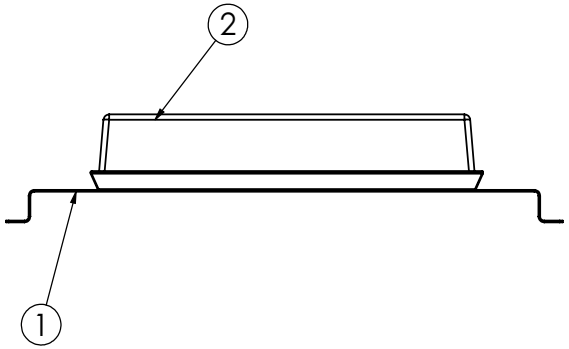

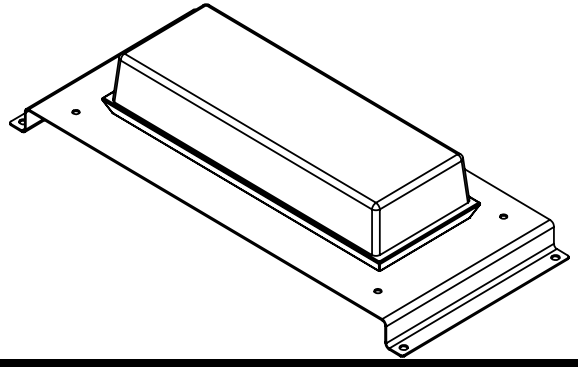

204A25 - BAR MAGNET MOUNT, COE

ITEM NO.	PART NUMBER	QTY.	DESCRIPTION
1	203Z84	1	ASSY, 90" BAR MAGNET
2	5218447	1	LH MAGNET MNT BKT, 16T
3	5218446	1	RH MAGNET MNT BKT, 16T

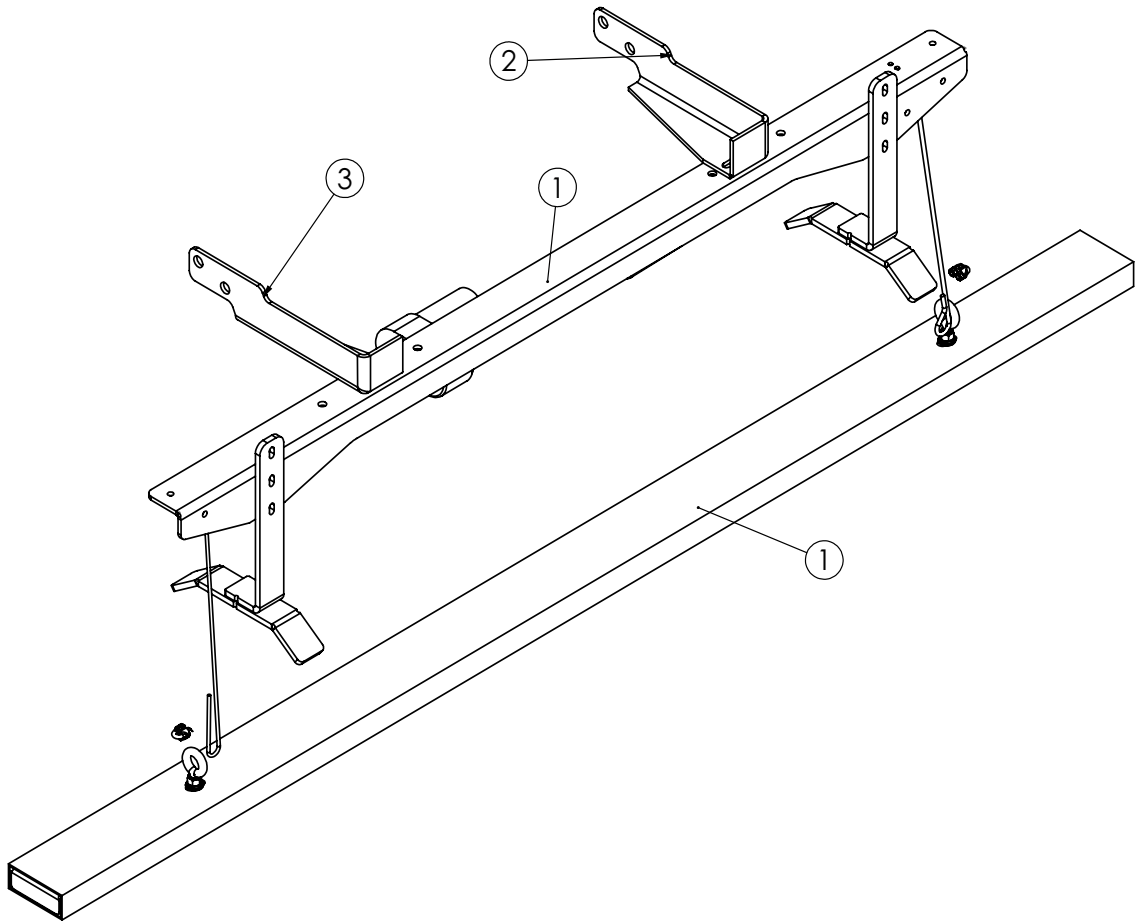

203Z75 - STROBE, COE

ITEM NO.	PART NUMBER	QTY.	DESCRIPTION
1	3000783	1	BEACON BRACKET, CAB MOUNT
2	61935	1	BEACON, LED, CLASS 1 AMBER
3	525716	1	LIMB GUARD, BEACON

ITEMS NOT SHOWN

ITEM NO.	PART NUMBER	QTY.	DESCRIPTION
4	20139	4	CLAMP, .50" RUBBER LINED
5	20529-8	1	TUBING, 3/8 NYLON X 96"
6	203429	1	CONSOLE KIT, STROBE/BEACN/BARL
7	21982	2	GROMMET, 5/16" RUBBER

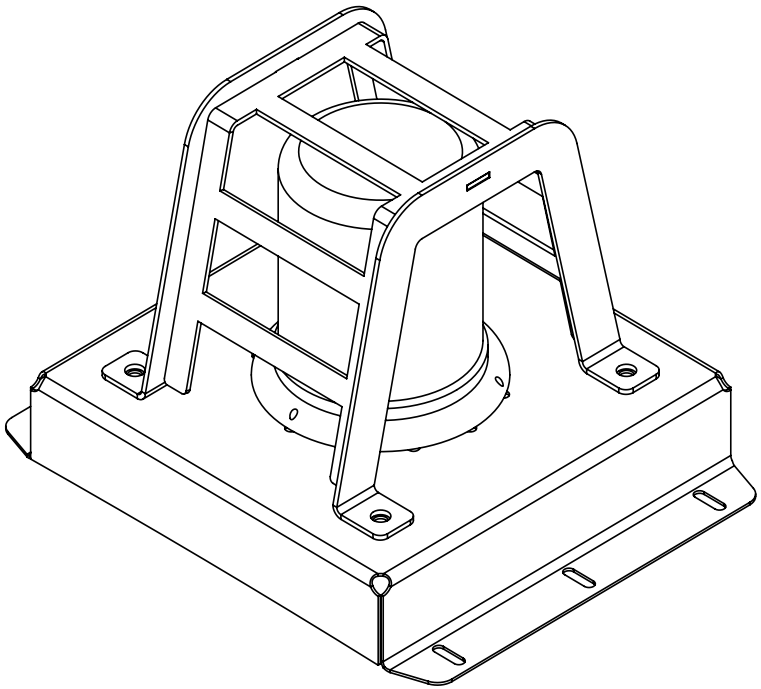

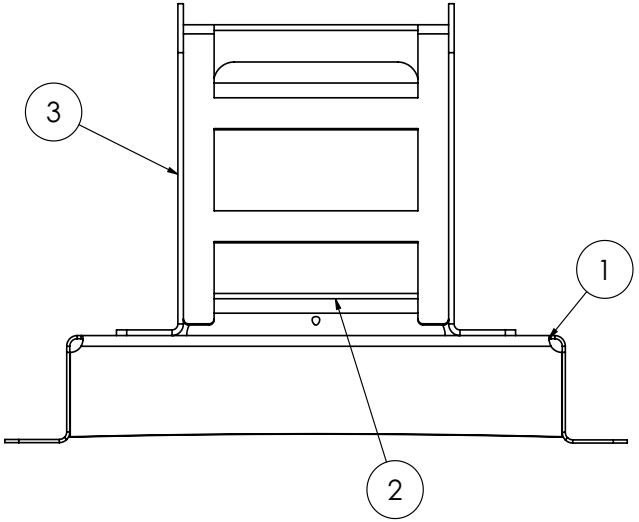

STOBE COE WITHOUT GUARD: 203Z72

204L36 - STROBE FRONT SHROUD

ITEM NO.	PART NUMBER	QTY.	DESCRIPTION
1	65913	1	500 V-SERIES WARNING LIGHT
2	65914	1	GROMMET MOUNT, WARNING LIGHT

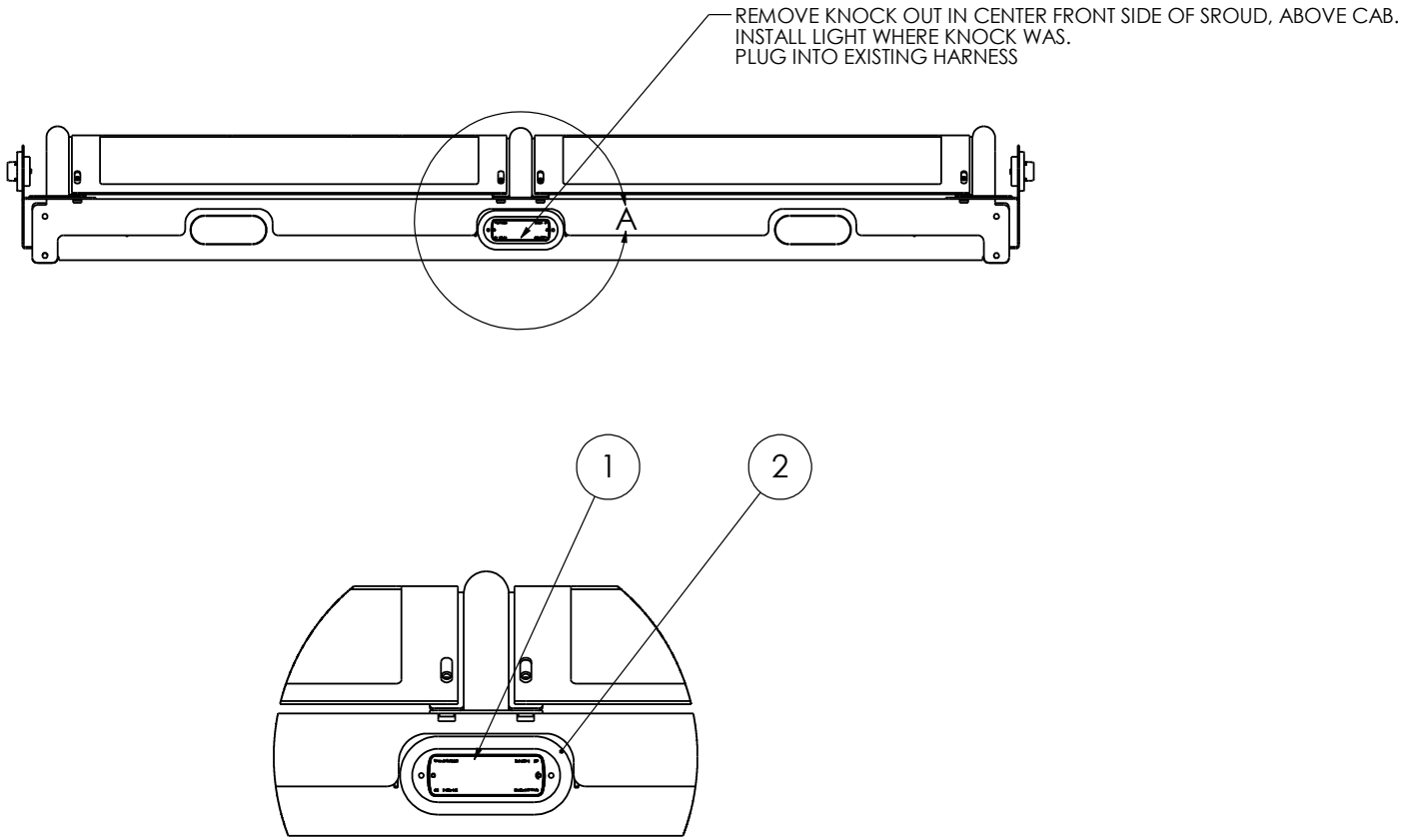

204J76 - BARLITE, PBILT

ITEM NO.	PART NUMBER	QTY.	DESCRIPTION
1	5221500	1	BKT,STROBE, PTR BT,MINI-LED,A7
2	61523	1	MINI LED BARLIGHT
3	524082	1	GUARD, MINI LED BARLIGHT

ITEMS NOT SHOWN

ITEM NO.	PART NUMBER	QTY.	DESCRIPTION
4	20139	3	CLAMP, .50" RUBBER LINED
5	20529-4	1	TUBING,3/8 NYLON AIR, 10 FEET

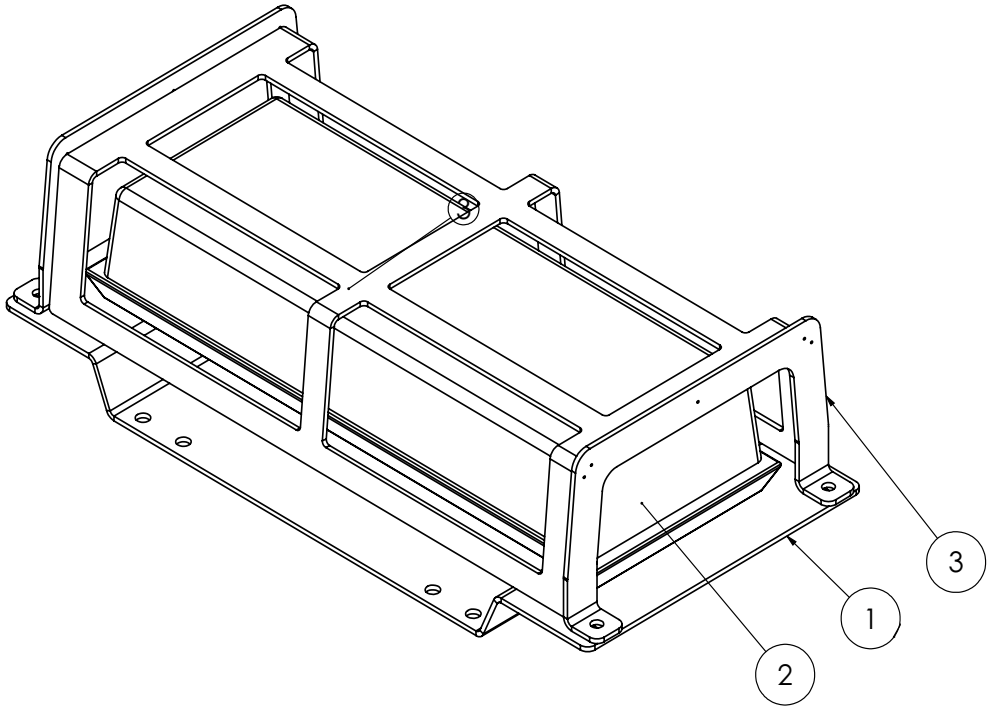

204L26 - WATER TANK SHIELD

ITEM NO.	PART NUMBER	QTY.	DESCRIPTION
1	3002388	1	GUARD, EXHAUST, KENWORTH
2	300882	4	WELD., EXHAUST GUARD BRACKET
3	31589	4	WASHER,1/4 FLAT
4	31604	4	WASHER,1/4 LOCK
5	30651	4	BOLT, 1/4-20X1.25

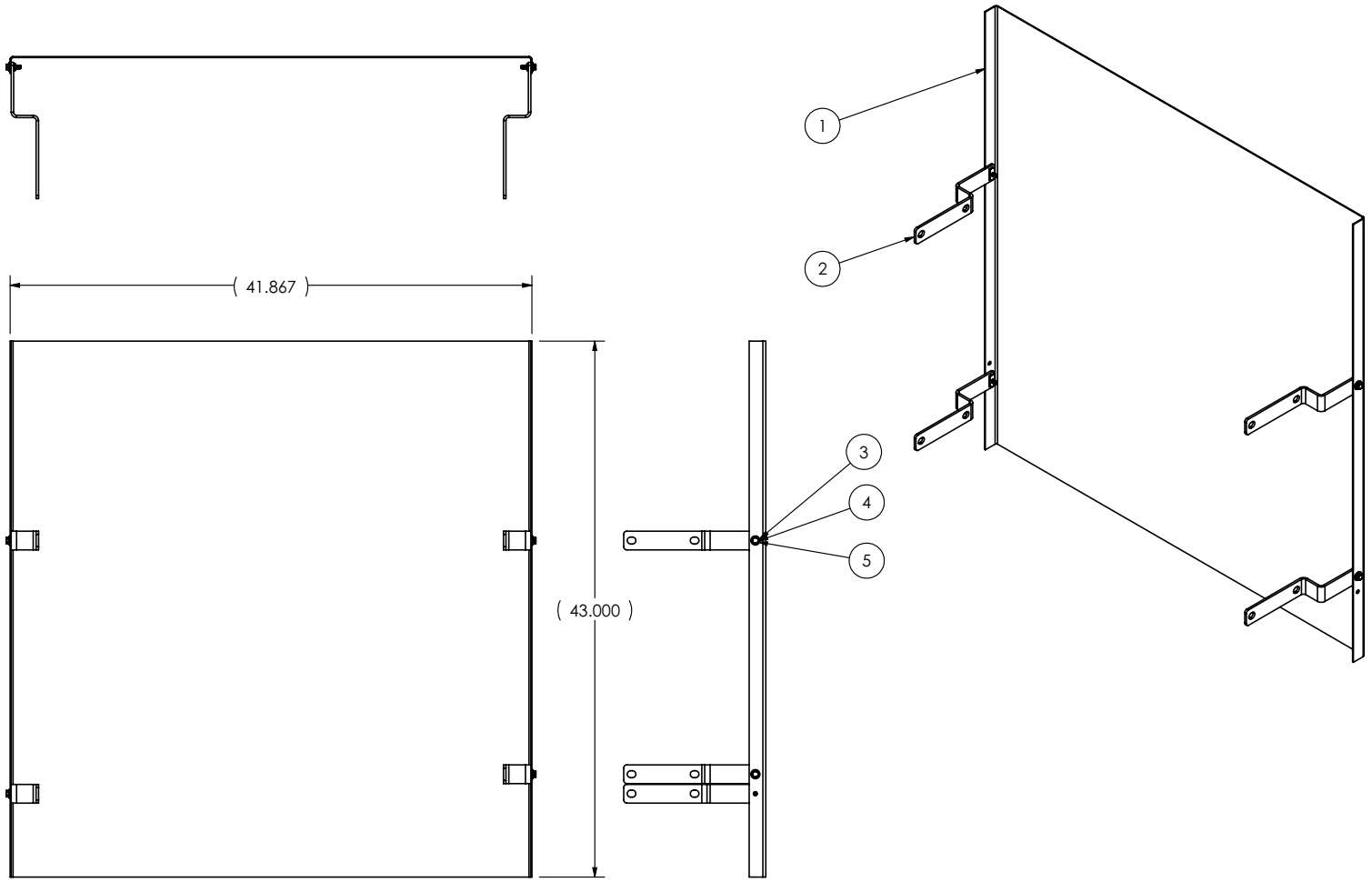

204S10 - TRUCK KIT, PB

ITEM NO.	PART NUMBER	QTY.	DESCRIPTION
1	523823	1	WELD DRAG LNK FRNT EXT RIGHT
2	523822	1	WELD DRAG LNK FRNT EXT LEFT
3	5221766	1	BRKT, LH TRANS CRSMBR, PB/KW
4	5221767	1	BRKT, RH TRANS CRSMBR, PB/KW
5	5223377	1	BRACKET,RELOCATION,FUEL FILTER
6	5223293	1	BRACKET, BATTERY CABLE
7	5221652	1	BACKING PLATE, PETERBILT GB A
8	5215917	2	BRACKET, SPRAY TIP
9	203N37	1	ASS'Y, CENTER DEFLECTOR
10	5216829	2	SPACER,MID,A-SER FRAME
11	5218164	2	SPACER, W/ T FRAME, FRONT UD
12	5218165	2	SPACER, W/ T FRAME, REAR UD
13	5218166	2	SPACER, SWEEPER FRAME, FRT UD
14	5218167	2	SPACER, SWEEPER FRAME, REAR UD
15	204Q84	1	TANK, FUEL, KW & PB
16	204Q37	1	INSTALL, DEF TANK A7, A8,A9
17	5222274	1	PLATE, CNTRL BOX BLKHD CVR
18	5222605	2	TIE DOWN, RH, A7T, SWB

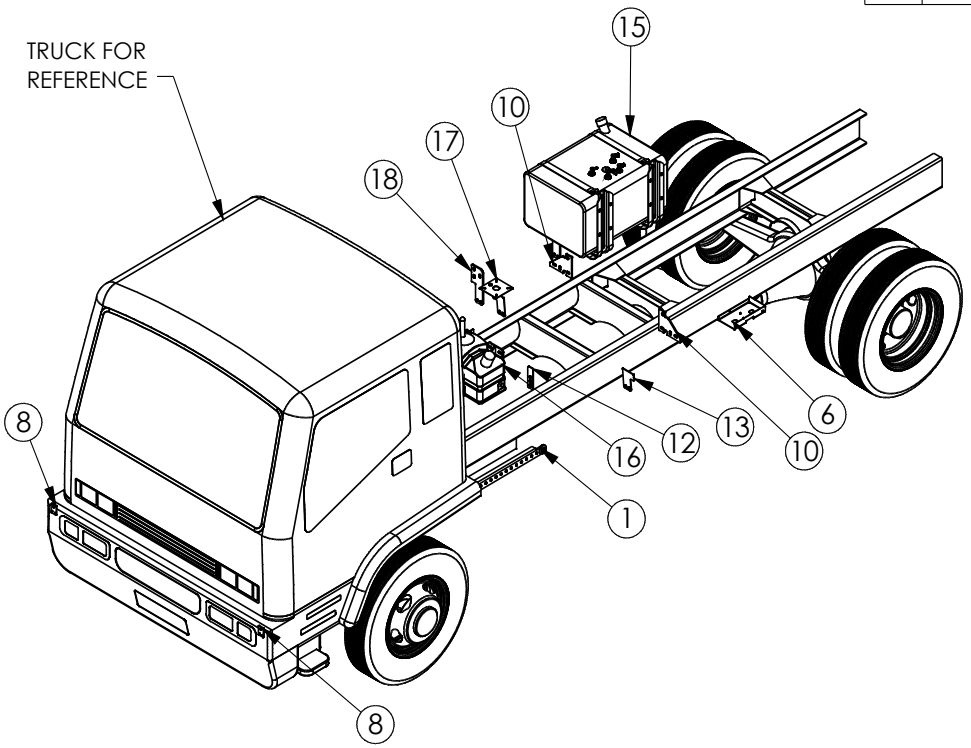

ITEMS NOT SHOWN

ITEM NO.	PART NUMBER	QTY.	DESCRIPTION
19	20146	1	3/8 HOSE X 1/8 MALE PIPE HOSE
20	20540	10 FT	HOSE, 3/8 FUEL PER FOOT
21	20534	8 FT	1/4" I.D. FUEL LINE
22	20541	36 FT	5/16 X 36 FUEL HOSE
23	20281	10 FT	FLEXGUARD, 250 - 1/4" X 20'
24	20150	4	HOSE CLAMP, #6
25	20135	1	BARB,5/16 HOSE X 1/8 MNPT
26	20131	1	COUPLING,1/8 NPT BRASS
27	20312	10 FT	WIRE, 14 GA
28	20883	4	CONNECTOR, MALE SINGLE
29	29885	3	CABLE, BATTERY 8 1/2 LONG
30	50327	1	CABLE, BATTERY 6 1/2 LONG
31	522185	1	CABLE, BATTERY 3' LONG 6 GA
32	20529	1	TUBING, 3/8 NYLON
33	22442	1	UNION, 3/8 AIRBRAKE, BRASS
34	20054	1	UNION, 5/8 AIRBRAKE
35	21343	1	REDUCER BRASS 1/2NPT - 1/8 NPT
36	21342	1	REDUCER, 1/2 MNPT X 1/4 FNPT,BRASS
37	22572	1	CONNECTOR,1/4 NPT X 3/8 AIR BRAKE
38	21349	1	BUSHING,3/8 MNPT X 1/4 FNPT BR
39	20164	1	UNION, 1/2 COMPRESSION
40	20354	1	FIRE EXTINGUISHER, 5LB, ABC
41	25092	4	CLAMP, 2" COATED
42	20057	2	5/8 TUBE X 3/8 MALE PIPE THREA
43	20880	4	CONNECTOR, FEMALE - 6
44	63117	1	SENDER,FUEL, 16T
45	64533	1	BATTERY FEEDER STUD, RED
46	64534	1	BATTERY FEEDER STUD, BLK
47	65871	1	HARNESS, CNSL EXT, AUTOCAR, A7
48	60971	1	CABLE, CAMERA 32.8 FT
49	50448	1	LICENSE PLATE TAG
50	20314	10 FT	WIRE, 14 GA- ORANGE
51	SK-2415	1	SCHEMATIC, SWEEPER ELEC PWR
52	29878	14 FT	SHEATHING, 3" NYLON W/ VELCRO
53	65971	4 FT	THERMOSLEVE, 1-1/8" - 1-1/2"

PROPRIETARY AND CONFIDENTIAL

204S10 - TRUCK KIT, PB

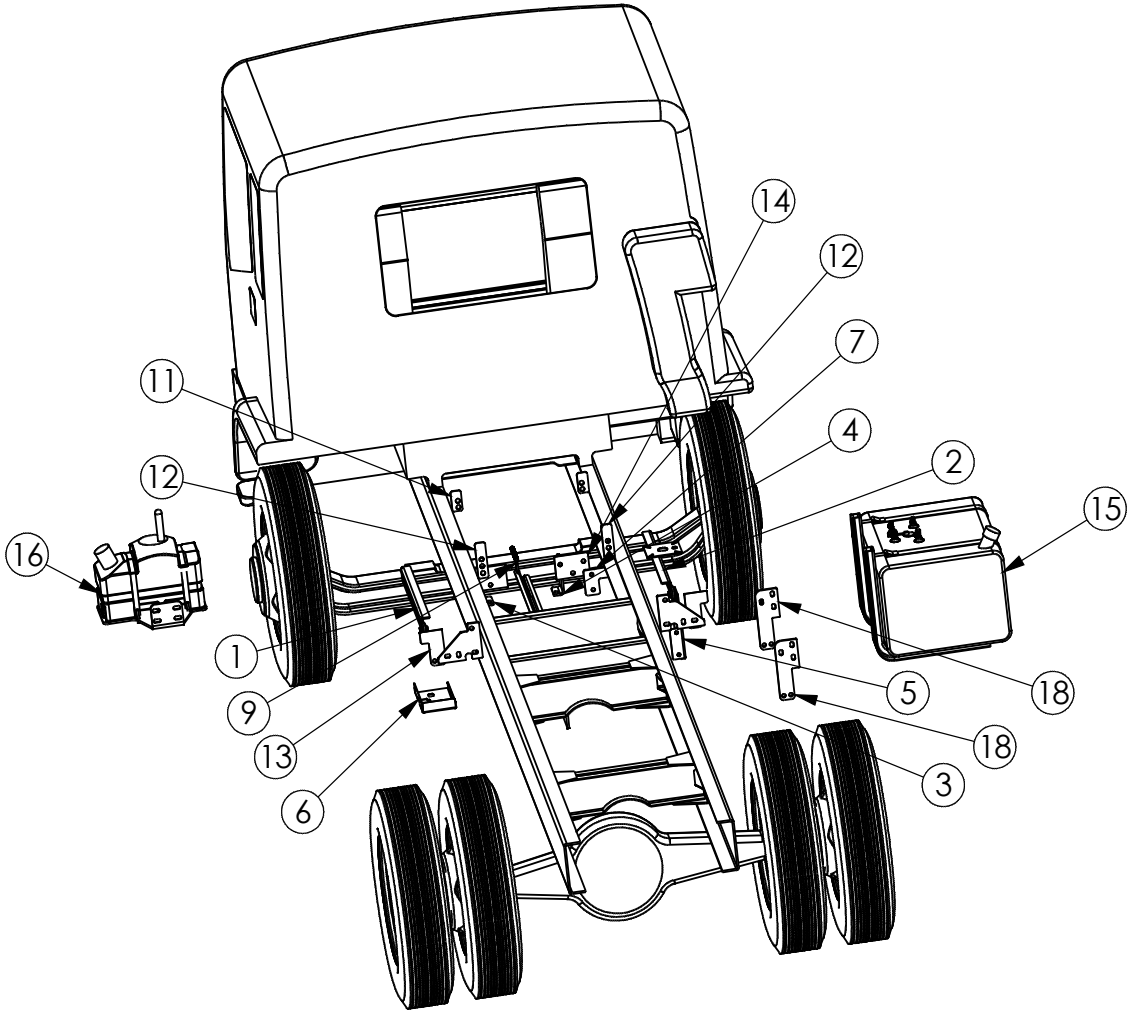

204P03 - SELF DUMP MAGNET, PB/KW

ITEM NO.	PART NUMBER	DESCRIPTION	QTY.
1	203X78	ASSY,REM-MAG,A7000-M2-10	1
2	750331	WLDMNT, BMPER BRKT, LH,PB 2015	1
3	750329	WLDMNT, BMPER BRKT, RH,PB 2015	1
4	651133	BUMPER WELD A7 PB/KW DUMP MAG	1
5	7501122	PLATE, LIGHT BRKT EXT.	2
6	7501044	LOWER BKT, LIGHT KIT, RP AC	2
7	7501125	UPPER BKT, LIGHT KIT, PETER 22	2
8	28194	PIN, SAFTEY SNAP .38 X 1.5"	2
9	59875	GROMMET, OVAL 6"	2
10	54209	LIGHT, 6.5" WIDE, AMBER, LED	2
11	525700	WELD,STNDOFF,SELF DMP,PB/KW	2
C 12	525764	BRKT LH BUMPER A7 PB/KW SD MAG	1
C 13	525765	BRKT RH BUMPER A7 PB/KW SD MAG	1

ITEMS BELOW NOT SHOWN

ITEM NO.	PART NUMBER	DESCRIPTION	QTY.
14	63347	HEAD LIGHT KIT, RP006	1
15	27232	SWITCH ACTUATOR, FLOOD LIGHTS	1
16	27268	SWITCH, DPDT O-F-O, ROCKER	1
17	27264	SWITCH CONNECTOR, CARLING	1
18	20743	BREAKER, 20 AMP	1
19	28731	PIGTAIL, RED, WHITE, AND BLACK	2

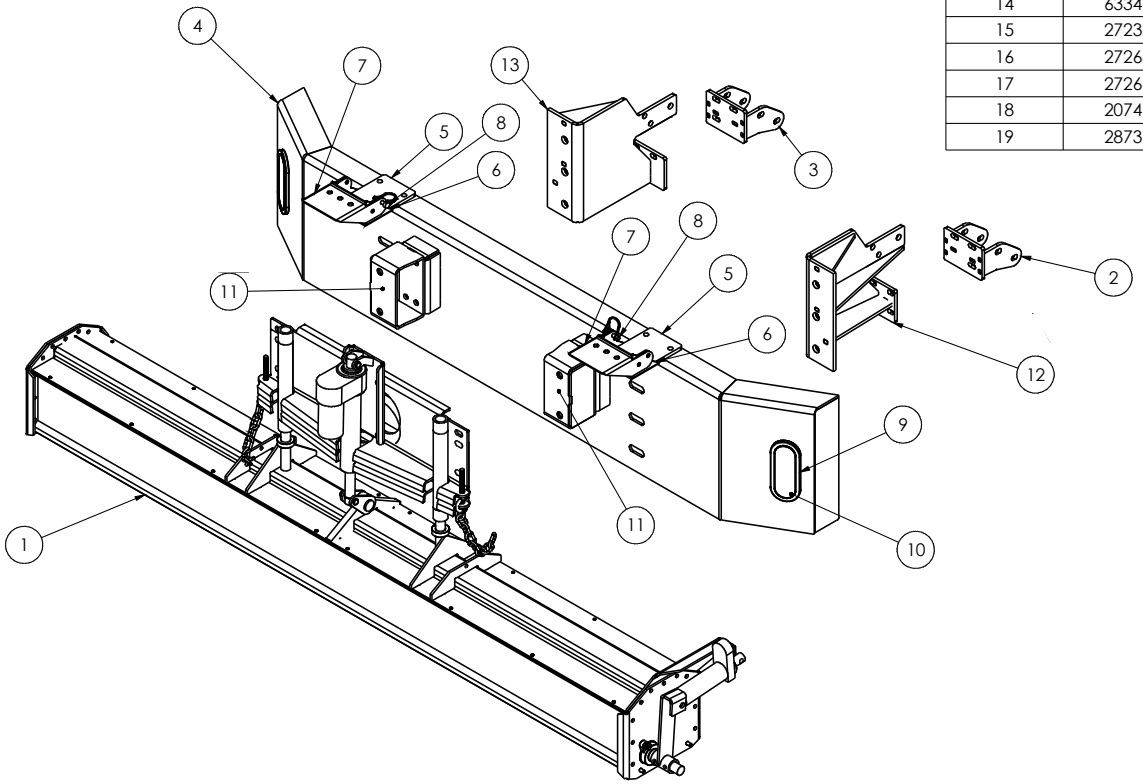

204T46 - ENGINE SCREENS TIER 4

ITEM NO.	PART NUMBER	QTY.	DESCRIPTION
1	525108	1	ENGINE SCREEN, RH WELD
2	525109	1	ENGINE SCREEN, LH WELD

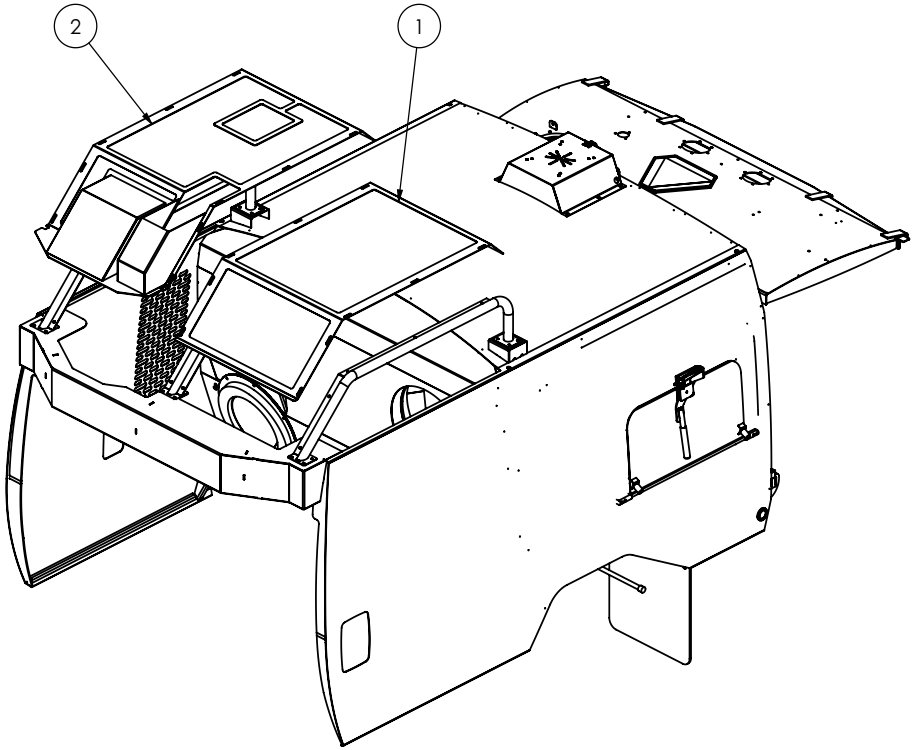

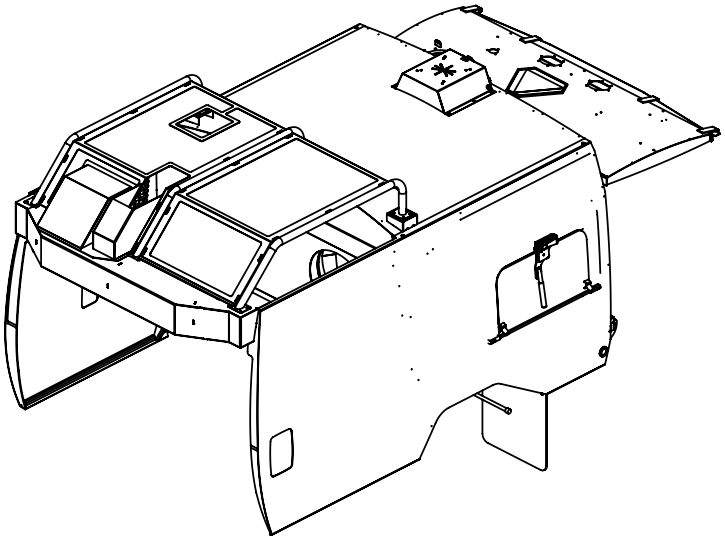

203064 - INDICATOR, AF RSTCT, IN CAB

ITEM NO.	PART NUMBER	QTY.	DESCRIPTION
1	29467	1	RESTRICTION INDICATOR, 15"
2	23541	2	CONNECTOR, 1/4 TUBE 1/8 MPT
3	20131	1	COUPLING,1/8 NPT BRASS
4	21125	1	NIPPLE,1/8 NPT HEX BRASS

ITEMS BELOW NOT SHOWN

ITEM NO.	PART NUMBER	QTY.	DESCRIPTION
5	22623	1	TUBING, 1/4 NYLON

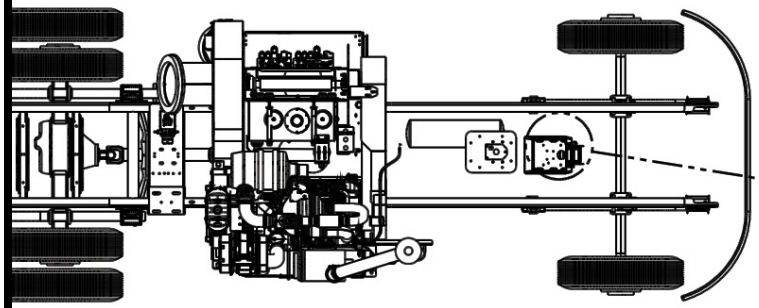

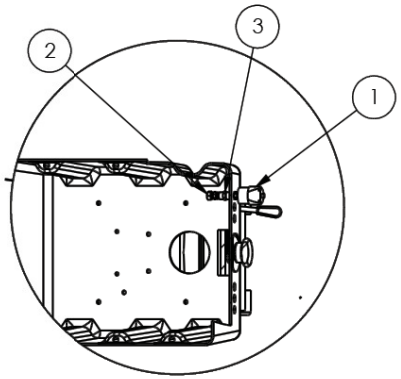

DETAIL A

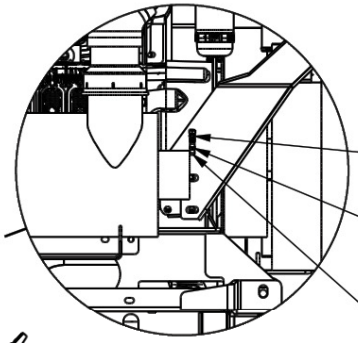

DETAIL B

FITTINGS MOUNT IN THE FACTORY
HOLE RESTRICTION INDICATOR HOLE

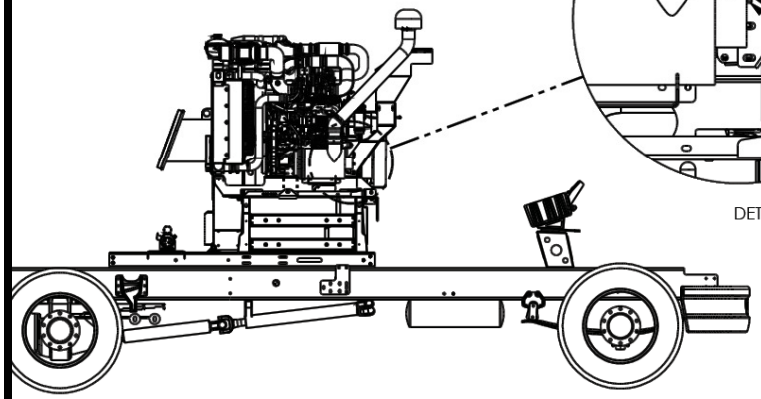

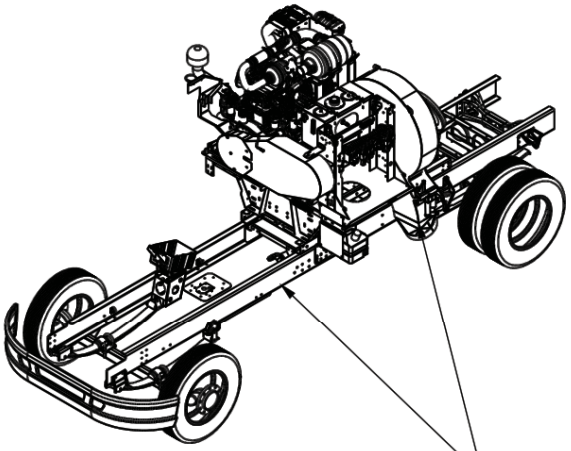

FRAME AND POWER MOD SHOWN FOR REFERENCE

204T47 - ENGINE SCREENS TIER 3

ITEM NO.	PART NUMBER	QTY.	DESCRIPTION
1	525704	1	ENG SCREEN WELD, T3, RH
2	525703	1	ENG SCREEN, WELD, T3, LH

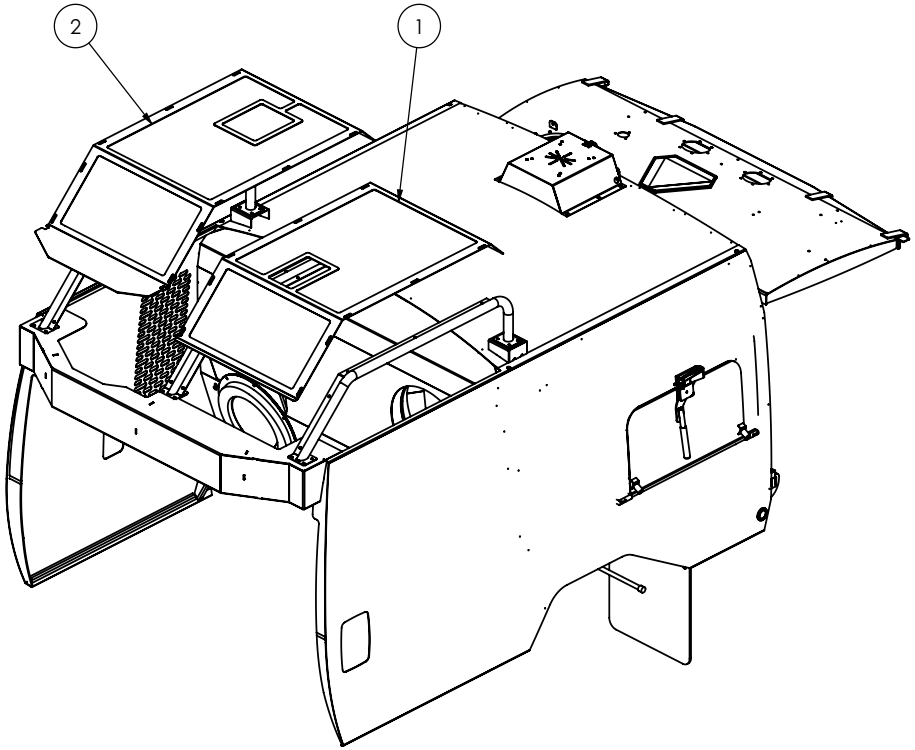

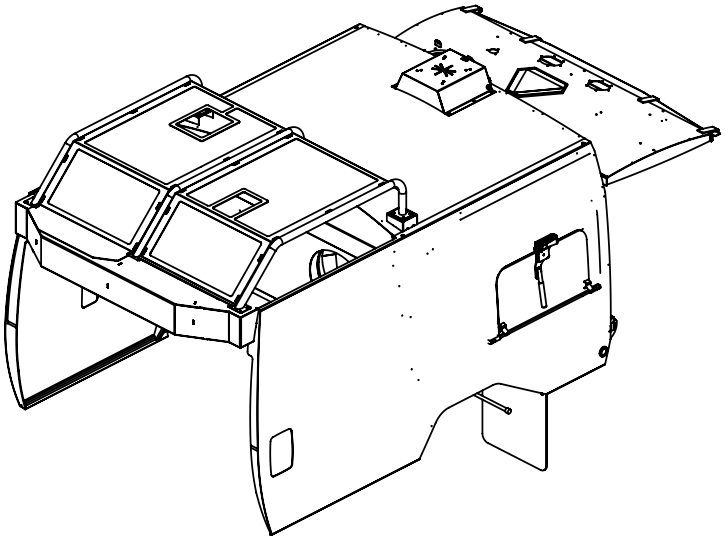

MISCELLANEOUS

ITEM	DESCRIPTION
+5219621	BKT DRAG ARM LH AUTOCAR
+204P97	33” GB DISC, A-SERIES
+204P98	36” GB DISC, A-SERIES
+203662	GUTTER BROOM, POLY SEGMENT, EA
+203S79	BROOM, STEEL 5 SEGMENT
+204M20	SPACER, LH GUTTERBROOM
+204M22	SPACER, LH G/B AUTOCAR
+204M21	SPACER, RH GUTTERBROOM
+204M23	SPACER, RH G/B AUTOCAR
+203C12	G/B,3IN EXT. DUAL,A7,A8,A9
+204G63	SPACERS G/B DUAL AUTOCAR
+525150	LEFT REAR STEP SUPPORT, M2
+525523	WLD,LH REAR STEP SPRT,M2 SHRT
+525461	WLD,RH REAR STEP SPRT, M2 SHRT
+525149	RIGHT REAR STEP SUPPORT, M2
+204Q70	AUTOLUBE, SWEEPER, A7/A9
+203842	AUTOLUBE SYSTEM (VOGEL)
+203B25	AUTOLUBE FILL KIT
+204N30	REMOTE GREASE FITTINGS 10 PTS
+203G87	AUTOLUBE, VOGEL, A7, SWP ONLY
+204N36	NYDOT A7 SPECIAL KIT
+204R11	LEAK INSPECTION KIT
+204H59	SS, DELUGE COVER PLATE
+204H60	SS, DRAIN COVER PLATE
+203C25	SS HOPPER DRAIN 6”, A9
+204H61	SS, HAND HOSE COVER PLATE
+204J54	PENDANT CONTROL W/ DISCONNECT
+203956	DUMP DOOR REFLECTOR
+29256	KIT, HOPPER WATER SYSTEM A7 A9
+204W53	KIT, HOSE A9T DUMP DOOR ORFS
+204M28	KIT, HOSE, A9 DUMP DOOR, ORFS
+29188	KIT, A9 DUMP DOOR
+204N56	REAR BUMPER A7T/A9T LED
+203U39	A9 DECAL KIT

ITEM	DESCRIPTION
+204T01	BK FLSH HOSE AND FLUIDS
+204T27	INSTALL, FAN WHEEL, A7-A8
+203U22	BARLIGHT, REAR, LED
+203Z71	STROBE, REAR, LED
+203V45	FLOOD LIGHT KIT, LED
+203Z73	STROBE, REAR, DUAL, LED
+203P88	LED ARROWBOARD 30 X 60
+204B50	STROBE, CONV. CAB, LED
+204H57	DUAL STROBE CAB MNT W/GUARD M2
+203E37	STRAP 150 GAL WATER TANK
+204W93	356G WTR TNK HEAT SHLD
+203616	MIRROR, 12” PARABOLIC, SET
+204P91	MIRROR 8”, CONVEX, SET
+204H97	SEAT, AIR RIDE, ARM REST M2
+203X81	CAMERA SYSTEM, HD, SINGLE
+523922	WLD,BKT,LH, RUN-BRD, M2-T3
+523923	WELD, BKT, RH, RUN-BRD, M2
+524008	WLD,BKT,FT,LH, R-B, M2-T3
+524009	WLD, BKT,FT,RH, R-B, M2-T3
+203X82	CAMERA SYSTEM, HD, DUAL
+203Z99	CAMERA SYSTEM, HD, 3
+203018	AIR DRYER, BENDIX AD9
+204P54	CAMERA SYSTEM, HD, 4
+203468	TIRE & RIM, SPARE, STERLING
+203620	RIM, SPARE, STERLING
+204S04	TRUCK KIT, IH, A9T
+203B29	SEAT, AIR RIDE, CLOTH
+203798	SEAT, AIR RIDE HIBACK, FL70
+203461	SEAT, SUSPENSION HIBACK
+204A30	SEAT, AIR RIDE, IH M7
+204F70	SEAT, AIR RIDE HIBACK, DRIVER
+203C55	SEAT, AIR RIDE HIBACK, PASSNGR
+523834	RUNNING BOARD, CAB RH
+523835	RUNNING BOARD, CAB LH

MISCELLANEOUS

ITEM	DESCRIPTION
+5214540	STEP BKT PLATE IH
+5214541	STEP BKT PLATE IH
+203037	TOW HOOK KIT, IH
+203476	TIRE & RIM, SPARE, IH
+203478	RIM, SPARE, IH
+203C53	AIR HORN, CHASSIS
+65093	DUAL STEER IH 4300
+204S05	TRUCK KIT, AUTOCAR, A9T
+21737	HORN,AIR STERLING CHASSIS
+66504	INSTALL, HOUR METER, PETERBILT
+203467	GUAGE, TRANSMISSION TEMP
+203X83	TIRE & RIM, SPARE
+204G65	SEAT, AIR RIDE HIBACK, AUTOCAR
+203Z72	STROBE, CAB, COE, LED
+204B09	MINI LED BARLIGHT, CAB, A-SRS
+204S08	TRUCK KIT, KENW, A7T A9T, 2018
+204Q16	TRUCK KIT, PETE A7T A9T
+204Q17	TRUCK KIT,KENWORTH 370 A7T A9T
+204Q02	HEATER BLOCK, JD T4F
+203528	HYD FILT GAUGE IND. IN CAB
+204M04	HYD. RESTRICTION IND. A7T/A8T
+203689	ADDITIONAL MANUAL, SWEEPER
+204E44	DECAL KIT, A9 MONSOON

Power Module

6

204K91 - GB POWER TILT LH

ITEM NO.	PART NUMBER	QTY.	DESCRIPTION
1	29707	1	VALVE ASSY, GUTTER BROOM TILT
2	61028	3	ELBOW, 90 1/4 MORFS X 1/4 MORB
3	61030	3	1/4" MORFS X 1/4" MORB
4	61021	1	1/2" TEE MORFS X FORFS X MORF
5	63428	1	CYLINDER, 1 1/2 X 3 3/4 HYD.
6	61051	1	ADAPTER, 1/2 FORFS X 1/4 MORFS

D **HOSES NOT SHOWN**

ITEM NO.	PART NUMBER	QTY.	DESCRIPTION
7	524986	1	HOSE LH TLT MN C1 TO LH TLT C
8	524987	1	HOSE LH TLT MN C2 TO LH TLT C
9	524988	1	HOSE FR MN A3 T TO LH TLT MN
10	524985	1	HOSE JPR TLT MN T TO TLT MN T

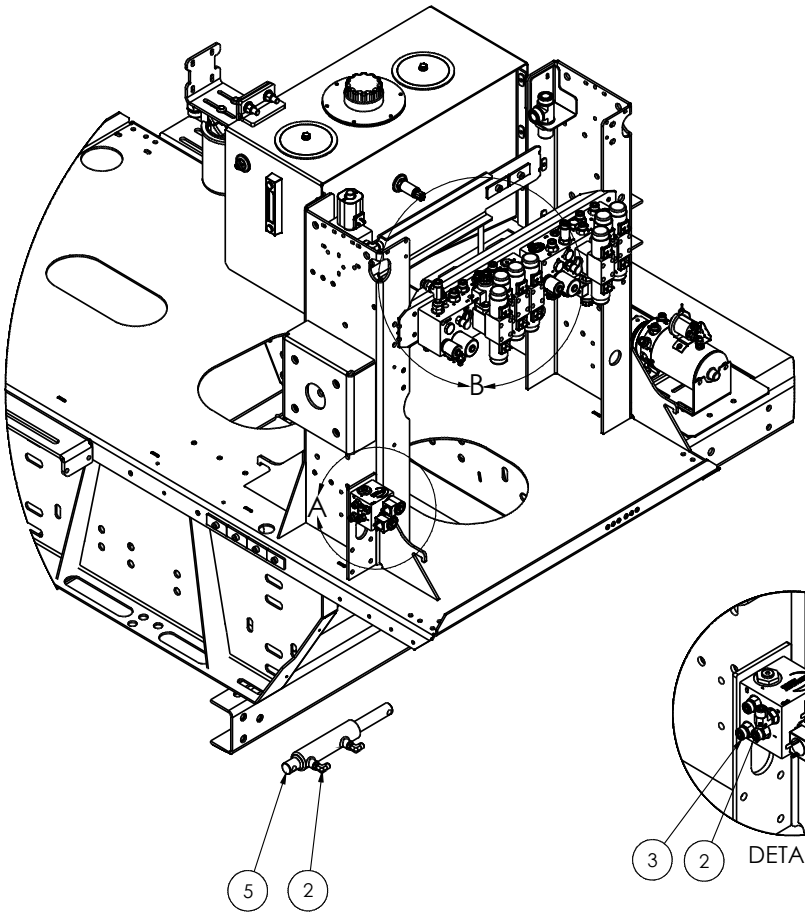

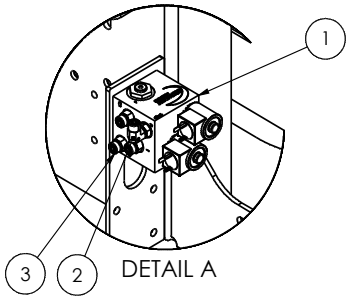

DETAIL A

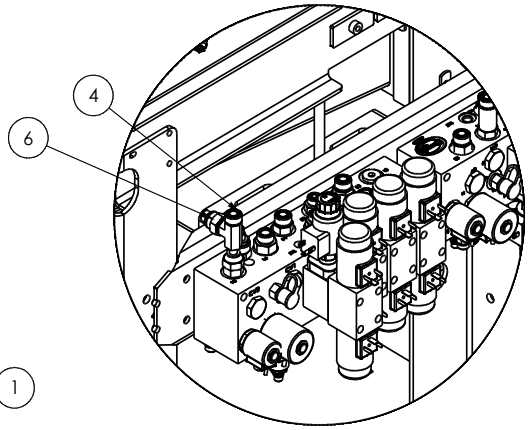

DETAIL B

204K92 - GB POWER TILT RH

	ITEM NO.	PART NUMBER	DESCRIPTION	QTY.
	1	29707	VALVE ASSY, GUTTER BROOM TILT	1
	2	61028	ELBOW, 90 1/4 MORFS X 1/4 MORB	3
	3	61030	1/4" MORFS X 1/4" MORB	3
	4	61021	1/2" TEE MORFS X FORFS X MORF	1
	5	63428	CYLINDER, 1 1/2 X 3 3/4 HYD.	1
	6	61051	ADAPTER, 1/2 FORFS X 1/4 MORFS	1
*	7	524989	HOSE, RH TLT MN C1 TO RH TLT C	1
*	8	524990	HOSE, RH TLT MN C1 TO RH TLT C	1
*	9	524991	HOSE, RR MN A3 T TO RH TLT MN	1
*	10	524965	HOSE, TITL MAN TO FR MAN	1

* PARTS NOT SHOWN

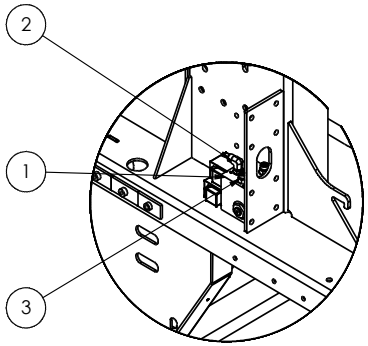

DETAIL B

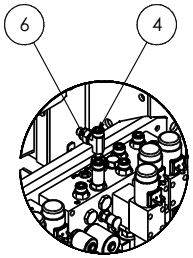

DETAIL C

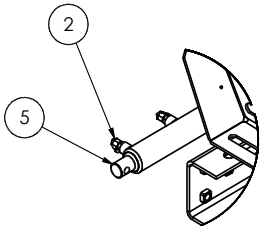

DETAIL D

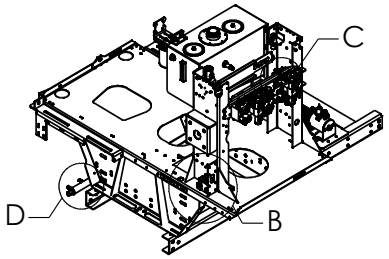

204T80 - ENGINE BAY THROTTLE SWITCH

ITEM NO.	PART NUMBER	DESCRIPTION	QTY.
1	5223704	BRACKET, THROTTLE SWITCH	1
2	62920	CARL, MOM-OFF-MOM, FLUSH BKT	1
3	63212	SWITCH ACTUATOR, FAST/SLOW	1

REMOTE THROTTLE SWITCH			
TERMINAL	WIRE GAUGE	WIRE COLOR	WIRE LABEL
1	18	BROWN/BLACK	THROTTLE DOWN
2	18	RED	12V SENSOR POWER
3	18	TAN	THROTTLE UP
4	-	-	-
5	-	-	-
6	-	-	-
7	18	BLACK	GROUND
8	18	RED	12V SENSOR POWER

REF: SK-2439

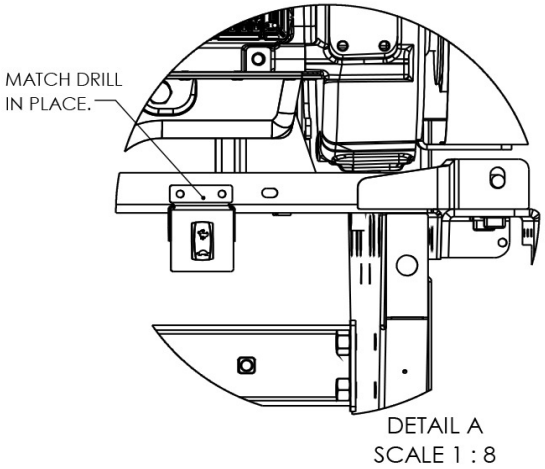

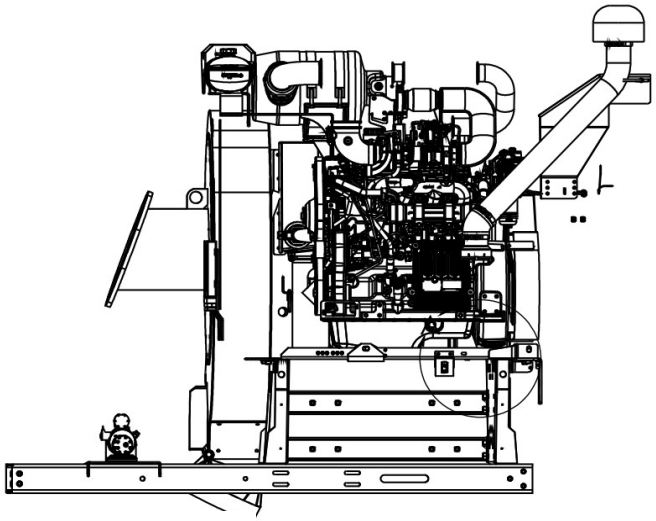

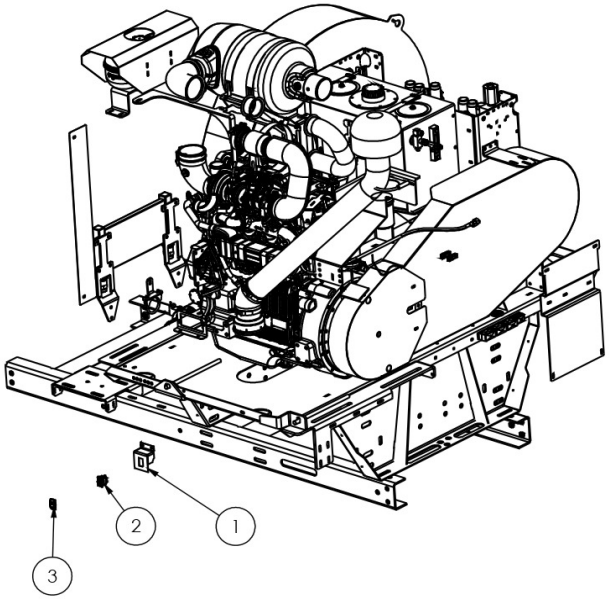

204M29 - SEQUENCE DOOR VALVE

ITEM NO.	PART NUMBER	DESCRIPTION	QTY.
1	25186	MANIFOLD & CART, A7,A9	1
2	61027	ELBOW, 90 3/8 MORFS X 3/8 MORB	1
3	61043	3/8" MORFS X 1/2" MORB	2

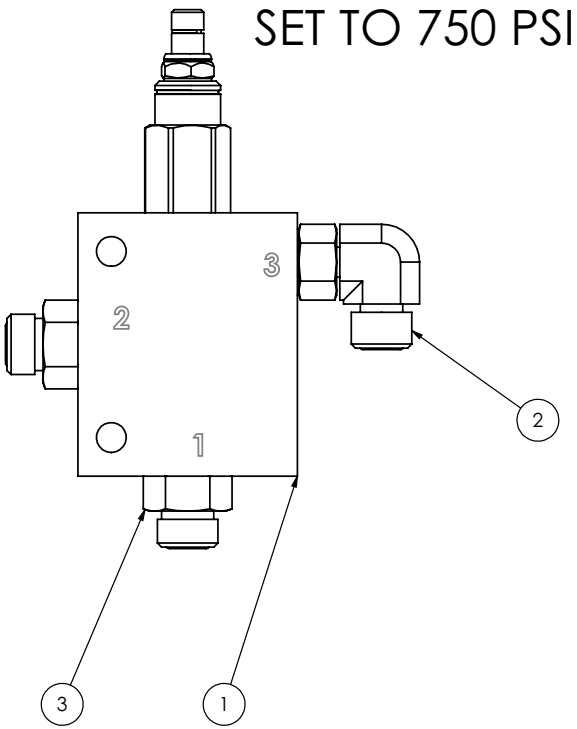

204U72 - LIMB GUARD, CUMMINS

ITEM NO.	PART NUMBER	QTY.	DESCRIPTION
1	525830	1	FRONT LIMB GUARD
2	525833	1	LH LIMB GUARD
3	525831	1	RH LIMB GUARD
4	525832	1	CENTER LIMB GUARD
5	525834	1	LH SCREEN WELDMENT
6	525835	1	RH SCREEN WELDMENT

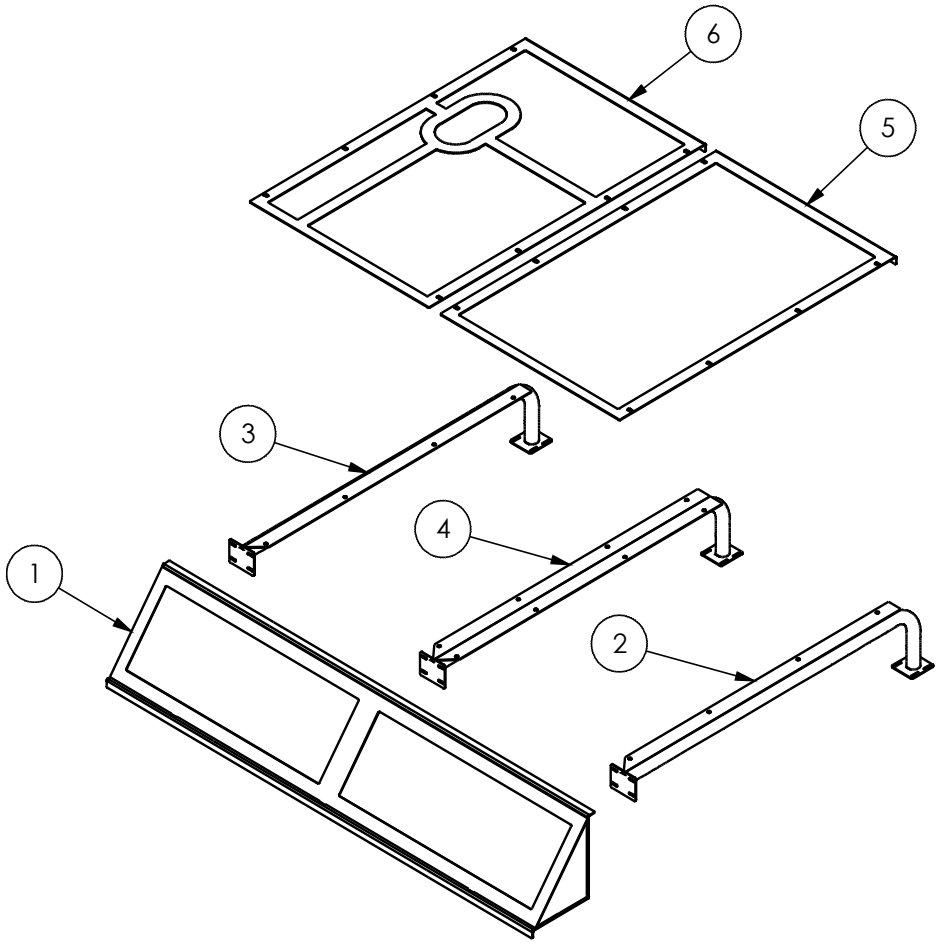

203J02 - REMOTE GREASE FITTING FAN

ITEM NO.	PART NUMBER	QTY.	DESCRIPTION
1	23541	4	CONNECTOR, 1/4 TUBE 1/8 MPT
2	20131	2	COUPLING,1/8 NPT BRASS
3	5215502	1	BRACKET, REM GREASE FITTING

ITEMS NOT SHOWN

ITEM NO.	PART NUMBER	QTY.	DESCRIPTION
4	20139	7	CLAMP, .50" RUBBER LINED
5	20142	2	ELBOW, 1/8 NPT STREET, BRASS
6	22623-20	1	TUBING, 1/4 NYLON
7	29686	1	DECAL IMPORTANT GREASE FAN

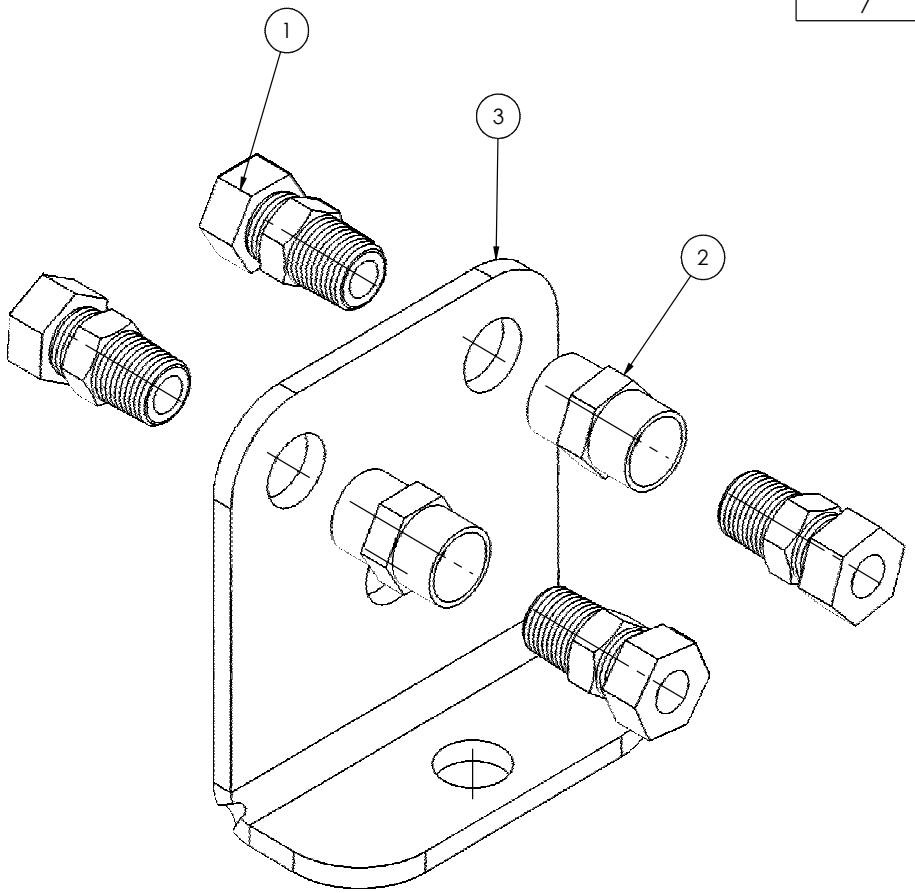

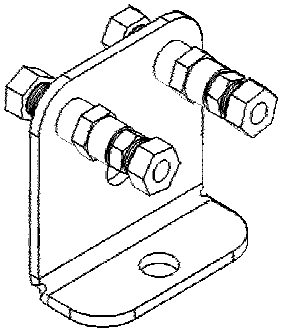

204L08 - KIT, HOSE HOPPER LIFT

ITEM NO.	PART NUMBER	QTY.	DESCRIPTION
1	65462	2	TEE, 3/8" BULKHEAD MORFS
2	61043	4	3/8" MORFS X 1/2" MORB

ITEMS NOT SHOWN

ITEM NO.	PART NUMBER	QTY.	DESCRIPTION
3	525098	2	HOSE BLKHD TEE TO ROD LIFT CY
4	525099	2	HOSE BLKHD TEE TO ROD LIFT CY

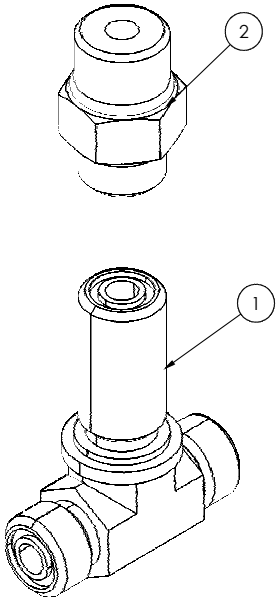

204P85 - HYDRAULIC TANK

ITEM NO.	PART NUMBER	QTY.	DESCRIPTION
1	24539	1	TEE,1/2 MALE BRANCH
2	61053	1	1/4" MORFS X 1/2 MP STRAIGHT
3	66113	1	ELBOW 90°, 1/2"MPT, 3.8" MORF
4	204X14	1	TANK, HYD ASSY, A SERIES

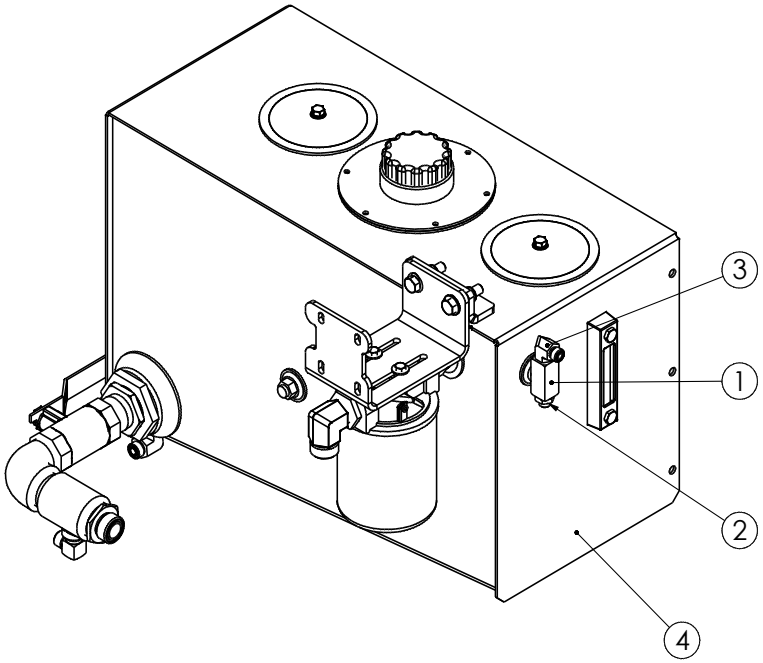

204X14 - HYDRAULIC TANK

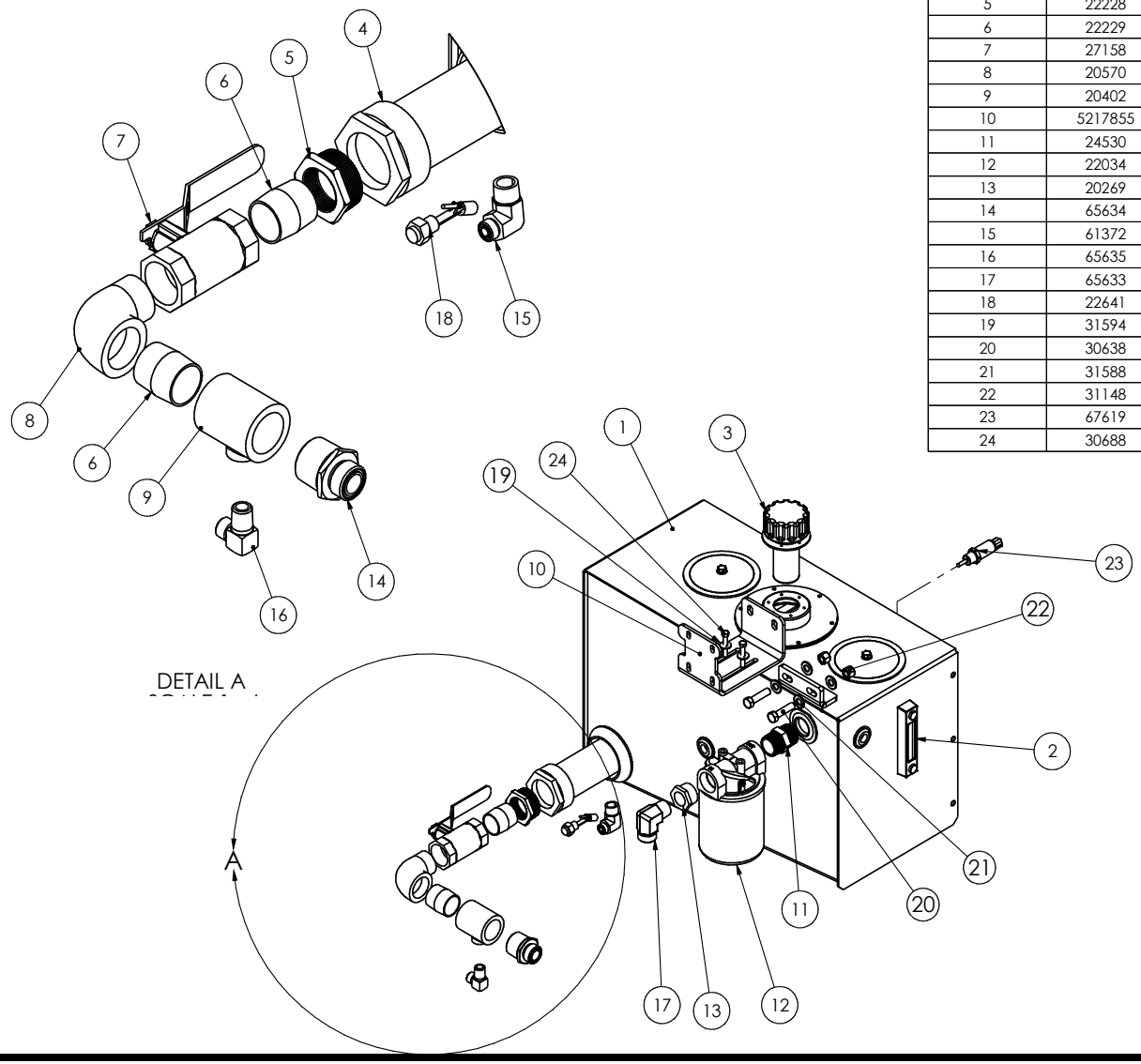

ITEM NO.	PART NUMBER	DESCRIPTION	QTY.
1	60360	RESERVOIR, HYDRAULIC, 22.5 GA	1
2	20110	SIGHT GAUGE	1
3	20390	FILLER\BREATHER CAP	1
4	22232	FILTER,3" STRAINER	1
5	22228	BUSHING 2 X 1-1/2 BLK	1
6	22229	1.50" PIPE NIPPLE, CLOSE, IRON	2
7	27158	BALL VALVE 1-1/2	1
8	20570	ELBOW, STREET, 1/1-2"	1
9	20402	TEE, REDUCING, 1-1/2" X 1/2"	1
10	5217855	BRACKET, OIL FILTER	1
11	24530	HEX NIPPLE 1-1/4 X 1-1/4	1
12	22034	FILTER, HYDRAULIC RETURN	1
13	20269	BUSHING, 1.25" MPT X 1.0" FPT	1
14	65634	ADAPTER, 1 MORFS X 1-1/2 NPT	1
15	61372	ADAPTER, 1/2" MORFS X 3/4" MPT	1
16	65635	ELBOW, 90° 1/2 MORFS X 1/2 NPT	1
17	65633	ELBOW, 90° 1 MORFS X 1 NPT	1
18	22641	SWITCH,LIQUID LEVEL	1
19	31594	WASHER,FLAT 5/16	2
20	30638	BOLT,1/2-13 X 2", GR5	2
21	31588	WASHER, FLAT 1/2"	4
22	31148	NUT,LOCK,1/2-13,HEX	2
23	67619	TEMP TRNSDCR 1/2NPT 1"LNG PRB	1
24	30688	HEX BOLT, 5/16-18 X 2	2

204R34 - POWER MODULE JD115

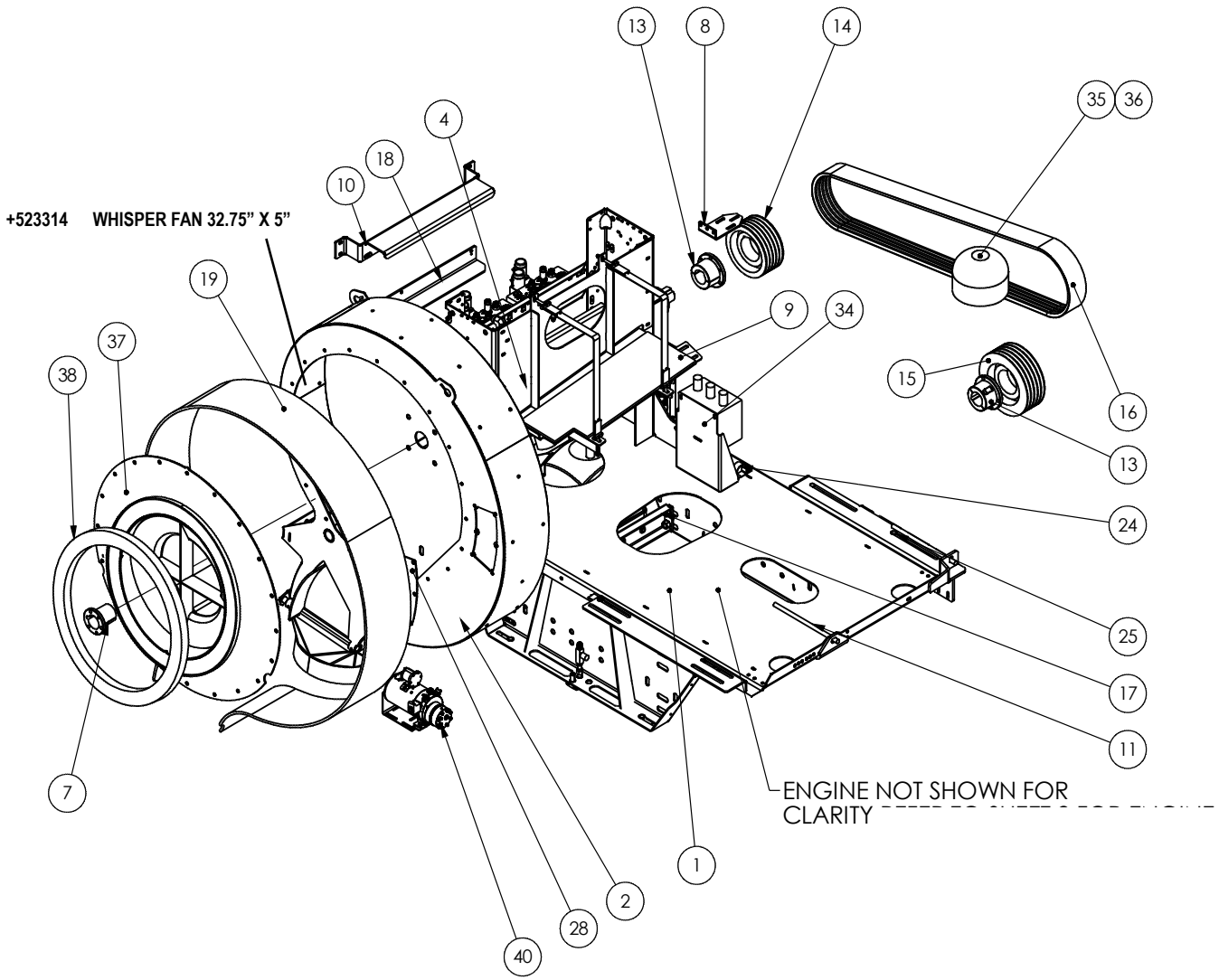

ITEM NO.	PART NUMBER	DESCRIPTION	QTY.
1	524010	WELD,PWR-MOD,JD-T3-08	1
2	523176	FAN HOUSING 7000, RUNWAY	1
3	20494	FLANGE BEARING, 2.250"	2
4	3001137	SHAFT, FAN, A7000, JD 140 ENG	1
5	5212667	SNOWFLAKE BRG SPACER PL	2
6	5212668	WEIR, FAN SHAFT BRG	1
7	22842	TAPERED BUSHING, 2.250 Q2	1
8	5217143	ANGLE BKT, TOP, BLT-GRD,08	1
9	5217144	ANGLE BKT, BOT, BLT-GRD, A7-08	1
10	523741	WELD,GUARD,SHAFT,FAN,A7-08	1
11	5207852	JACK SCREW, ENG SKID	2
12	28687	ACTUATOR, 4"	1
13	20476	TAPERED BUSHING, 2.250 R1	2
14	21304	5R5V85 PULLEY	1
15	61209	PULLEY, 5R5V10.3	1
16	20603	BELT, 5/5VX1180 BANDED	1
17	522854	ANCHOR, RAIL, FUEL TANK	2
18	5214747	LEAF,GUARD,SHAFT,FAN,A7-08	1
19	29339	FLAP SET, FAN HOUSING,A7,A8,A9	1
20	28431	CLAMP, TOP 1/2" HARDLINE	1
21	28432	CLAMP, 1/2" TUBE, HALVES, TWIN	2
22	29469	CLAMP HALVES, 3/4"	6
23	29470	CLAMP COVER PLATE, 3/4"	3
24	25092	CLAMP, 2" COATED	1
25	523717	TENSION ADJUSTMENT WELDMENT	8
26	23402	GROMMET,1.5" I.D. X 2.125" O.D.	1
27	204K79	ENGINE ASSY A7T/A8T, T4F,JD115	1
28	5219449	PANE,WINDOW, INSP, FAN, A7	1
29	5221617	MOUNT, SENSOR, FAN HOUSING	1
30	65568	ROD END, 1/4-28 /2458K321	1
31	5221583	ROD, SENSOR, FAN HOUSING	1
32	5221584	LEVER, HALL EFFECT SENSOR, FAN	1
33	65794	SENSOR, HALL EFFECT	1
34	5221628	DEF FILTER MNT BKT, A8T	1
35	26237	SY-KLONE PRECLEANER 9001DLS	1
36	60813	4-1/2 | " T-BOLT CLAMP	1
37	523708	CVR PLATE, FAN HSNG, A7/A9, MS	1
38	5206385	SEAL, FAN, A7000 HP	1
39	526010	WELD, CONTROL BOX BRKT, A8T	1
40	204L04	HYDRAULICS, STANDARD A7	1
41	204L07	KIT, HOSE PWR MOD STANDARD	1

* = ITEMS NOT SHOWN

204R34 - POWER MODULE JD115

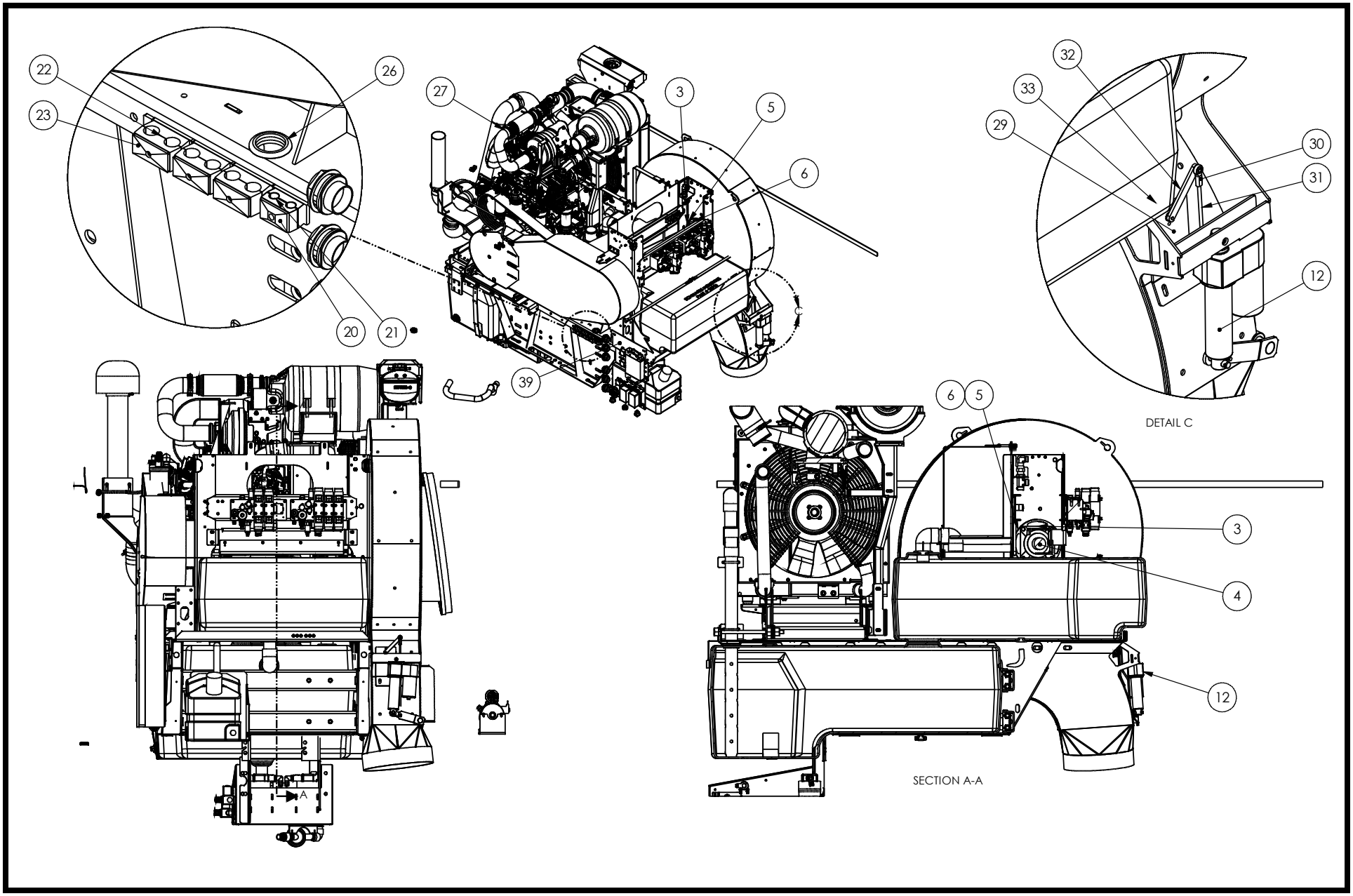

204K79 - ENGINE JD115

ITEM NO.	PART NUMBER	Default/ QTY.	DESCRIPTION
1	65884	1	ENGINE, JD 115 HP TIER IV
2	523730	1	STUB SHAFT, JD-T3-08
3	521269	1	BEARING PLATE
4	20096	1	SKF BEARING 6212 2RS
5	20405	1	HYD OIL COOLER
6	5219121	2	BKT,OIL COOLER,A7-JD-IT4
7	61898	2	ADAPTER, 1" MORFS X 1" MORB
8	523727	1	WELD, BLT-GRD, A7, JD-T3-08
9	523728	1	ENDCAP,BLT-GRD, A7-08
10	523743	1	WLD, STANDOFF, BELT-GRD, A7-0

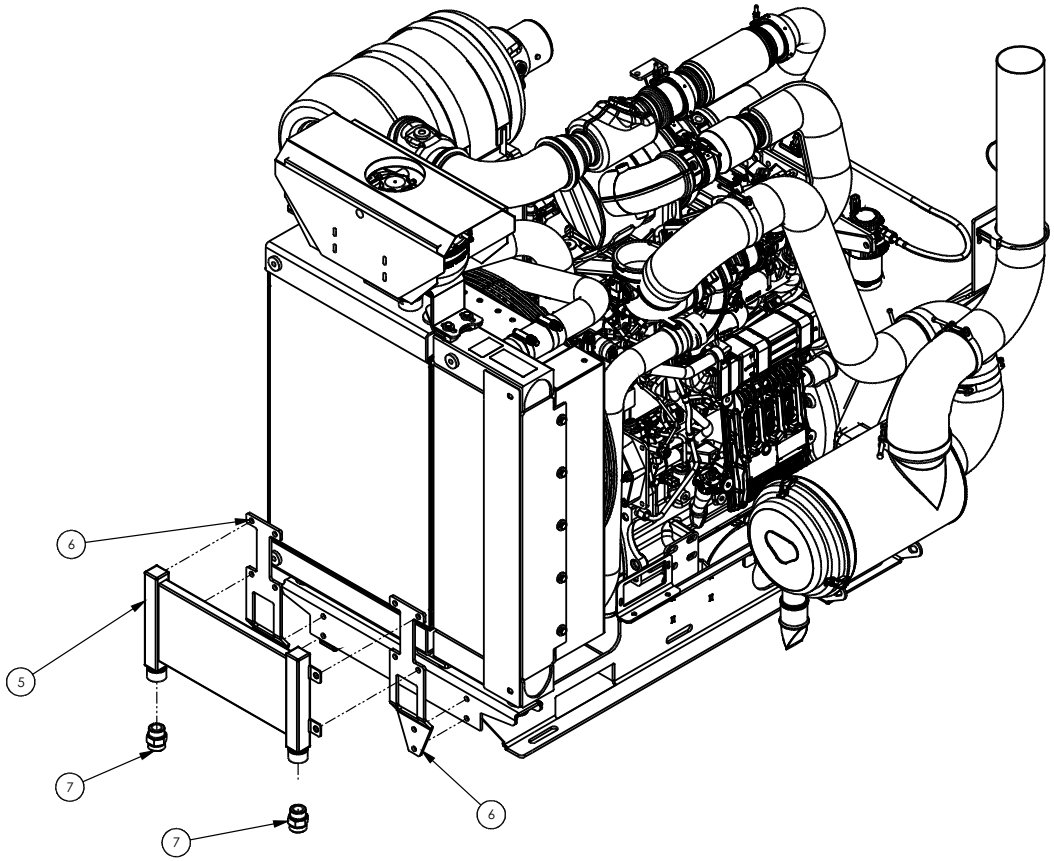

204L04 - HYDRAULICS STANDARD

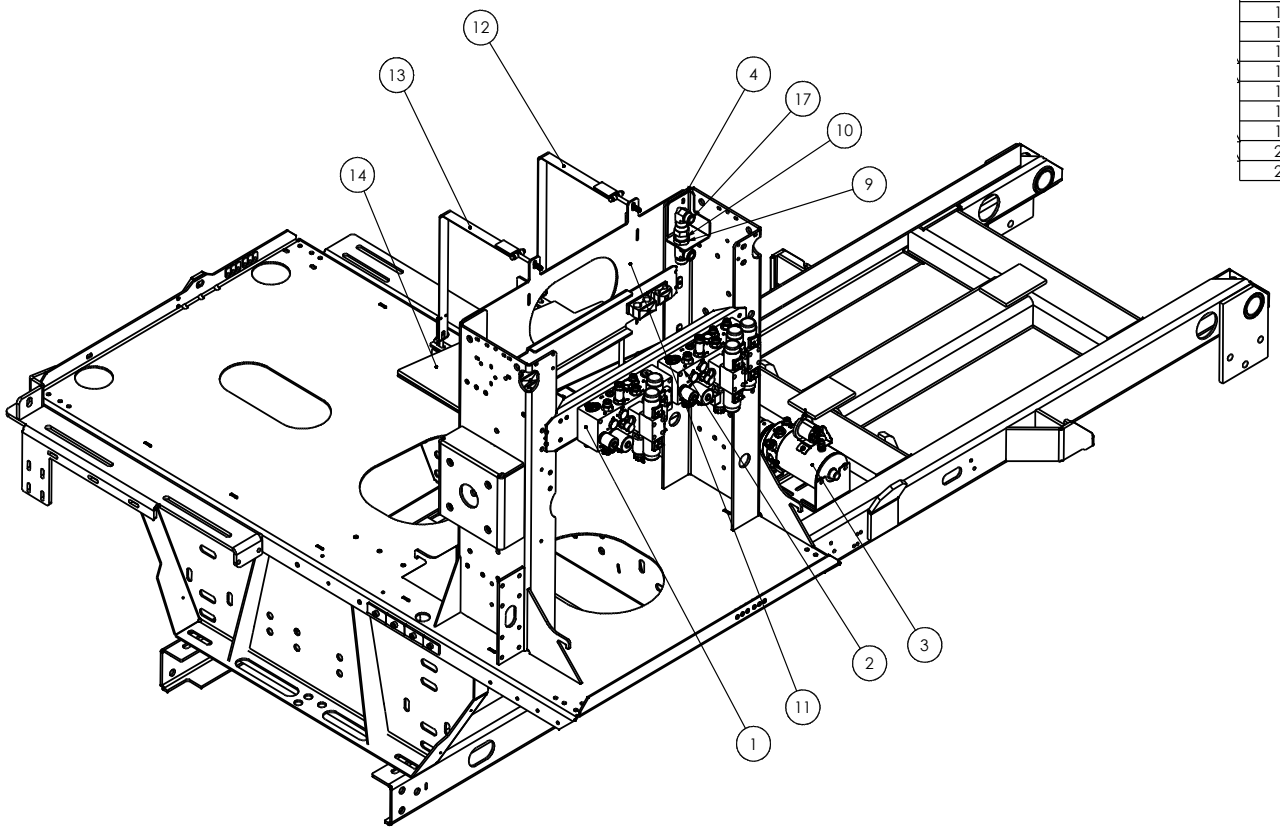

ITEM NO.	PART NUMBER	QTY.	DESCRIPTION
1	204L05	1	MANIFOLD, FRONT ASSY A7 & A9
2	204L06	1	MANIFOLD, REAR ASSY A7 & A9
3	204J94	1	PUMP, AUX HYDRAULIC, ASSEMBLY
4	5221351	1	MOUNT, BLKHD CONN, PWR MOD
5	65462	2	TEE, 3/8" BULKHEAD MORFS
6	65631	1	ADAPTER, 3/8 FORFS X 1/4 NPT
7	21571	1	VALVE, 1/4" FLOW CONTROL
8	65632	1	ADAPTER, 3/8 MORFS X 1/4 NPT
9	65643	1	NUT, 3/4 BULKHEAD
10	65642	1	TEE, BULKHEAD 3/4 MORFS
11	525037	1	MOUNT, HYD TANK A-SERIES
12	525038	1	STRAP, HYD TANK, LONG WELDMEN
13	525039	1	STRAP, HYD TANK, SHORT WELDME
14	65691	1	PAD, HYD TANK MOUNT
15	29470	3	CLAMP COVER PLATE, 3/4"
16	29469	6	CLAMP HALVES, 3/4"
17	62289	1	ELBOW, 90° 3/4 MORFS X 3/4 FO
18	28900	120 in	ABRASION SLEEVE 3/4" ID
19	28431	1	CLAMP, TOP 1/2" HARDLINE
20	28432	1	CLAMP, 1/2" TUBE, HALVES, TWIN
21	SK-2381	1	A7T HYDRAULIC SCHEMATIC

*ITEM NOT SHOWN

204L04 - HYDRAULICS STANDARD

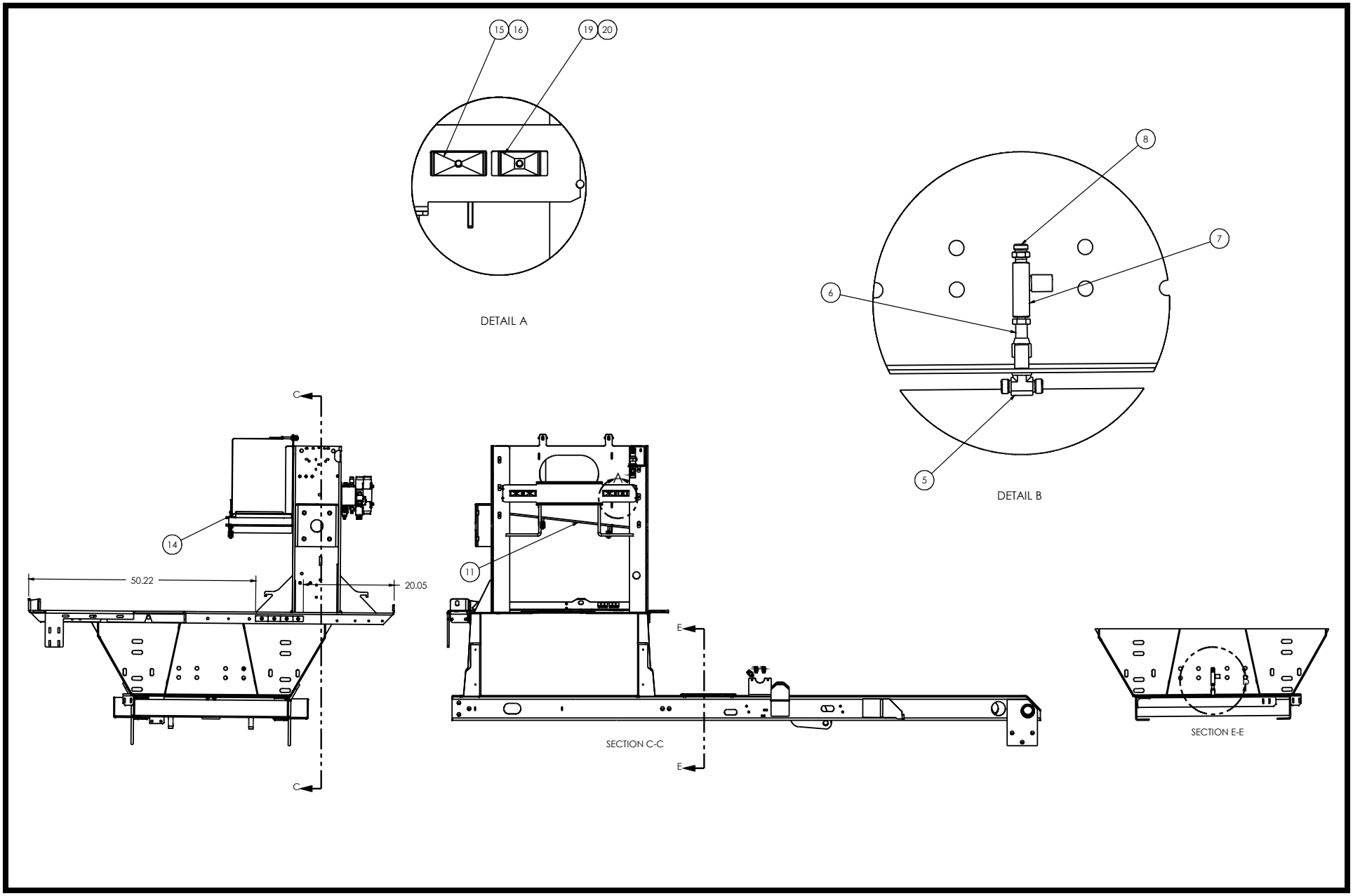

204L04 - HYDRAULICS STANDARD

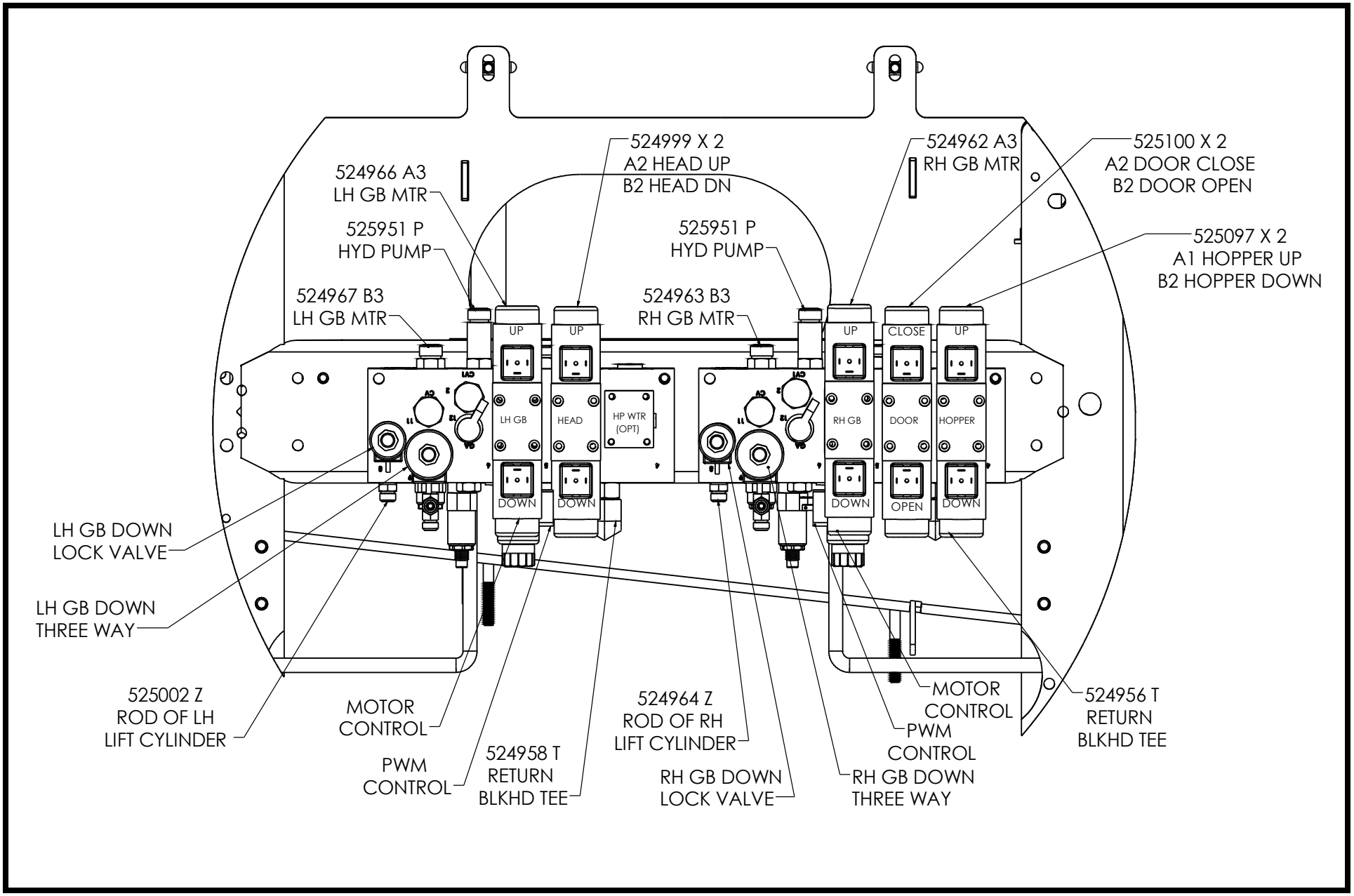

204L05 - MANIFOLD, FRONT

ITEM NO.	PART NUMBER	DESCRIPTION	QTY.
1	60090	DO2 MANF W/G/B CIR.	1
2	61014	1/2" MORFS X 1/2" MORB	2
3	61013	1/2" MORFS X 1/2" MORB LONG	1
4	61043	3/8" MORFS X 1/2" MORB	2
5	61030	1/4" MORFS X 1/4" MORB	1
6	27180	#10 SAE HEX HEAD PLUG	2
7	23981	#4 SAE HEX HEAD PLUG	2
8	62110	ELBOW, 5/8" MORB X 3/4" MORFS 90	1
9	61034	RUN TEE,1/4" MORFSXMORFSXMORB	1
10	61373	ADAPTER, 3/8 MORFS X 1/4 MORB	1
11	65763	VALVE, VAR SPEED GB ASSY	1
12	24111	PLUG, 1/2" SAE HOLLOW HEX	2
13	WI-UTL-011	WORK INSTRUCTION FOR FLOW CONTROL VALVE ASSY FOR G/B	1

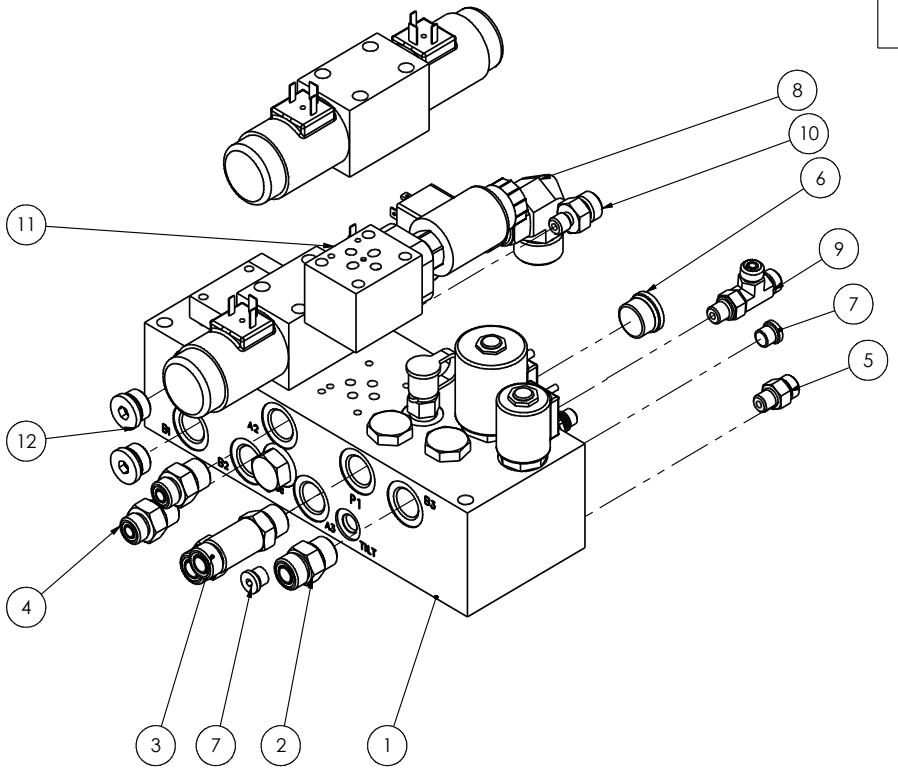

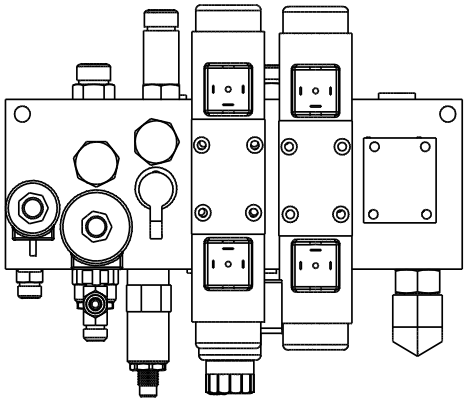

60090 - MANIFOLD DO2 W/G/B CIR.

ITEM NO.	SCHEMATIC NO.	MANIFOLD MARKING	PART NUMBER	QTY.	DESCRIPTION
1	1	60089	60774	1	Do3 MANIF W/G-B CIRCUIT, MANIF-ONLY
2	2,11	CV1,CV	68090	2	VALVE, CHECK, CXCD-XAV
3	3	RV	23924	1	VALVE, RV10-22-A-0-N-35/25
4	4	4	22042	1	PLATE PORT COVER
5	5,6	5,6	61978	2	DO3 VALVE, 4WE6G6X/EG12N9K4
6	12	12	23653	1	TEST NIPPLE, #4 SAE ORB
7	7	POC	62058	1	PO CHECK, CKCB-XCN
8	8	8	23965	1	VALVE, SV08-22-N-12DB
9	9	9	23964	1	VALVE, SV10-34-N-12DB
10	10	FC	23963	1	VALVE, FC10-20A-O-N
11	-	GA	20469	1	PLUG, 3/8 SAE HEX

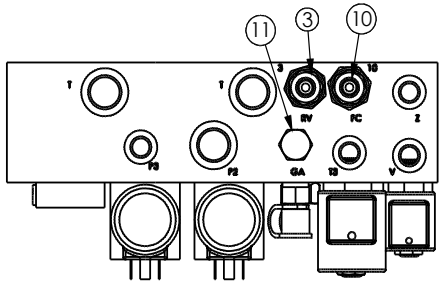

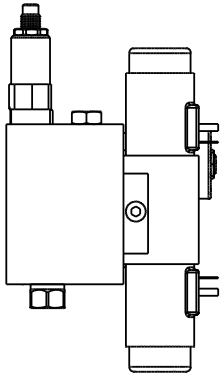

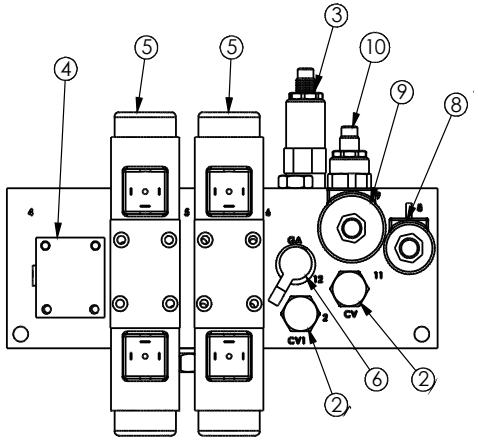

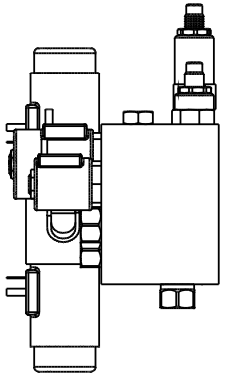

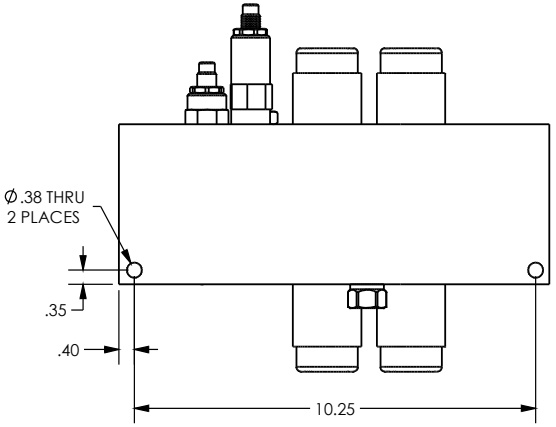

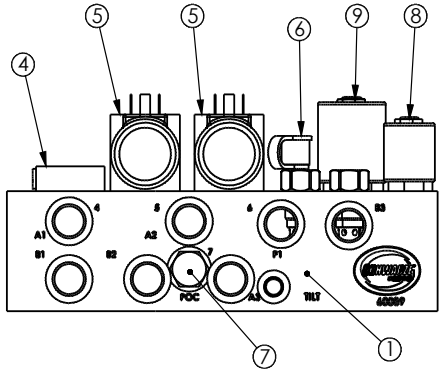

SCHEMATIC

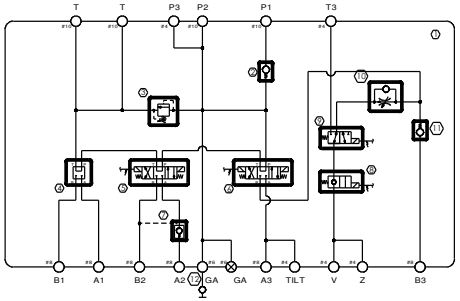

NOTES:
2800 PSI MAXIMUM PRESSURE
15 GPM MAXIMUM FLOW

204L06 - MANIFOLD REAR

ITEM NO.	PART NUMBER	QTY.	DESCRIPTION
1	60089	1	DO2 MANF W/G/B CIR.
2	61014	2	1/2" MORFS X 1/2" MORB
3	61013	1	1/2" MORFS X 1/2" MORB LONG
4	61043	4	3/8" MORFS X 1/2" MORB
5	61030	1	1/4" MORFS X 1/4" MORB
6	27180	2	#10 SAE HEX HEAD PLUG
7	23981	2	#4 SAE HEX HEAD PLUG
8	62110	1	ELBOW, 5/8" MORB X 3/4" MORFS 90
9	61034	1	RUN TEE,1/4" MORFSXMORFSXMORB
10	61373	1	ADAPTER, 3/8 MORFS X 1/4 MORB
11	65763	1	VALVE, VAR SPEED GB ASSY
12	WI-UTL-011	1	WORK INSTRUCTION FOR FLOW CONTROL VALVE ASSY FOR G/B

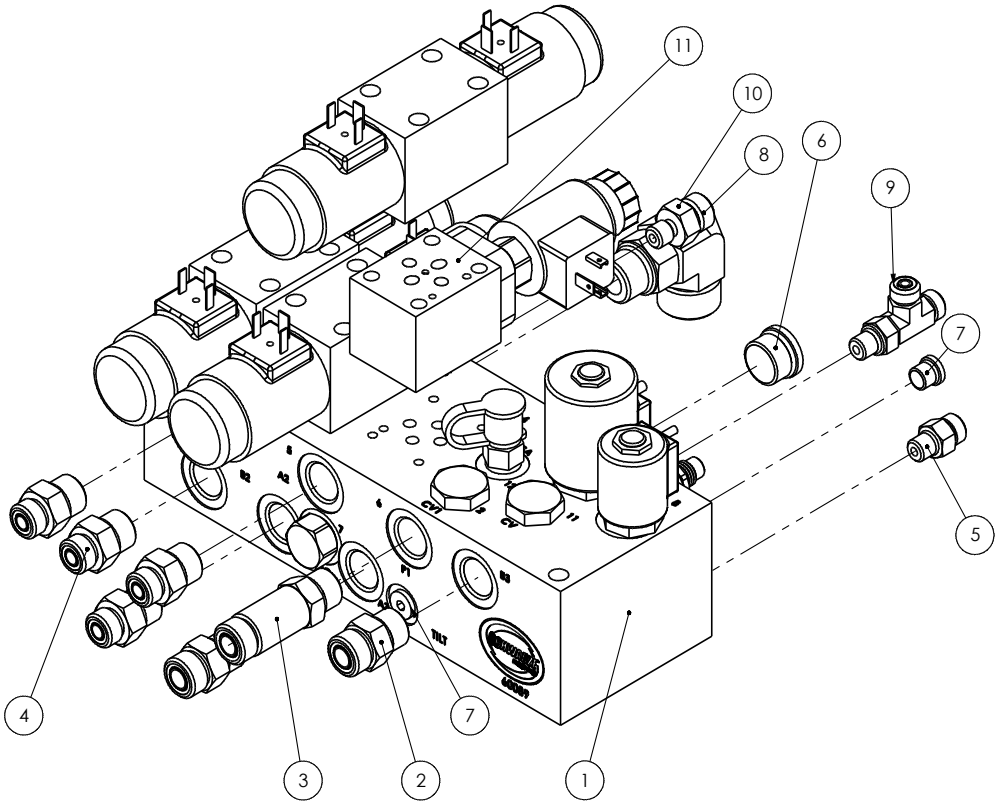

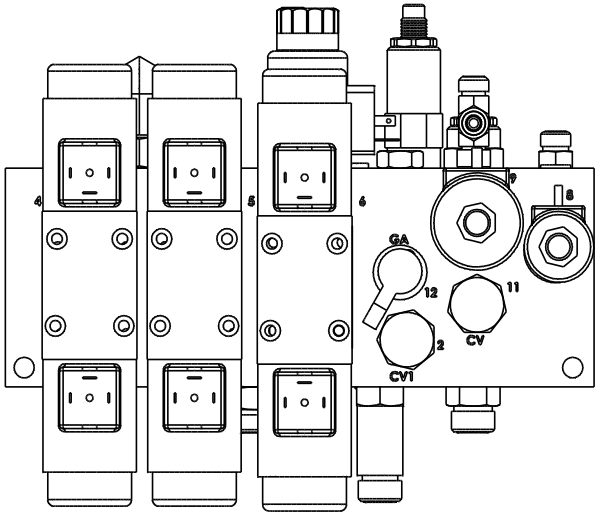

60089 - MANIFOLD, DO2 W/G/B CIR.

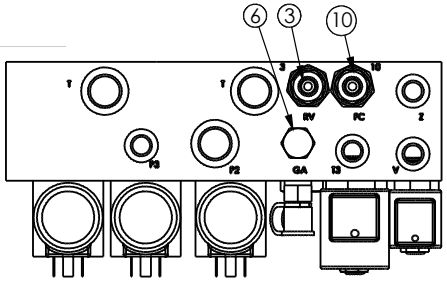

ITEM NO.	SCHEMATIC NO.	MANIFOLD MARKING	PART NUMBER	DESCRIPTION	QTY.
1	1	60089	60774	Do3 MANIF W/G-B CIRCUIT, MANIF-ONLY	1
2	2,11	CV1,CV	23962	VALVE, CV-10-20-O-N-30	2
3	3	RV	23924	VALVE, RV10-22-A-0-N-35/25	1
4	4,5,6	4,5,6	61978	DO3 VALVE, 4WE6G6X/EG12N9K4	3
5	12	12	23653	TEST NIPPLE, #4 SAE ORB	1
6	-	GA	20469	PLUG, 3/8 SAE HEX	1
7	7	POV	62058	PO CHECK, CKCB-XCN	1
8	8	8	23965	VALVE, SV08-22-N-12DB	1
9	9	9	23964	VALVE, SV10-34-N-12DB	1
10	10	FC	23963	VALVE, FC10-20A-O-N	1

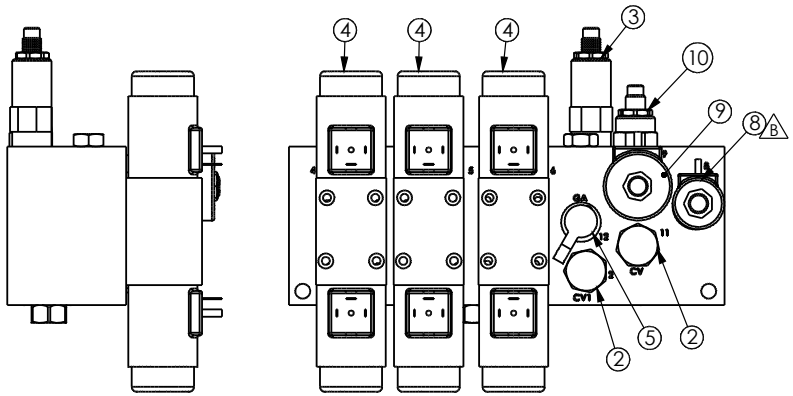

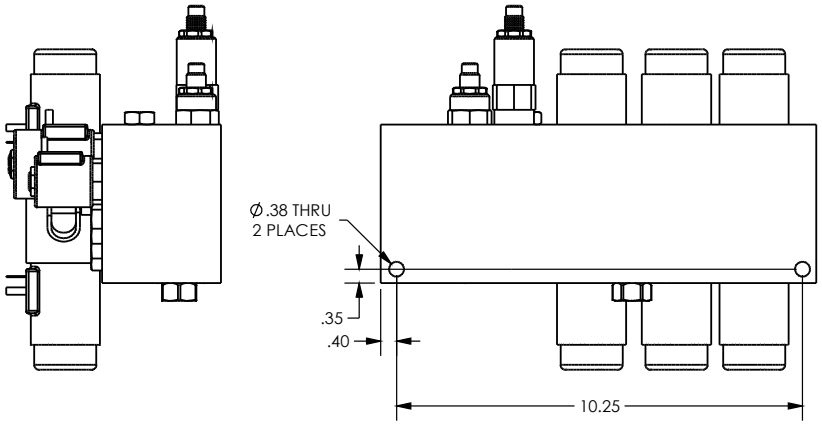

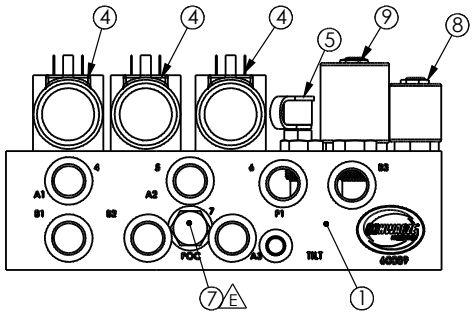

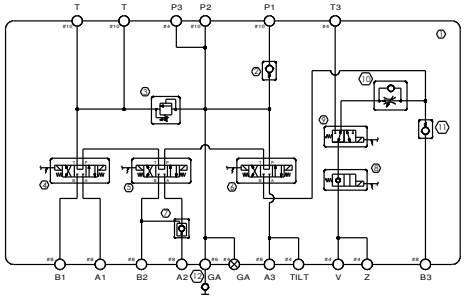

NOTES:
2800 PSI MAXIMUM PRESSURE
15 GPM MAXIMUM FLOW

204J94 - HYDRAULIC PUMP

ITEM NO.	PART NUMBER	DESCRIPTION	QTY.
1	24089	12V DC HYD PUMP	1
2	61019	3/8" MORFS X 3/8" MORB	2
3	61374	ADAPTER, 1/2" MORFS X 3/8" MOR	1

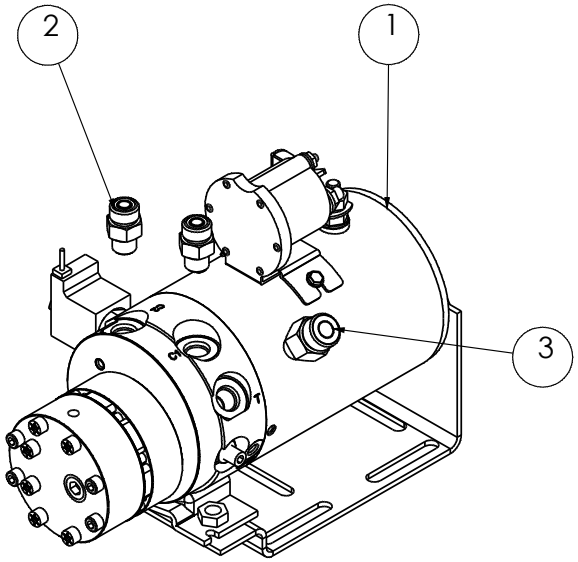

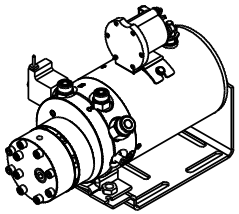

204R35 - POWER MODULE JD134

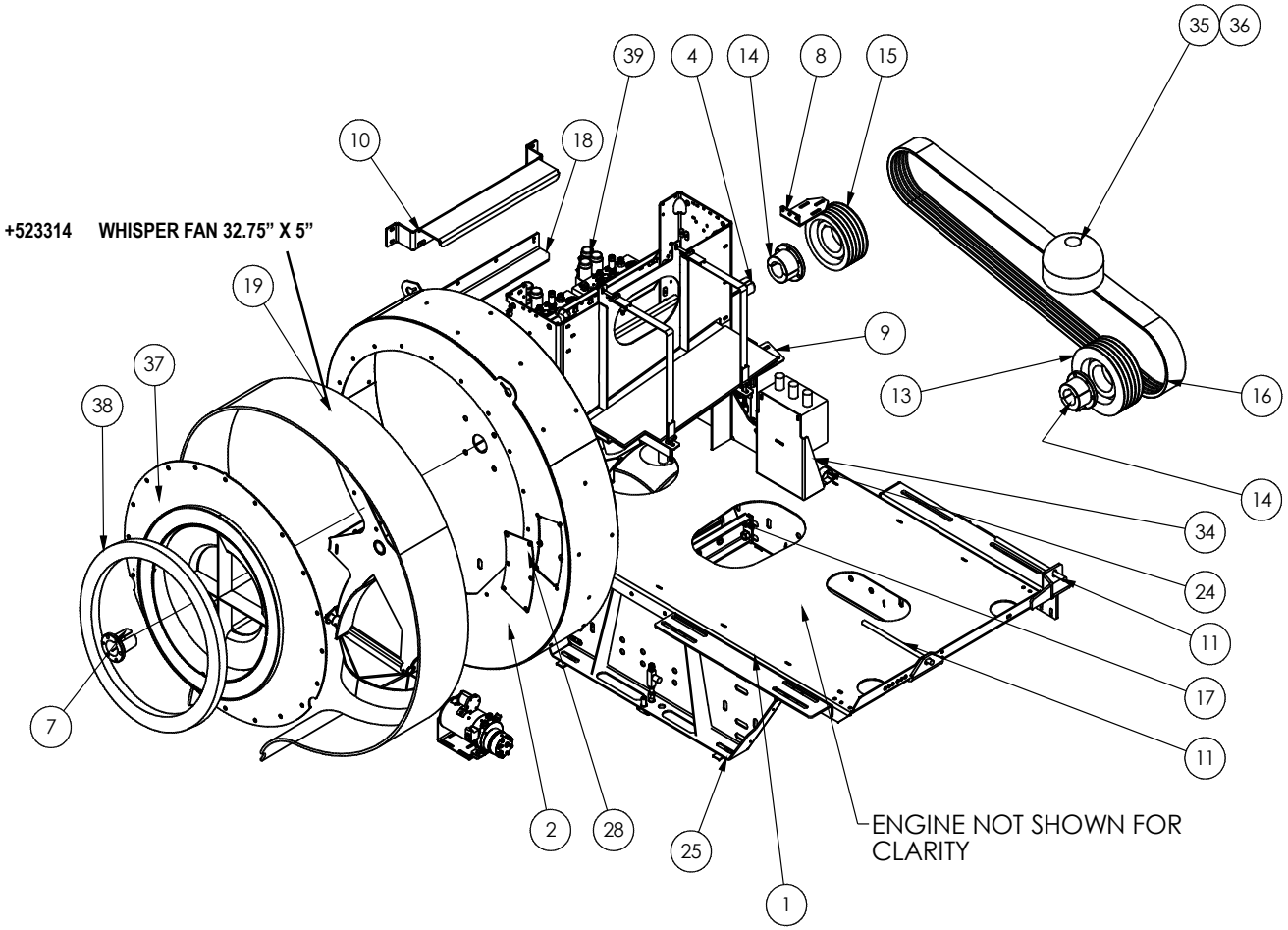

ITEM NO.	PART NUMBER	QTY.	DESCRIPTION
1	524010	1	WELD,PWR-MOD,JD-T3-08
2	523176	1	FAN HOUSING 7000, RUNWAY
3	20494	2	FLANGE BEARING, 2.250"
4	3001137	1	SHAFT, FAN, A7000, JD 140 ENG
5	5212667	2	SNOWFLAKE BRG SPACER PL
6	5212668	1	WEIR, FAN SHAFT BRG
7	22842	1	TAPERED BUSHING, 2.250 Q2
8	5217143	1	ANGLE BKT, TOP, BLT-GRD,08
9	5217144	1	ANGLE BKT, BOT, BLT-GRD, A7-08
10	523741	1	WELD,GUARD,SHAFT,FAN,A7-08
11	5207852	2	JACK SCREW, ENG SKID
12	28687	1	ACTUATOR, 4"
13	61209	1	PULLEY, 5R5V10.3
14	20476	2	TAPERED BUSHING, 2.250 R1
15	21304	1	5R5V85 PULLEY
16	20603	1	BELT, 5/5VX1180 BANDED
17	522854	2	ANCHOR, RAIL, FUEL TANK
18	5214747	1	LEAF,GUARD,SHAFT,FAN,A7-08
19	29339	1	FLAP SET, FAN HOUSING,A7,A8,A9
20	28431	1	CLAMP, TOP 1/2" HARDLINE
21	28432	2	CLAMP, 1/2" TUBE, HALVES, TWIN
22	29469	6	CLAMP HALVES, 3/4"
23	29470	3	CLAMP COVER PLATE, 3/4"
24	25092	1	CLAMP, 2" COATED
25	523717	8	TENSION ADJUSTMENT WELDMENT
26	23402	1	GROMMET,1.5" I.D. X 2.125" O.D.
27	204J66	1	ENG ASSY, A7T/A8T, T4F, JD140
28	5219449	1	PANE,WINDOW, INSP, FAN, A7
29	5221617	1	MOUNT, SENSOR, FAN HOUSING
30	65568	1	ROD END, 1/4-28 /2458K321
31	5221583	1	ROD, SENSOR, FAN HOUSING
32	5221584	1	LEVER, HALL EFFECT SENSOR, FAN
33	65794	1	SENSOR, HALL EFFECT
34	5221628	1	DEF FILTER MNT BKT, A8T
35	68644	1	SY-KLONE PRECLEANER 9001R
36	60813	1	4-1/2| " T-BOLT CLAMP
37	523708	1	CVR PLATE, FAN HSNG, A7/A9, MS
38	5206385	1	SEAL, FAN, A7000 HP
39	204L04	1	HYDRAULICS, STANDARD A7
40	526010	1	WELD, CONTROL BOX BRKT, A8T
41	204L07	1	KIT, HOSE PWR MOD STANDARD

* INDICATES ITEMS NOT SHOWN

204R35 - POWER MODULE JD134

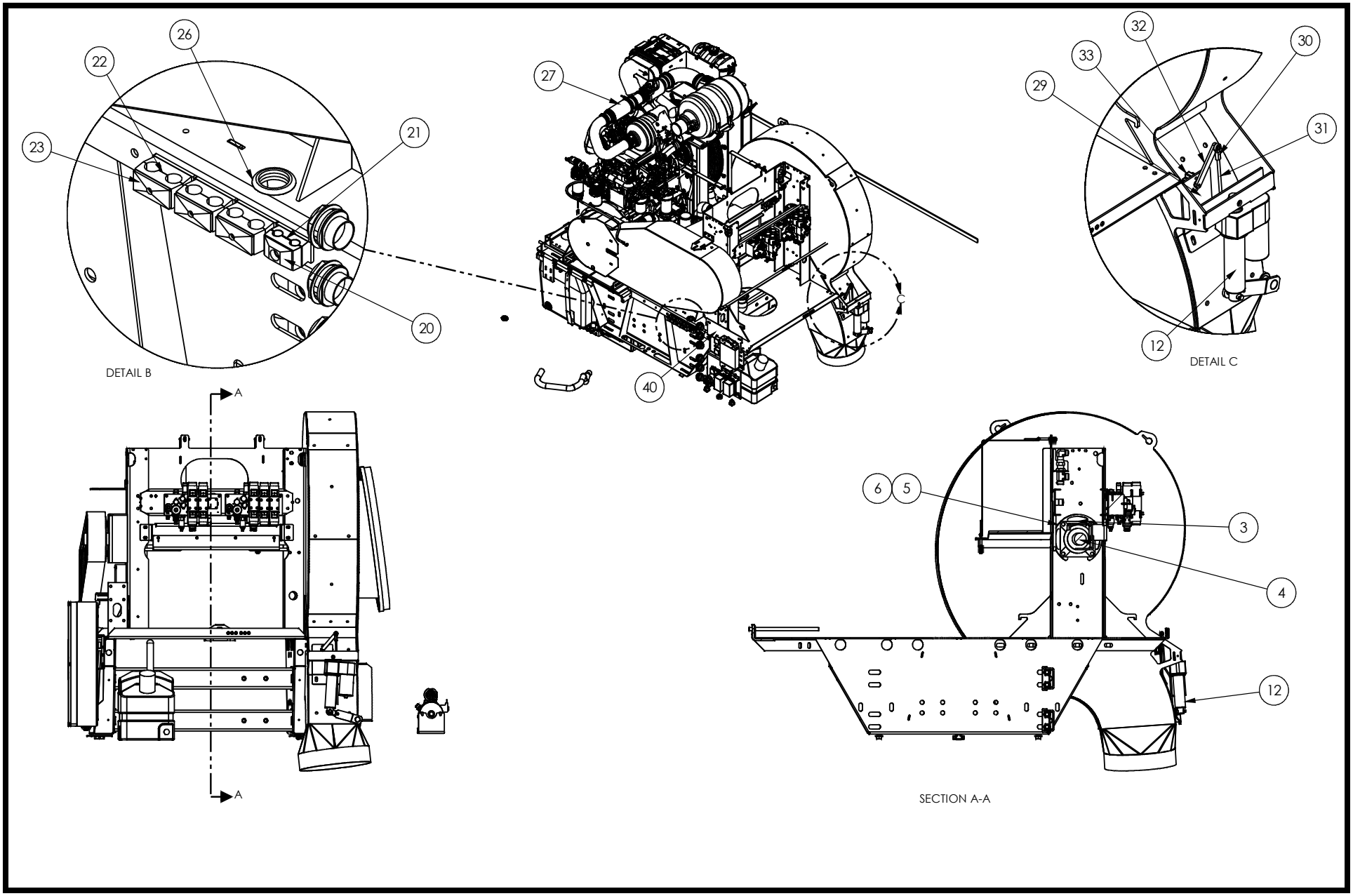

204J66 - ENGINE JD140

ITEM NO.	PART NUMBER	DESCRIPTION	QTY.
1	65407	ENGINE, JD, 134 HP-FT4	1
2	523730	STUB SHAFT, JD-T3-08	1
3	521269	BEARING PLATE	1
4	20096	SKF BEARING 6212 2RS	1
5	5219121	BKT,OIL COOLER,A7-JD-IT4	2
6	20405	HYD OIL COOLER	1
7	61898	ADAPTER, 1" MORFS X 1" MORB	2
8	523743	WLD, STANDOFF, BELT-GRD, A7-0	1
9	523727	WELD, BLT-GRD, A7, JD-T3-08	1
10	523728	ENDCAP,BLT-GRD, A7-08	1

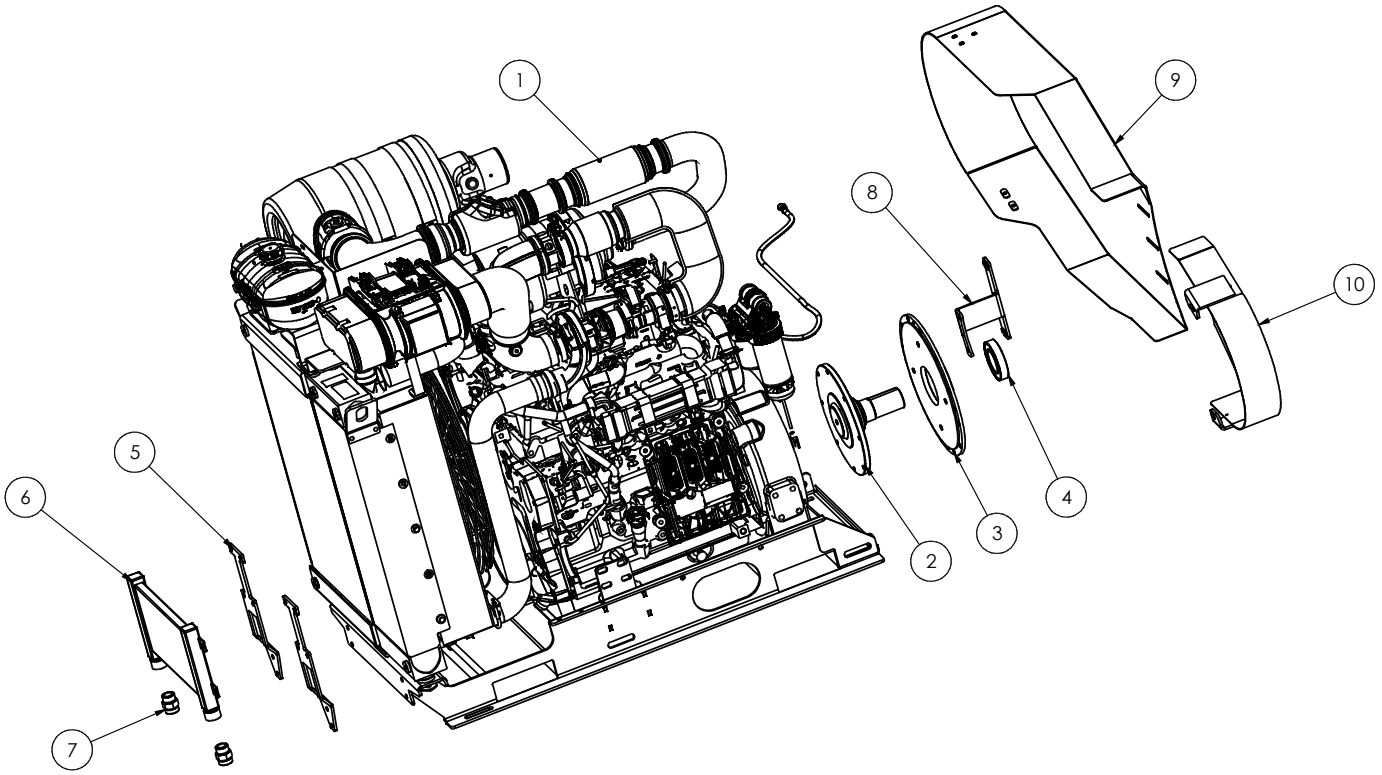

204L14 - POWER MODULE JD115 TIER 4

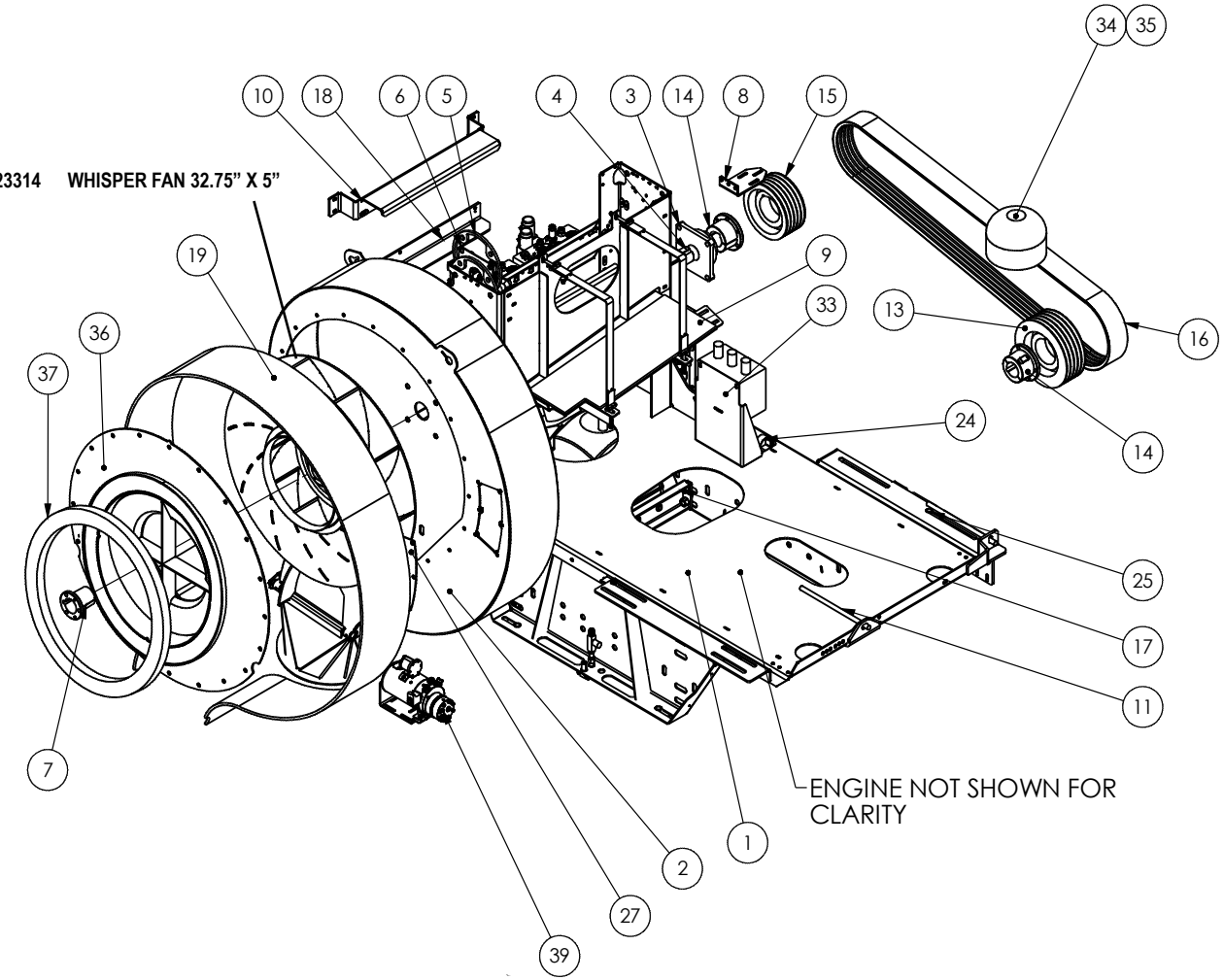

ITEM NO.	PART NUMBER	DESCRIPTION	203P72/QTY.
1	524010	WELD,PWR-MOD,JD-T3-08	1
2	522317	FAN HOUSING A7000 WELD'T	1
3	20494	FLANGE BEARING, 2.250"	2
4	3001137	SHAFT, FAN, A7000, JD 140 ENG	1
5	5212667	SNOWFLAKE BRG SPACER PL	2
6	5212668	WEIR, FAN SHAFT BRG	1
7	22842	TAPERED BUSHING, 2.250 Q2	1
8	5217143	ANGLE BKT, TOP, BLT-GRD,08	1
9	5217144	ANGLE BKT, BOT, BLT-GRD, A7-08	1
10	523741	WELD,GUARD,SHAFT,FAN,A7-08	1
11	5207852	JACK SCREW, ENG SKID	2
12	28687	ACTUATOR, 4"	1
13	61209	PULLEY, 5R5V10.3	1
14	20476	TAPERED BUSHING, 2.250 R1	2
15	21304	5R5V85 PULLEY	1
16	20603	BELT, 5/5VX1180 BANDED	1
17	522854	ANCHOR, RAIL, FUEL TANK	2
18	5214747	LEAF,GUARD,SHAFT,FAN,A7-08	1
19	29339	FLAP SET, FAN HOUSING,A7,A8,A9	1
20	28431	CLAMP, TOP 1/2" HARDLINE	1
21	28432	CLAMP, 1/2" TUBE, HALVES, TWIN	2
22	29469	CLAMP HALVES, 3/4"	6
23	29470	CLAMP COVER PLATE, 3/4"	3
24	25092	CLAMP, 2" COATED	1
25	523717	TENSION ADJUSTMENT WELDMENT	8
26	23402	GROMMET,1.5" I.D. X 2.125" O.D.	1
27	5219449	PANE,WINDOW, INSP, FAN, A7	1
28	5221617	MOUNT, SENSOR, FAN HOUSING	1
29	65568	ROD END, 1/4-28 /2458K321	1
30	5221583	ROD, SENSOR, FAN HOUSING	1
31	5221584	LEVER, HALL EFFECT SENSOR, FAN	1
32	65794	SENSOR, HALL EFFECT	1
33	5221628	DEF FILTER MNT BKT, A8T	1
34	26237	SY-KLONE PRECLEANER 9001DLS	1
35	60813	4-1/2 | " T-BOLT CLAMP	1
36	523708	CVR PLATE, FAN HSNG, A7/A9, MS	1
37	5206385	SEAL, FAN, A7000 HP	1
38	5221406	BRACKET, CONTROL BOX MOUNT	1
39	204L04	HYDRAULICS, STANDARD A7	1
40	204K79	ENGINE ASSY A7T/A8T, T4F,JD115	1
41	204L07	KIT, HOSE PWR MOD STANDARD	1

* INDICATES PARTS NOT SHOWN

204L14 - POWER MODULE JD115 TIER 4

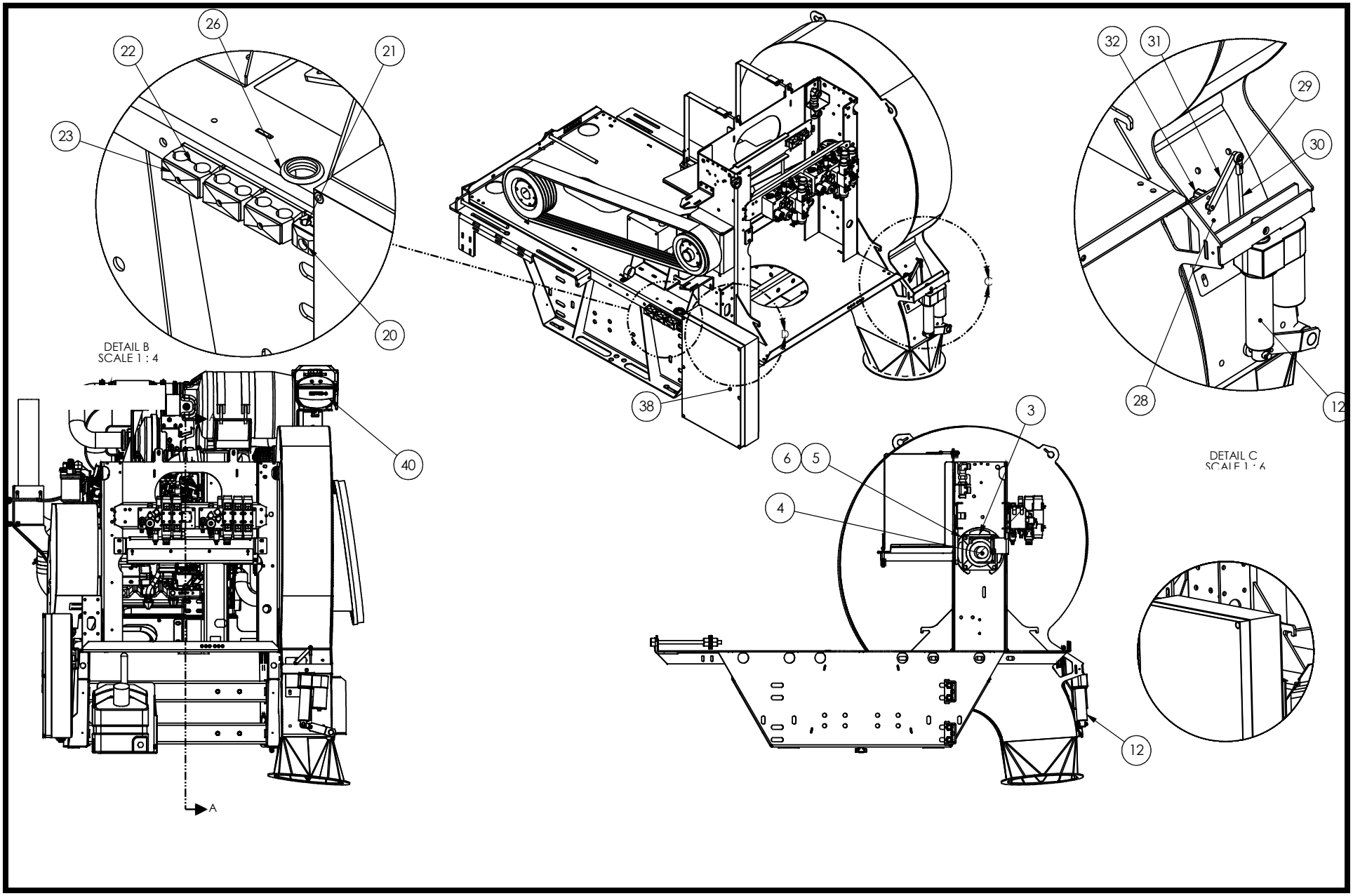

204M02 - POWER MODULE JD140 TIER4

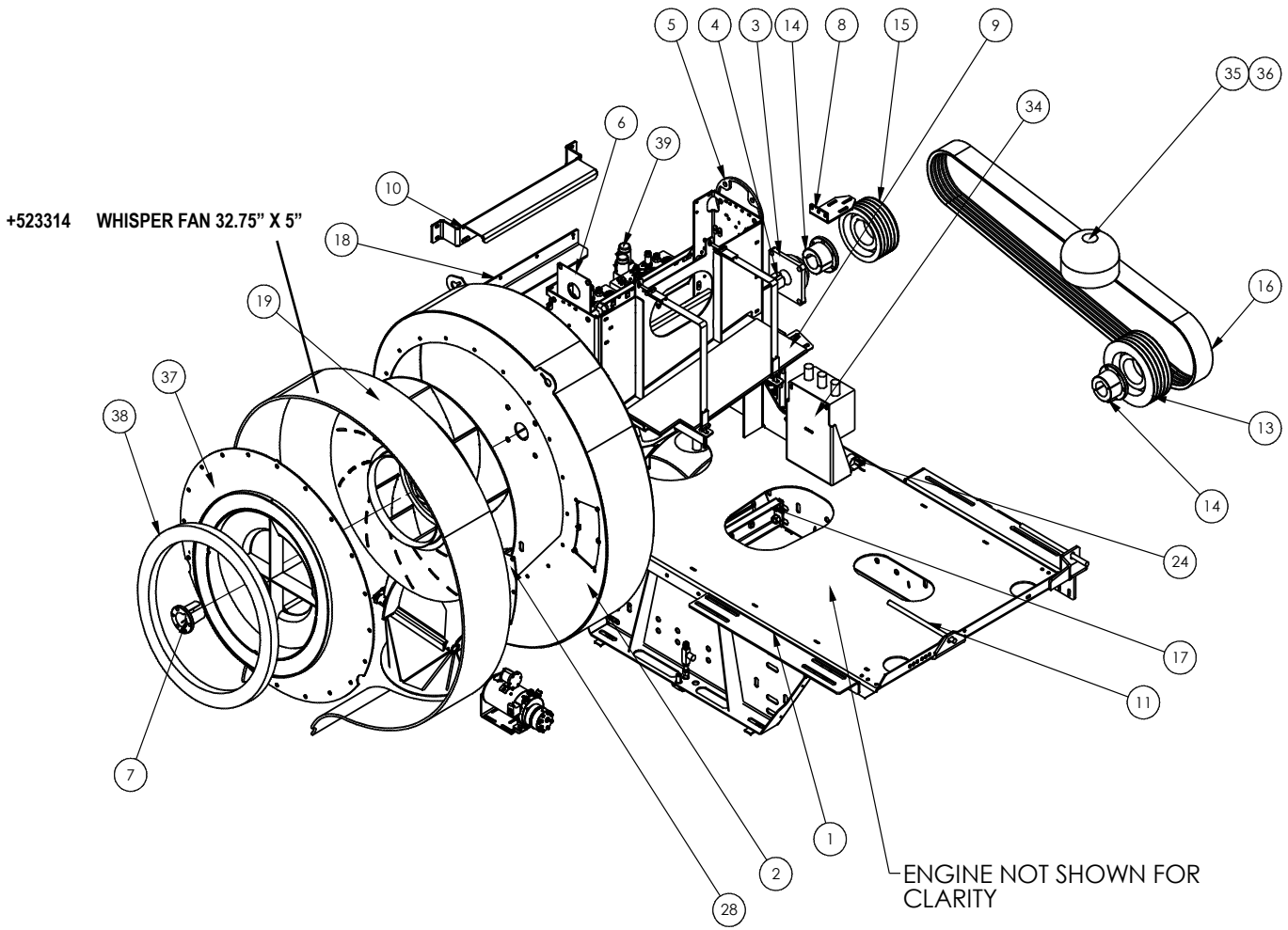

ITEM NO.	PART NUMBER	QTY.	DESCRIPTION
1	524010	1	WELD,PWR-MOD,JD-T3-08
2	522317	1	FAN HOUSING A7000 WELD'T
3	20494	2	FLANGE BEARING, 2.250"
4	3001137	1	SHAFT, FAN, A7000, JD 140 ENG
5	5212667	2	SNOWFLAKE BRG SPACER PL
6	5212668	1	WEIR, FAN SHAFT BRG
7	22842	1	TAPERED BUSHING, 2.250 Q2
8	5217143	1	ANGLE BKT, TOP, BLT-GRD,08
9	5217144	1	ANGLE BKT, BOT, BLT-GRD, A7-08
10	523741	1	WELD,GUARD,SHAFT,FAN,A7-08
11	5207852	2	JACK SCREW, ENG SKID
12	28687	1	ACTUATOR, 4"
13	61209	1	PULLEY, 5R5V10.3
14	20476	2	TAPERED BUSHING, 2.250 R1
15	21304	1	5R5V85 PULLEY
16	20603	1	BELT, 5/5VX1180 BANDED
17	522854	2	ANCHOR, RAIL, FUEL TANK
18	5214747	1	LEAF,GUARD,SHAFT,FAN,A7-08
19	29339	1	FLAP SET, FAN HOUSING,A7,A8,A9
20	28431	1	CLAMP, TOP 1/2" HARDLINE
21	28432	2	CLAMP, 1/2" TUBE, HALVES, TWIN
22	29469	6	CLAMP HALVES, 3/4"
23	29470	3	CLAMP COVER PLATE, 3/4"
24	25092	1	CLAMP, 2" COATED
25	523717	8	TENSION ADJUSTMENT WELDMENT
26	23402	1	GROMMET,1.5" I.D. X 2.125" O.D.
27	204J66	1	ENG ASSY, A7T/A8T, T4F, JD140
28	5219449	1	PANE,WINDOW, INSP, FAN, A7
29	5221617	1	MOUNT, SENSOR, FAN HOUSING
30	65568	1	ROD END, 1/4-28 /2458K321
31	5221583	1	ROD, SENSOR, FAN HOUSING
32	5221584	1	LEVER, HALL EFFECT SENSOR, FAN
33	65794	1	SENSOR, HALL EFFECT
34	5221628	1	DEF FILTER MNT BKT, A8T
35	68644	1	SY-KLONE PRECLEANER 9001R
36	60813	1	4-1/2| " T-BOLT CLAMP
37	523708	1	CVR PLATE, FAN HSNG, A7/A9, MS
38	5206385	1	SEAL, FAN, A7000 HP
39	204L04	1	HYDRAULICS, STANDARD A7
40	5221406	1	BRACKET, CONTROL BOX MOUNT
41	204L07	1	KIT, HOSE PWR MOD STANDARD

* INDICATES ITEMS NOT SHOWN

204M02 - POWER MODULE JD140 TIER 4

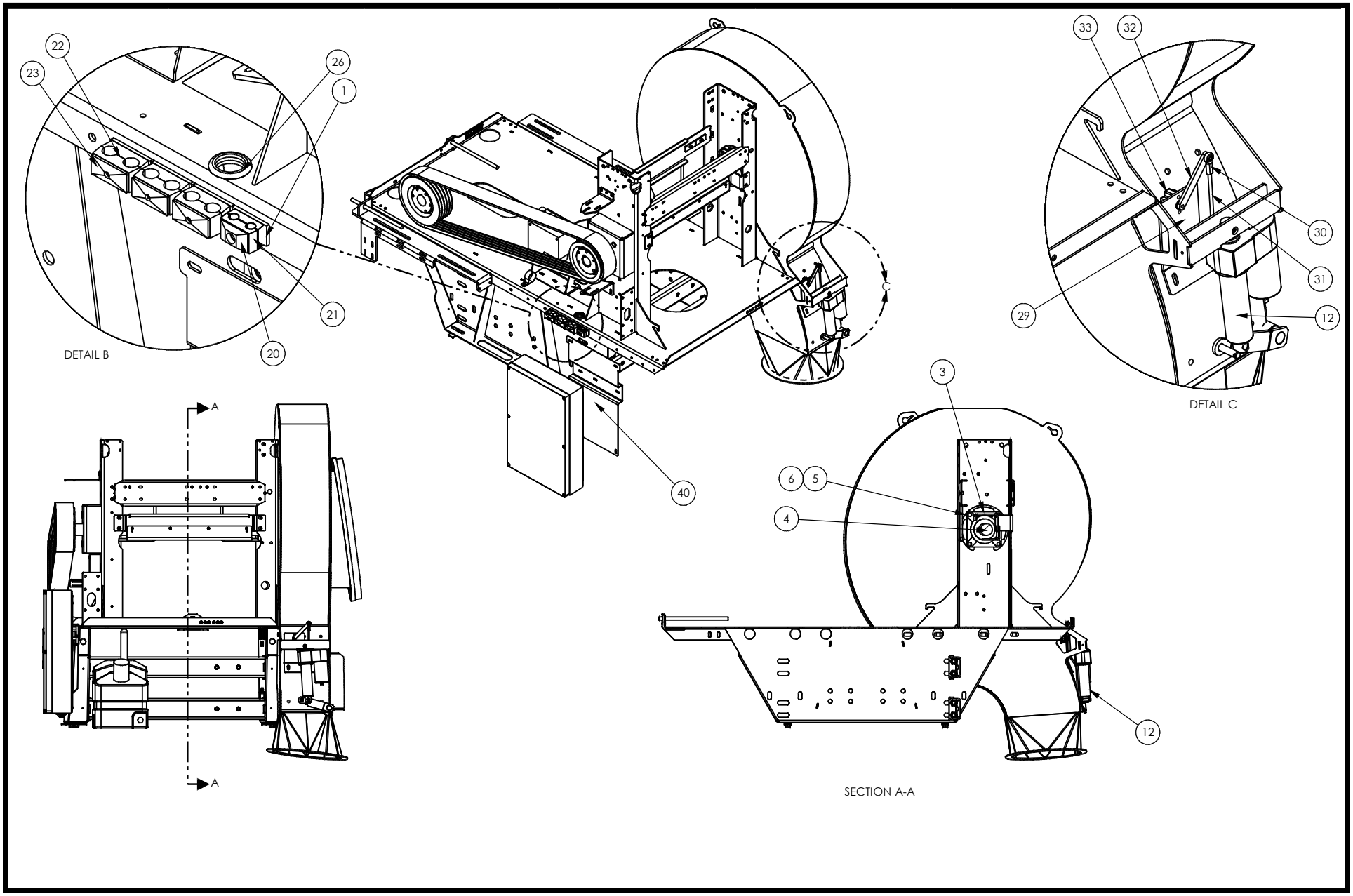

204T16 - POWER MODULE T3 JD115

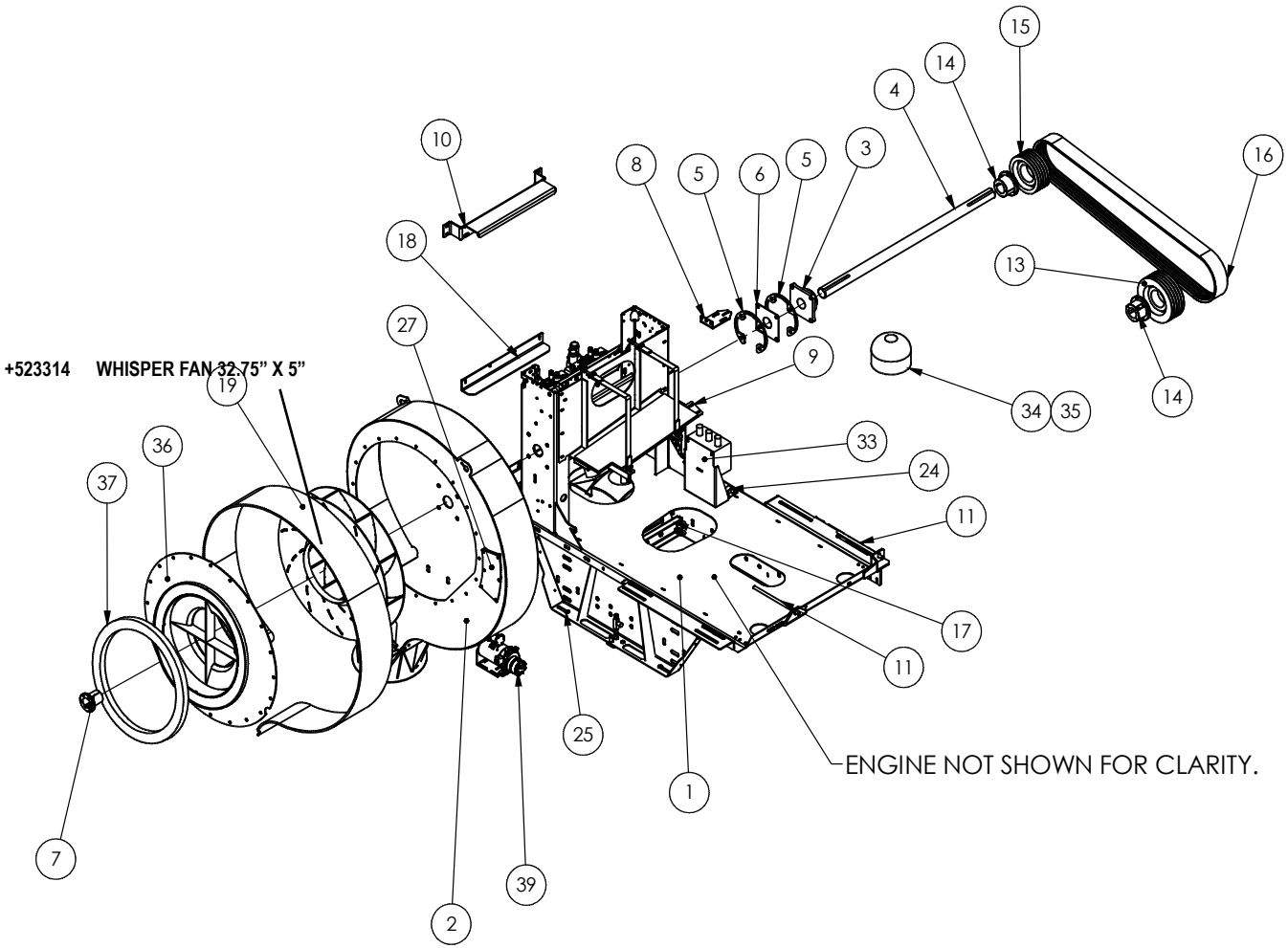

	ITEM NO.	PART NUMBER	DESCRIPTION	QTY.
	1	524010	WELD,PWR-MOD,JD-T3-08	1
	2	522317	FAN HOUSING A7000 WELD'T	1
	3	20494	FLANGE BEARING, 2.250"	2
	4	3001137	SHAFT, FAN, A7000, JD 140 ENG	1
	5	5212667	SNOWFLAKE BRG SPACER PL	2
	6	5212668	WEIR, FAN SHAFT BRG	1
	7	22842	TAPERED BUSHING, 2.250 Q2	1
	8	5217143	ANGLE BKT, TOP, BLT-GRD,08	1
	9	5217144	ANGLE BKT, BOT, BLT-GRD, A7-08	1
	10	523741	WELD,GUARD,SHAFT,FAN,A7-08	1
	11	5207852	JACK SCREW, ENG SKID	2
	12	28687	ACTUATOR, 4"	1
	13	61209	PULLEY, 5R5V10.3	1
	14	20476	TAPERED BUSHING, 2.250 R1	2
	15	21304	5R5V85 PULLEY	1
	16	20603	BELT, 5/5VX1180 BANDED	1
	17	522854	ANCHOR, RAIL, FUEL TANK	2
	18	5214747	LEAF,GUARD,SHAFT,FAN,A7-08	1
	19	29339	FLAP SET, FAN HOUSING,A7,A8,A9	1
	20	28431	CLAMP, TOP 1/2" HARDLINE	1
	21	28432	CLAMP, 1/2" TUBE, HALVES, TWIN	2
	22	29469	CLAMP HALVES, 3/4"	6
	23	29470	CLAMP COVER PLATE, 3/4"	3
	24	25092	CLAMP, 2" COATED	1
	25	523717	TENSION ADJUSTMENT WELDMENT	8
	26	23402	GROMMET,1.5" I.D. X 2.125" O.D.	1
	27	5219449	PANE,WINDOW, INSP, FAN, A7	1
	28	5221617	MOUNT, SENSOR, FAN HOUSING	1
	29	65568	ROD END, 1/4-28 /2458K321	1
	30	5221583	ROD, SENSOR, FAN HOUSING	1
	31	5221584	LEVER, HALL EFFECT SENSOR, FAN	1
	32	65794	SENSOR, HALL EFFECT	1
	33	5221628	DEF FILTER MNT BKT, A8T	1
	34	26237	SY-KLONE PRECLEANER 9001DLS	1
	35	60813	4-1/2|" T-BOLT CLAMP	1
	36	523708	CVR PLATE, FAN HSNG, A7/A9, MS	1
	37	5206385	SEAL, FAN, A7000 HP	1
	38	5221406	BRACKET, CONTROL BOX MOUNT	1
	39	204L04	HYDRAULICS, STANDARD A7	1
*	40	204L07	KIT, HOSE PWR MOD STANDARD	1
*	41	203Q59	ENGINE ASSY, A7/A8-JD-T3-08	1

* INDICATES ITEMS NOT SHOWN

204T16 - POWER MODULE T3 JD115

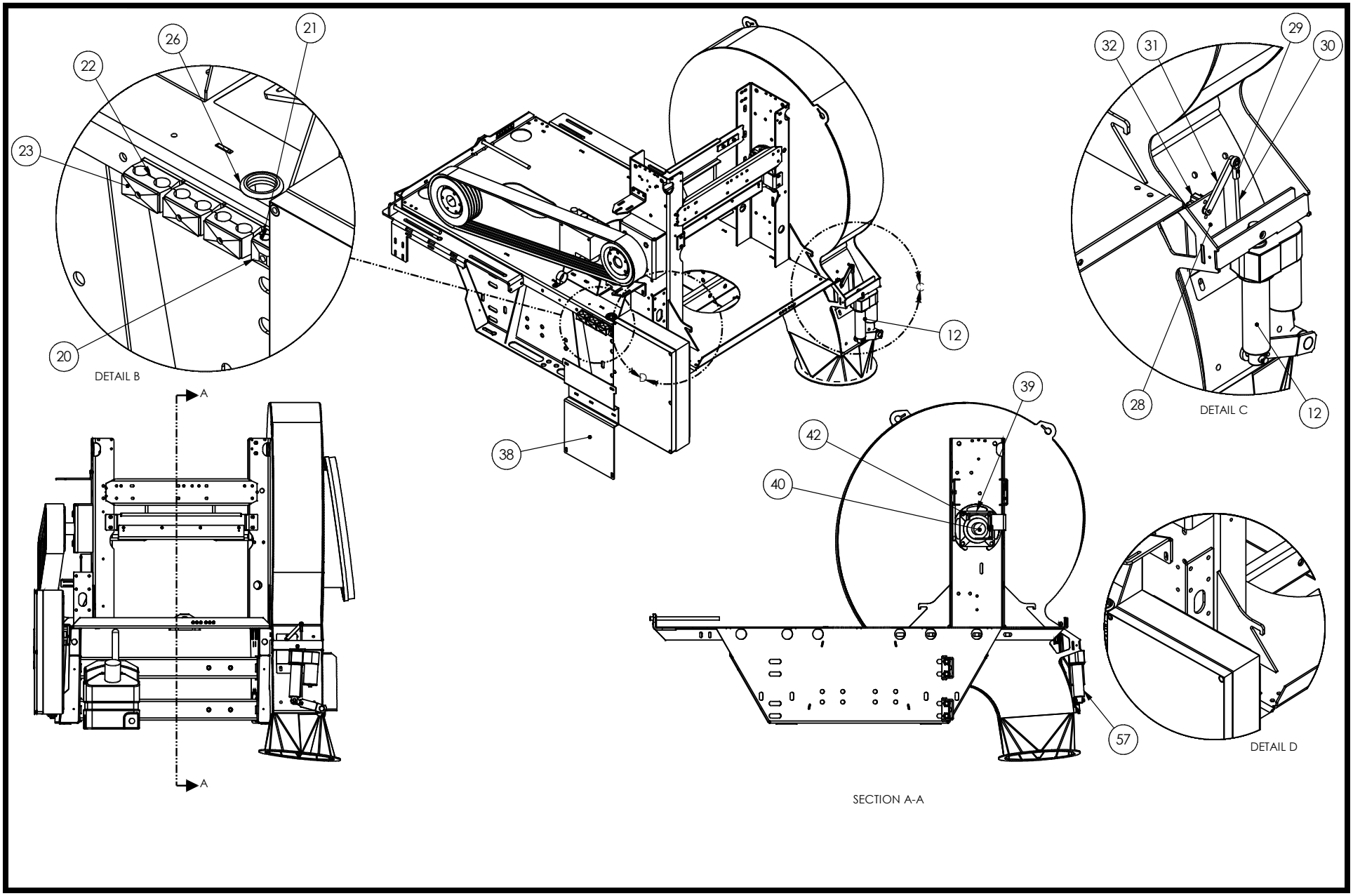

203Q59 - ENGINE JD-T3-08

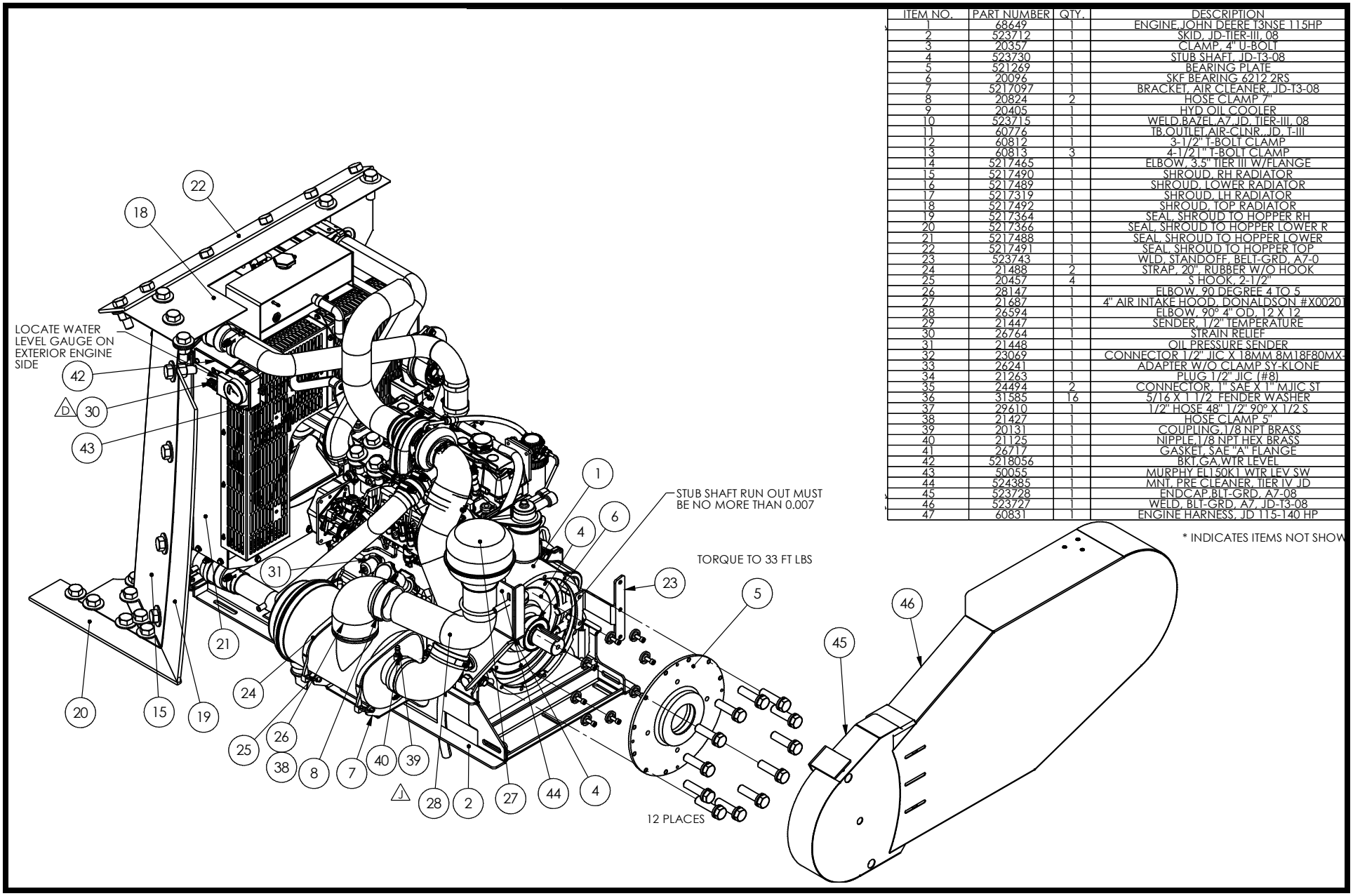

ITEM NO.	PART NUMBER	QTY.	DESCRIPTION
1	68649	1	ENGINE,JOHN DEERE T3NSE 115HP
2	523712	1	SKID, JD-TIER-III, 08
3	20357	1	CLAMP, 4" U-BOLT
4	523730	1	STUB SHAFT, JD-T3-08
5	521269	1	BEARING PLATE
6	20096	1	SKF BEARING 6212 2RS
7	5217097	1	BRACKET, AIR CLEANER, JD-T3-08
8	20824	2	HOSE CLAMP 7"
9	20405	1	HYD OIL COOLER
10	523715	1	WELD,BAZEL,A7,JD, TIER-III, 08
11	60776	1	TB,OUTLET,AIR-CLNR., JD, T-III
12	60812	1	3-1/2" T-BOLT CLAMP
13	60813	3	4-1/21" T-BOLT CLAMP
14	5217465	1	ELBOW, 3.5" TIER III W/FLANGE
15	5217490	1	SHROUD, RH RADIATOR
16	5217489	1	SHROUD, LOWER RADIATOR
17	5217319	1	SHROUD, LH RADIATOR
18	5217492	1	SHROUD, TOP RADIATOR
19	5217364	1	SEAL, SHROUD TO HOPPER RH
20	5217366	1	SEAL, SHROUD TO HOPPER LOWER R
21	5217488	1	SEAL, SHROUD TO HOPPER LOWER
22	5217491	1	SEAL, SHROUD TO HOPPER TOP
23	523743	1	WLD, STANDOFF, BELT-GRD, A7-0
24	21488	2	STRAP, 20", RUBBER W/O HOOK
25	20457	4	S HOOK, 2-1/2"
26	28147	1	ELBOW, 90 DEGREE 4 TO 5
27	21687	1	4" AIR INTAKE HOOD, DONALDSON #X00201
28	26594	1	ELBOW, 90º 4" OD, 12 X 12
29	21447	1	SENDER, 1/2" TEMPERATURE
30	26764	1	STRAIN RELIEF
31	21448	1	OIL PRESSURE SENDER
32	23069	1	CONNECTOR 1/2" JIC X 18MM 8M18F80MX-
33	26241	1	ADAPTER W/O CLAMP SY-KLONE
34	21263	1	PLUG 1/2" JIC (#8)
35	24494	2	CONNECTOR, 1" SAE X 1" MJIC ST
36	31585	16	5/16 X 1 1/2 FENDER WASHER
37	29610	1	1/2" HOSE 48" 1/2" 90º X 1/2 S
38	21427	1	HOSE CLAMP 5"
39	20131	1	COUPLING,1/8 NPT BRASS
40	21125	1	NIPPLE,1/8 NPT HEX BRASS
41	26717	1	GASKET, SAE "A" FLANGE
42	5218056	1	BKT,GA,WTR LEVEL
43	50055	1	MURPHY EL150K1 WTR LEV SW
44	524385	1	MNT, PRE CLEANER, TIER IV JD
45	523728	1	ENDCAP,BLT-GRD, A7-08
46	523727	1	WELD, BLT-GRD, A7, JD-T3-08
47	60831	1	ENGINE HARNESS, JD 115-140 HP

* INDICATES ITEMS NOT SHOW

203Q59 - ENGINE JD-T3-08

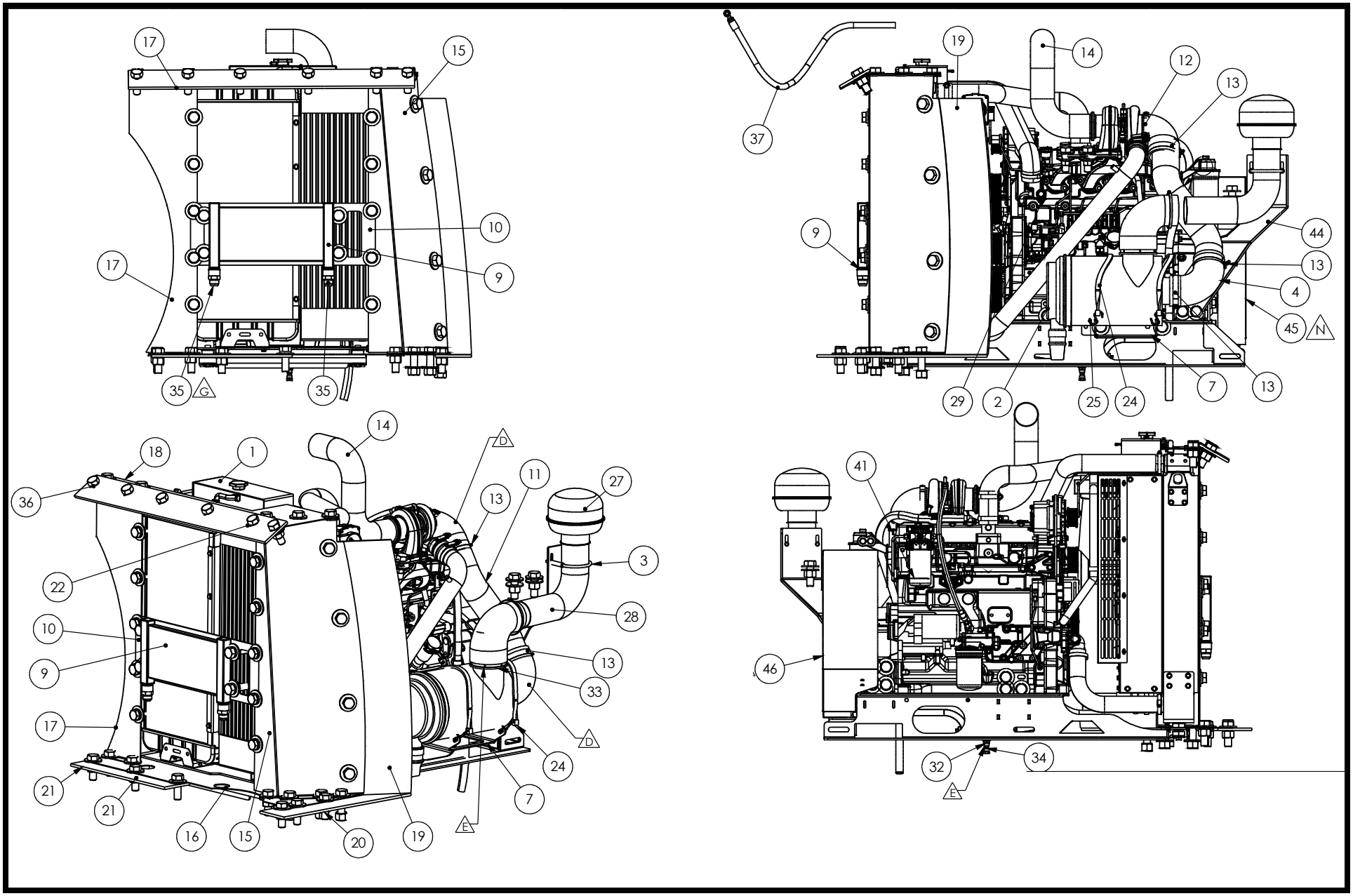

204T19 - POWER MODULE T3. JD140

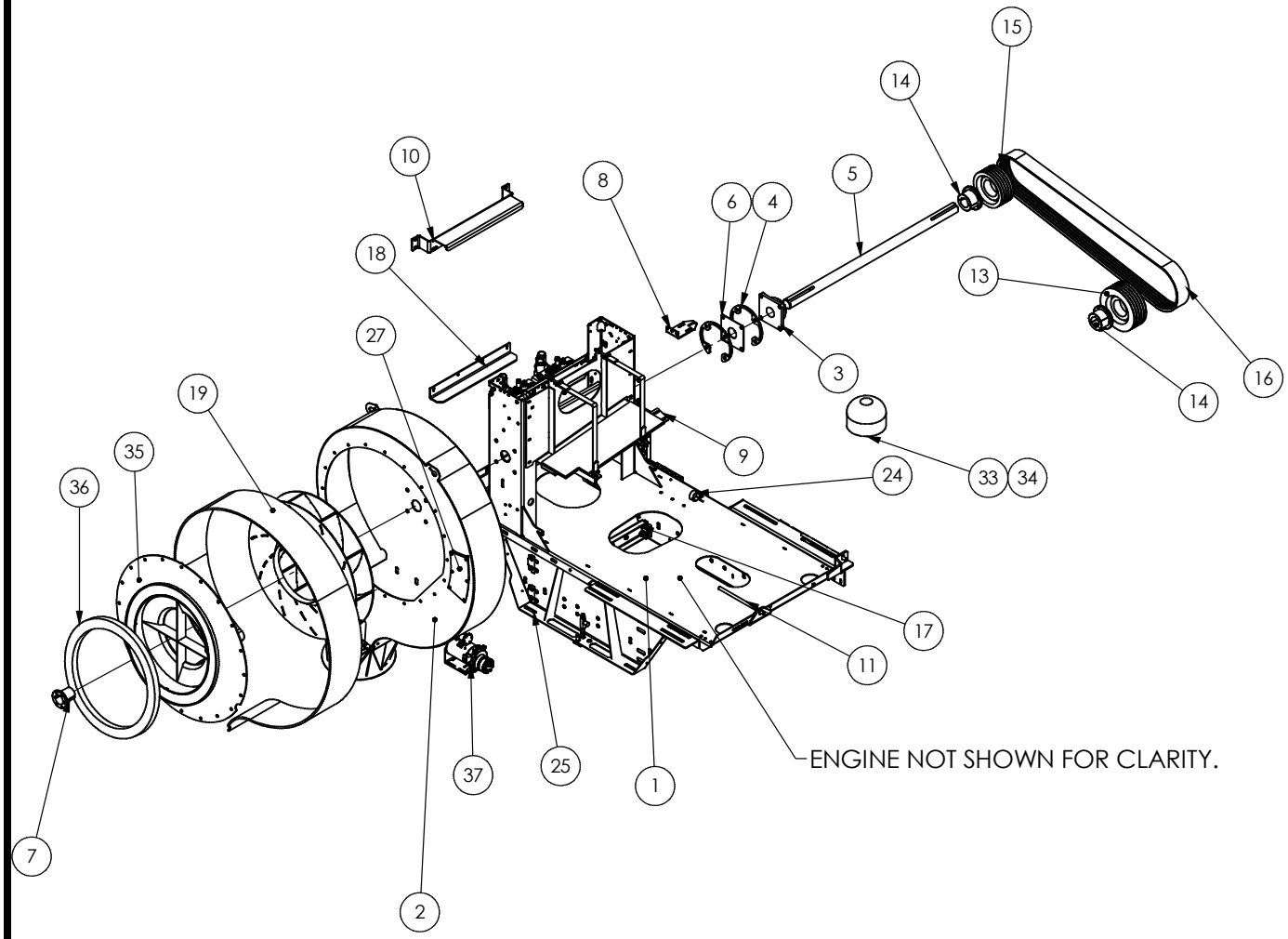

ITEM NO.	PART NUMBER	QTY.	DESCRIPTION
1	524010	1	WELD,PWR-MOD,JD-T3-08
2	522317	1	FAN HOUSING A7000 WELD'T
3	20494	2	FLANGE BEARING, 2.250"
4	5212667	2	SNOWFLAKE BRG SPACER PL
5	3001137	1	SHAFT, FAN, A7000, JD 140 EN
6	5212668	1	WEIR, FAN SHAFT BRG
7	22842	1	TAPERED BUSHING, 2.250 Q2
8	5217143	1	ANGLE BKT. TOP, BLT-GRD.08
9	5217144	1	ANGLE BKT, BOT, BLT-GRD, A7-
10	523741	1	WELD,GUARD,SHAFT,FAN,A7-0
11	5207852	2	JACK SCREW, ENG SKID
12	28687	1	ACTUATOR, 4"
13	61209	1	PULLEY, 5R5V10.3
14	20476	2	TAPERED BUSHING, 2.250 R1
15	21304	1	5R5V85 PULLEY
16	20603	1	BELT, 5/5VX1180 BANDED
17	522854	2	ANCHOR, RAIL, FUEL TANK
18	5214747	1	LEAF,GUARD,SHAFT,FAN,A7-08
19	29339	1	FLAP SET, FAN HOUSING,A7,A8,
20	28431	1	CLAMP, TOP 1/2" HARDLINE
21	28432	2	CLAMP, 1/2" TUBE, HALVES, TW
22	29469	6	CLAMP HALVES, 3/4"
23	29470	3	CLAMP COVER PLATE, 3/4"
24	25092	1	CLAMP, 2" COATED
25	523717	8	TENSION ADJUSTMENT WELDME
26	23402	1	GROMMET,1.5"I.D. X 2.125" O.D
27	5219449	1	PANE,WINDOW, INSP, FAN, A7
28	5221617	1	MOUNT, SENSOR, FAN HOUSIN
29	65568	1	ROD END, 1/4-28 /2458K321
30	5221583	1	ROD, SENSOR, FAN HOUSING
31	5221584	1	LEVER, HALL EFFECT SENSOR, FA
32	65794	1	SENSOR, HALL EFFECT
33	26237	1	SY-KLONE PRECLEANER 9001D
34	60813	1	4-1/2 1" T-BOLT CLAMP
35	523708	1	CVR PLATE, FAN HSNG, A7/A9,
36	5206385	1	SEAL, FAN, A7000 HP
37	204L04	1	HYDRAULICS, STANDARD A7
38	5221406	1	BRACKET, CONTROL BOX MOU
* 39	204L07	1	KIT, HOSE PWR MOD STANDAR
* 40	203P73	1	ENGINE ASSY, A7/A8-JD-T3-08

* INDICATES ITEMS NOT SHOWN

204T19 - POWER MODULE T3. JD140

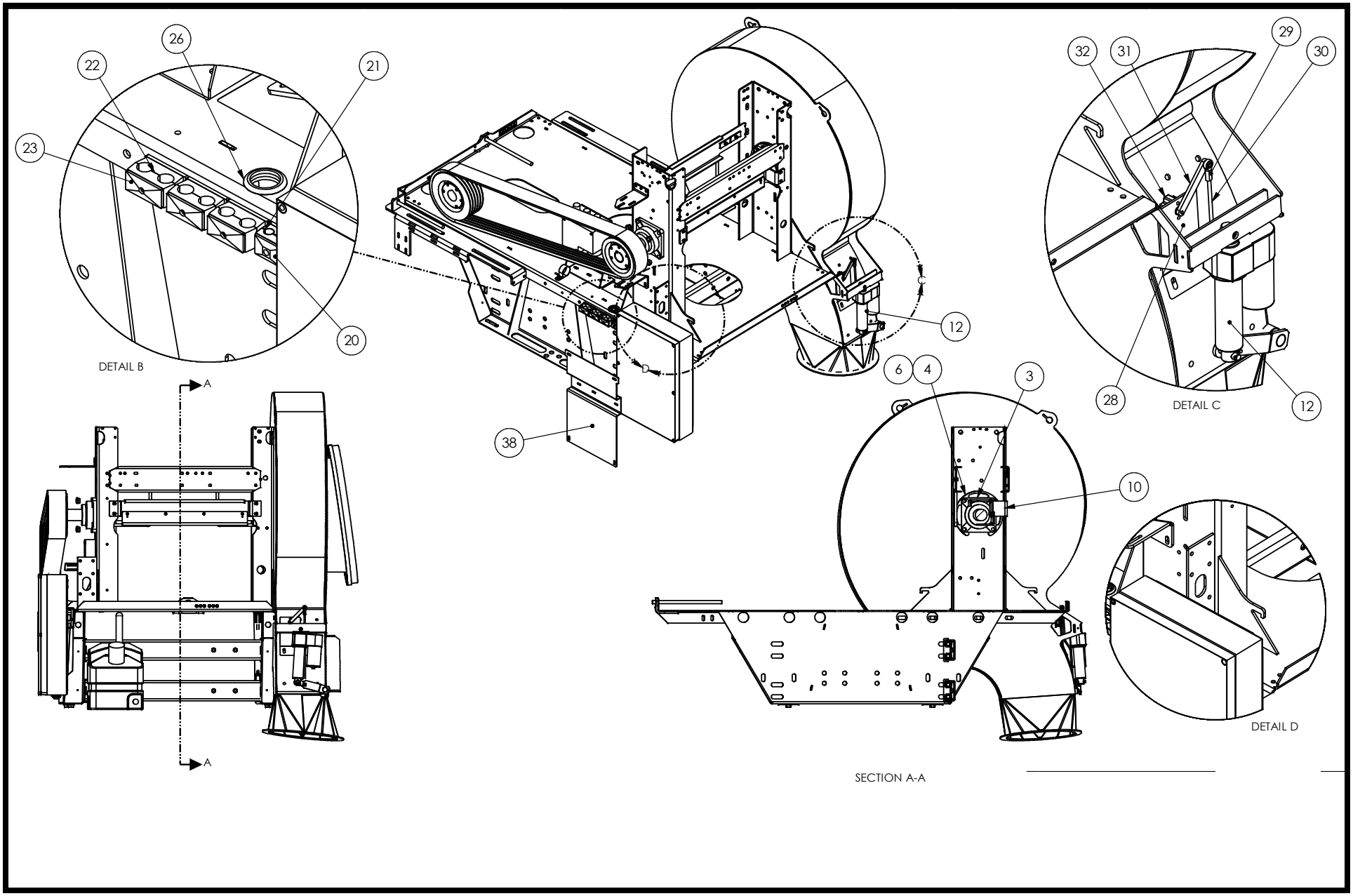

203P73 - ENGINE JD 140HP TIERIII

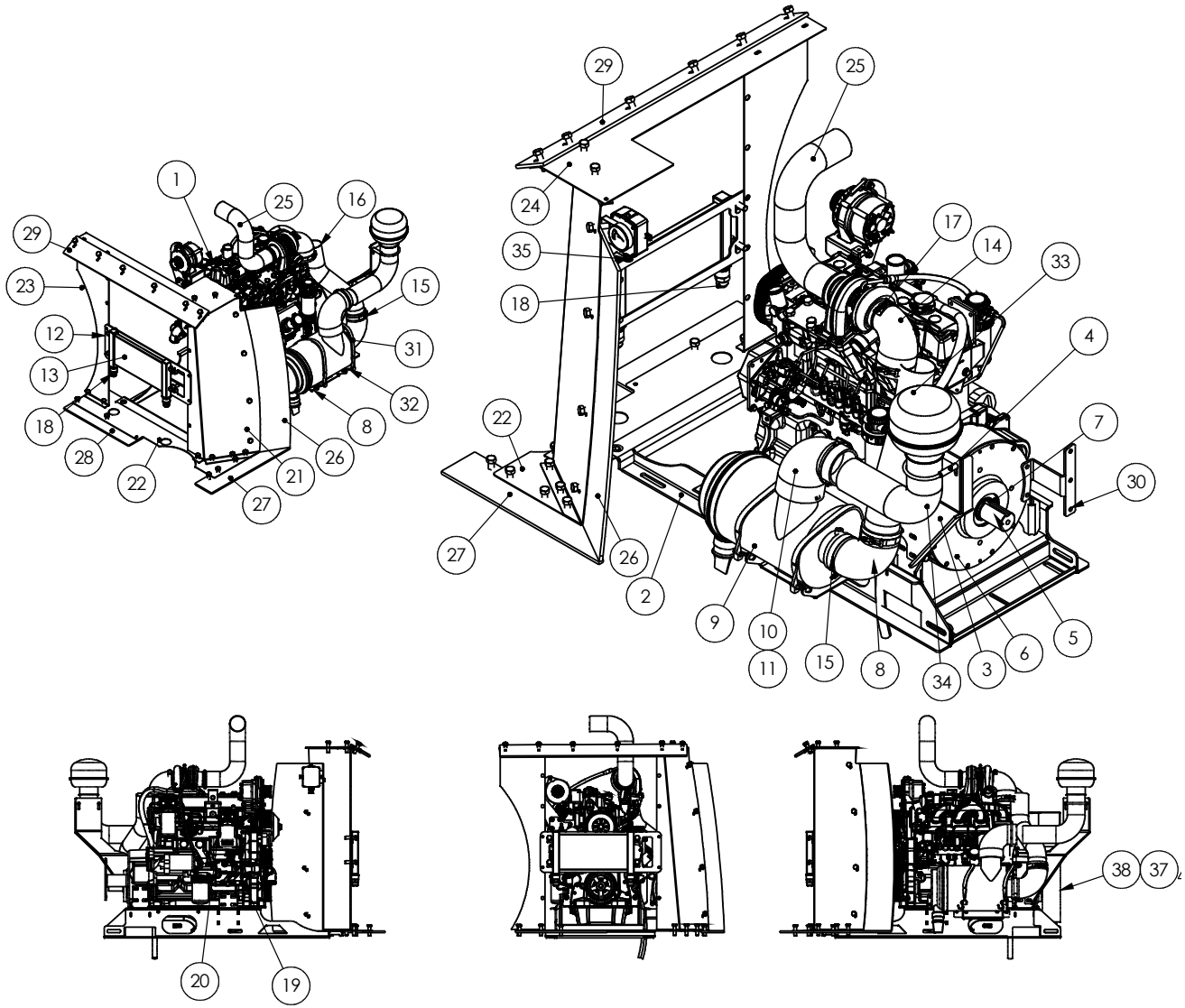

	ITEM NO.	PART NUMBER	QTY.	DESCRIPTION
	1	60636	1	
	2	523712	1	SKID, JD-TIER-III, 08
	3	524385	1	MNT, PRE CLEANER, TIER IV JD
	4	20357	1	CLAMP, 4" U-BOLT
	5	523730	1	STUB SHAFT, JD-T3-08
	6	521269	1	BEARING PLATE
	7	20096	1	SKF BEARING 6212 2RS
	8	5217097	1	BRACKET, AIR CLEANER, JD-T3-08
	9	50633	1	AIR CLEANER ASSY
	10	28147	1	ELBOW, 90 DEGREE 4 TO 5
	11	20824	2	HOSE CLAMP 7"
	12	523715	1	WELD,BAZEL,A7,JD, TIER-III, 08
	13	20405	1	HYD OIL COOLER
	14	60775	1	ELBO, RUBBER, REDUCING, 4" X 3" X 90°
	15	60813	3	4-1/2 | " T-BOLT CLAMP
	16	60776	1	TB,OUTLET,AIR-CLNR,,JD, T-III
	17	60812	1	3-1/2" T-BOLT CLAMP
	18	24494	2	CONNECTOR, 1" SAE X 1" MJIC ST
	19	26636	1	ELBOW, 90% 1 SAE X 1 JIC
	20	22925	2	ELBOW,90,-8 MSAE X -8 MJIC
	21	5217490	1	SHROUD, RH RADIATOR
	22	5217489	1	SHROUD, LOWER RADIATOR
	23	5217319	1	SHROUD, LH RADIATOR
	24	5217492	1	SHROUD, TOP RADIATOR
	25	5217465	1	ELBOW, 3.5" TIER III W/FLANGE
	26	5217364	1	SEAL, SHROUD TO HOPPER RH
	27	5217366	1	SEAL, SHROUD TO HOPPER LOWER R
	28	5217488	1	SEAL, SHROUD TO HOPPER LOWER
	29	5217491	1	SEAL, SHROUD TO HOPPER TOP
	30	523743	1	WLD, STANDOFF, BELT-GRD, A7-0
	31	21488	2	STRAP, 20", RUBBER W/O HOOK
	32	20457	4	S HOOK, 2-1/2"
	33	21687	1	4" AIR INTAKE HOOD, DONALDSON #X0020
	34	26594	1	ELBOW, 90° 4" OD, 12 X 12
	35	26764	1	STRAIN RELIEF
*	36	60831	2	ENGINE HARNESS, JD 115-140 HP
	37	523727	1	WELD, BLT-GRD, A7, JD-T3-08
	38	523728	1	ENDCAP,BLT-GRD, A7-08
*	39	21447	1	SENDER, 1/2" TEMPERATURE
*	40	21448	1	OIL PRESSURE SENDER
*	41	20828	1	HOSE CLAMP 4"

* INDICATED ITEMS NOT SHOWN

204U63 - POWER MODULE, CUMMINS

+523314 WHISPER FAN 32.75” X 5”

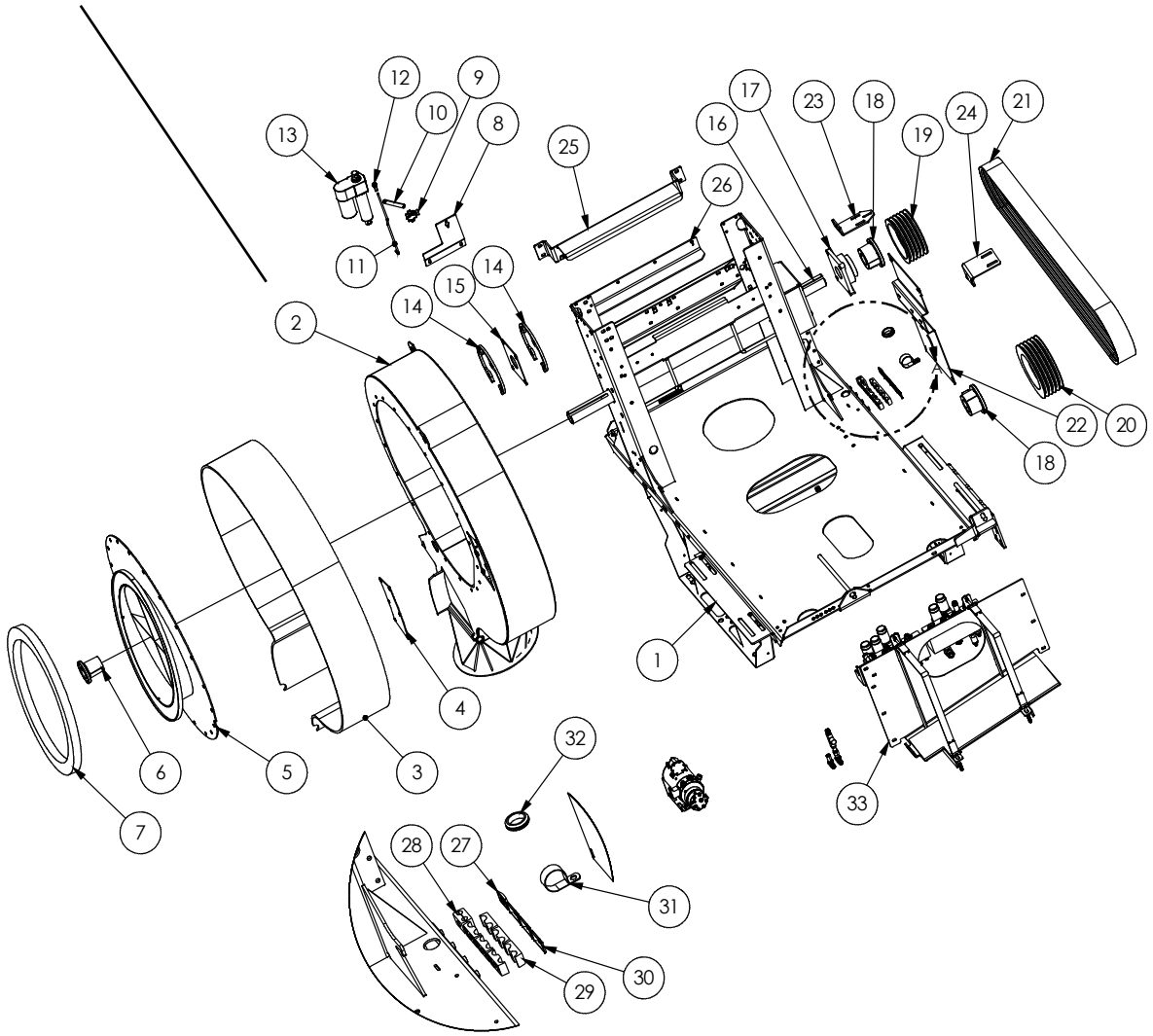

DETAIL A

ITEM NO.	PART NUMBER	DESCRIPTION	Default/ QTY.
1	524010	WELD,PWR-MOD,JD-T3-08	1
2	522317	FAN HOUSING A7000 WELD'T	1
3	29339	FLAP SET, FAN HOUSING,A7,A8,A9	1
4	5219449	PANE,WINDOW, INSP, FAN, A7	1
5	523708	CVR PLATE, FAN HSNG, A7/A9, MS	1
6	22842	TAPERED BUSHING, 2.250 Q2	1
7	5206385	SEAL, FAN, A7000 HP	1
8	5221617	MOUNT, SENSOR, FAN HOUSING	1
9	65794	SENSOR, HALL EFFECT	1
10	5221584	LEVER, HALL EFFECT SENSOR, FAN	1
11	5221583	ROD, SENSOR, FAN HOUSING	1
12	65568	ROD END, 1/4-28 /2458K321	1
13	28687	ACTUATOR, 4"	1
14	5212667	SNOWFLAKE BRG SPACER PL	2
15	5212668	WEIR, FAN SHAFT BRG	1
16	3001137	SHAFT, FAN, A7000, JD 140 ENG	1
17	20494	FLANGE BEARING, 2.250"	2
18	20476	TAPERED BUSHING, 2.250 R1	2
19	21304	5R5V85 PULLEY	1
20	61209	PULLEY, 5R5V10.3	1
21	20603	BELT, 5/5VX1180 BANDED	1
22	5221406	BRACKET, CONTROL BOX MOUNT	1
23	5217143	ANGLE BKT, TOP, BLT-GRD,08	1
24	5217144	ANGLE BKT, BOT, BLT-GRD, A7-08	1
25	523741	WELD,GUARD,SHAFT,FAN,A7-08	1
26	5214747	LEAF,GUARD,SHAFT,FAN,A7-08	1
27	28431	CLAMP, TOP 1/2" HARDLINE	1
28	28432	CLAMP, 1/2" TUBE, HALVES, TWIN	1
29	29469	CLAMP HALVES, 3/4"	6
30	29470	CLAMP COVER PLATE, 3/4"	3
31	25092	CLAMP, 2" COATED	1
32	23402	GROMMET,1.5" I.D. X 2.125" O.D.	1
33	204L04	HYDRAULICS, STANDARD A7	1

ITEMS NOT SHOWN

ITEM NO.	PART NUMBER	DESCRIPTION	Default/ QTY.
34	523717	TENSION ADJUSTMENT WELDMENT	8
35	5223924	ADJUSTER, 5/8-11 X 16	1
36	204U62	KIT, HOSE PWR MOD CMNS	1
37	5207852	JACK SCREW, ENG SKID	1
38	522854	ANCHOR, RAIL, FUEL TANK	2

204U63 - POWER MODULE, CUMMINS

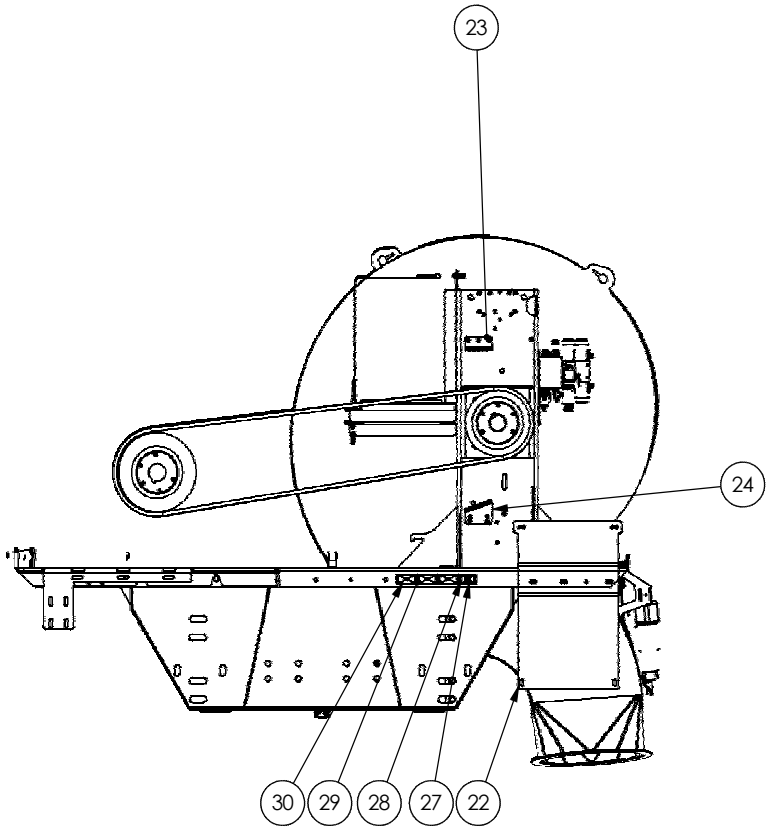

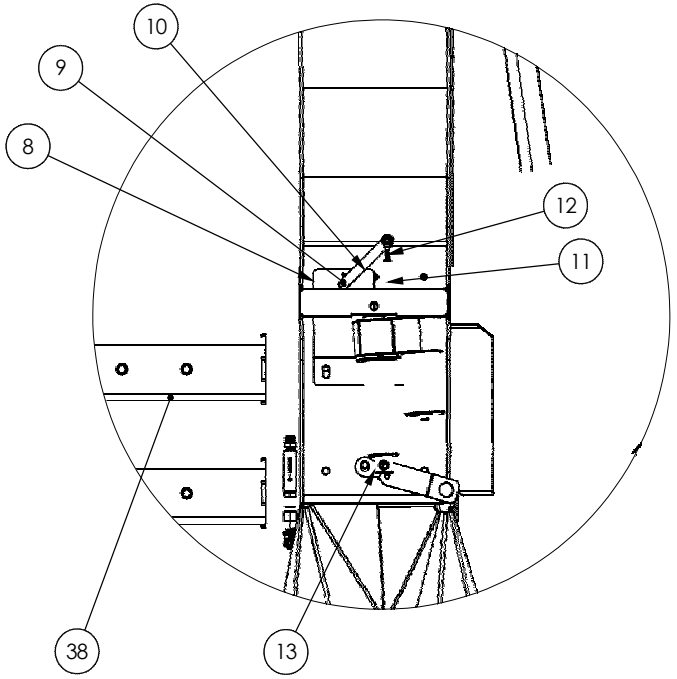

204U58 - ENGINE 3.8L CUMMINS

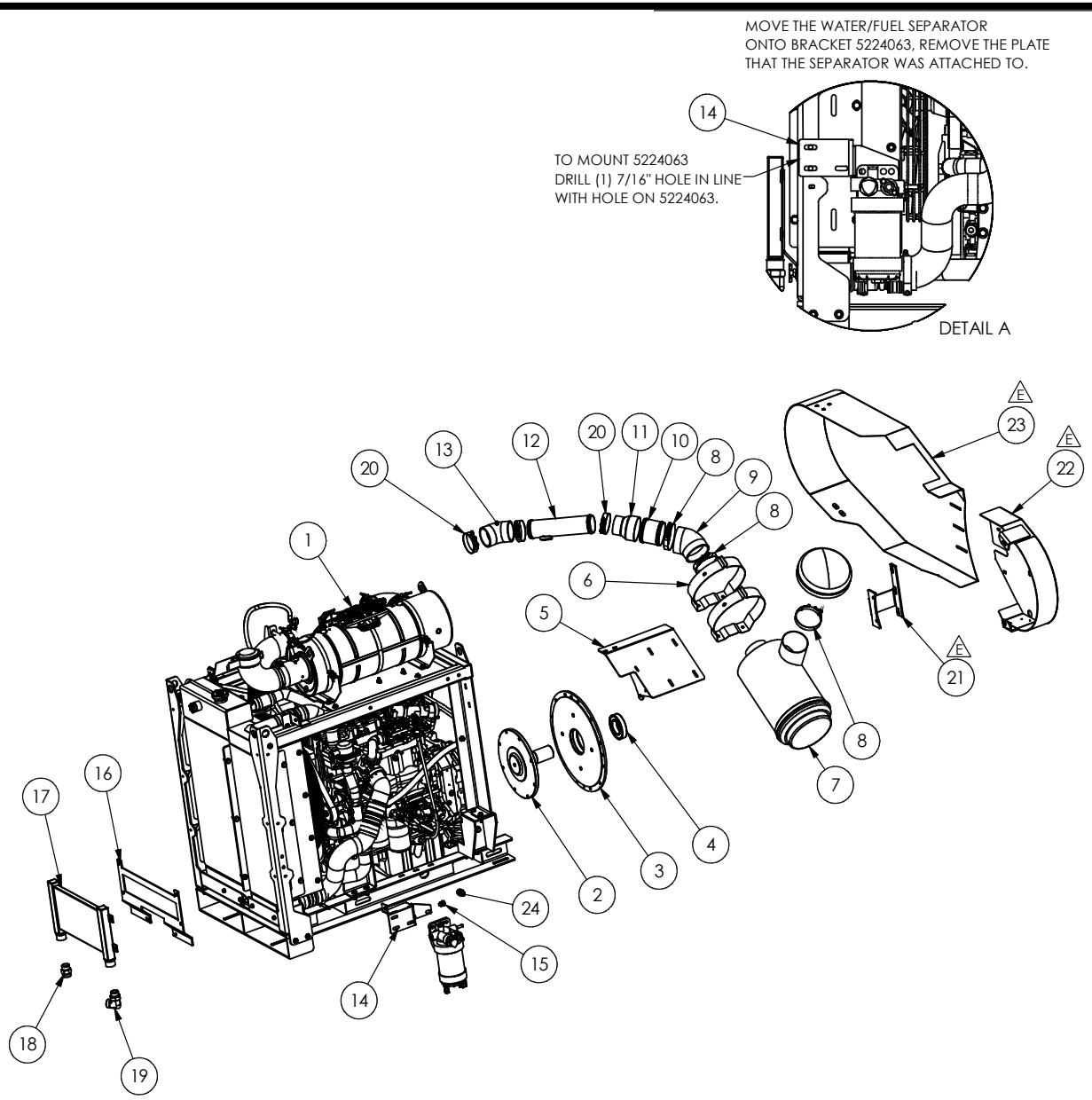

ITEM NO.	PART NUMBER	DESCRIPTION	QTY.
1	65528	ENGINE, CUMMINS F3.8 130HP	1
2	523730	STUB SHAFT, JD-T3-08	1
3	523062	FLYWHEEL COVER	1
4	20096	SKF BEARING 6212 2RS	1
5	525819	MNT, AIR CLEANER, CUMMINS	1
6	21678	AIR FILTER CLAMP G065411	2
7	50633	AIR CLEANER ASSY	1
8	60813	4-1/2|" T-BOLT CLAMP	3
9	21816	4" X 45 DEGREE RUBBER ELBOW	1
10	67774	PIPE, 4" CONNECTOR	1
11	67622	RBR 4"X3" INLINE REDUCER	1
12	67773	PIPE, AC TO TURBO, CMNS 3.8	1
13	67676	3" X 45 DEGREE RUBBER ELBOW	1
14	5224063	MNT,WATER SEP,CUMM 3.8	1
15	21263	PLUG 1/2" JIC (#8)	1
16	5224025	BRACKET, CUMMINS OIL COOLER	1
17	20405	HYD OIL COOLER	1
18	61898	ADAPTER, 1" MORFS X 1" MORB	1
19	61052	ELBOW, 90 1" MORFS X 1" MORB	1
20	60812	3-1/2" T-BOLT CLAMP	3
21	525489	WLDMNT, STNDOFF, BLT-GRD, A8 C	1
22	525488	ENDCAP,BLT-GRD, A8 CUMMINS	1
23	525966	BELT GUARD, UPPER, CUMMINS	1
24	68145	ADPTR, M22X1.5 W/RING STL ZN	1

PARTS BELOW NOT SHOWN

ITEM NO.	PART NUMBER	DESCRIPTION	QTY.
25	29610	DRAIN HOSE	1

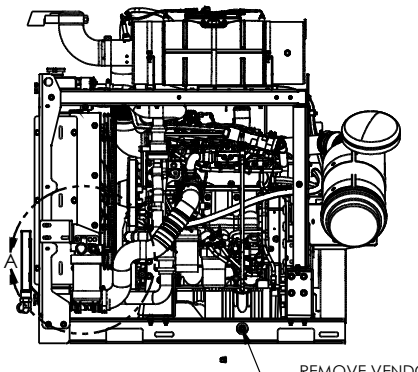

24 REMOVE VENDOR SUPPLIED PLUG. REPLACE WITH 68145 ADAPTER AND 29610 HOSE.

204T13 - HYDRAULIC TANK, CUMMINS

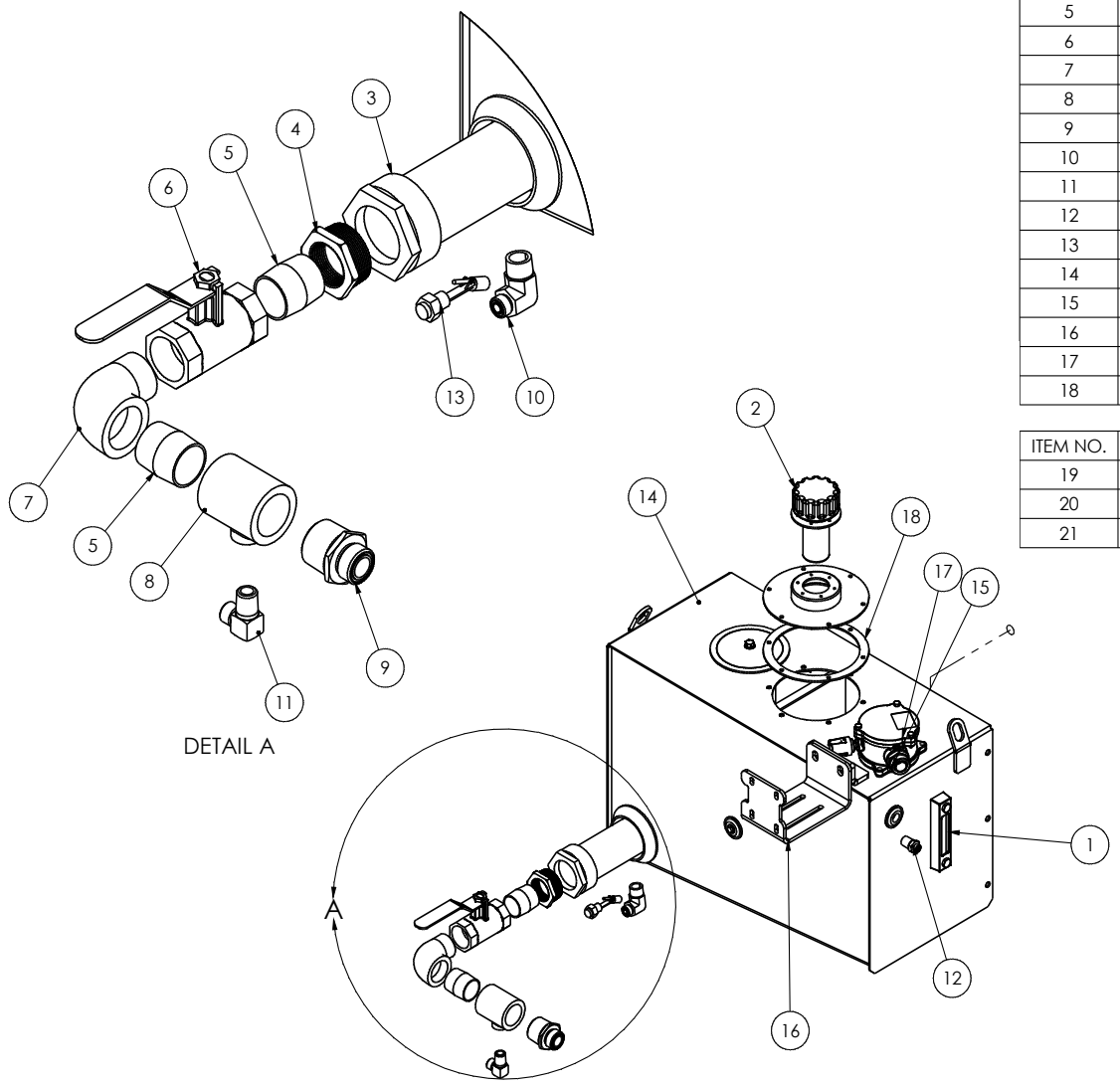

ITEM NO.	PART NUMBER	DESCRIPTION	QTY.
1	20110	SIGHT GAUGE	1
2	20390	FILLER\BREATHER CAP	1
3	22232	FILTER,3" STRAINER	1
4	22228	BUSHING 2 X 1-1/2 BLK	1
5	22229	1.50" PIPE NIPPLE, CLOSE, IRON	2
6	27158	BALL VALVE 1-1/2	1
7	20570	ELBOW, STREET, 1/1-2"	1
8	20402	TEE, REDUCING, 1-1/2" X 1/2"	1
9	65634	ADAPTER, 1 MORFS X 1-1/2 NPT	1
10	61372	ADAPTER, 1/2" MORFS X 3/4" MPT	1
11	65635	ELBOW, 90° 1/2 MORFS X 1/2 NPT	1
12	61053	1/4" MORFS X 1/2 MP STRAIGHT	1
13	22641	SWITCH,LIQUID LEVEL	1
14	67303	TANK, HYD, 22.5 GA, A8T, CUMMI	1
15	61032	1" MORFS X 1" MP STRAIGHT	1
16	5217855	BRACKET, OIL FILTER	1
17	62196	FILTER, IN TANK RETURN 40 GPM	1
18	67965	GASKET, HYDRAULIC TANK 8"	1

ITEMS BELOW NOT SHOWN

ITEM NO.	PART NUMBER	DESCRIPTION	QTY.
19	67619	TEMP TRNSDCR 1/2NPT 1"LNG PRB	1
20	24310	SENDER, HYDRAULIC FILTER RESTRICTION	1
21	24311	BOOT, SENDER FILTER RESTRICTION IND	1

Schematics

7

SK-2096 - HOUR METER

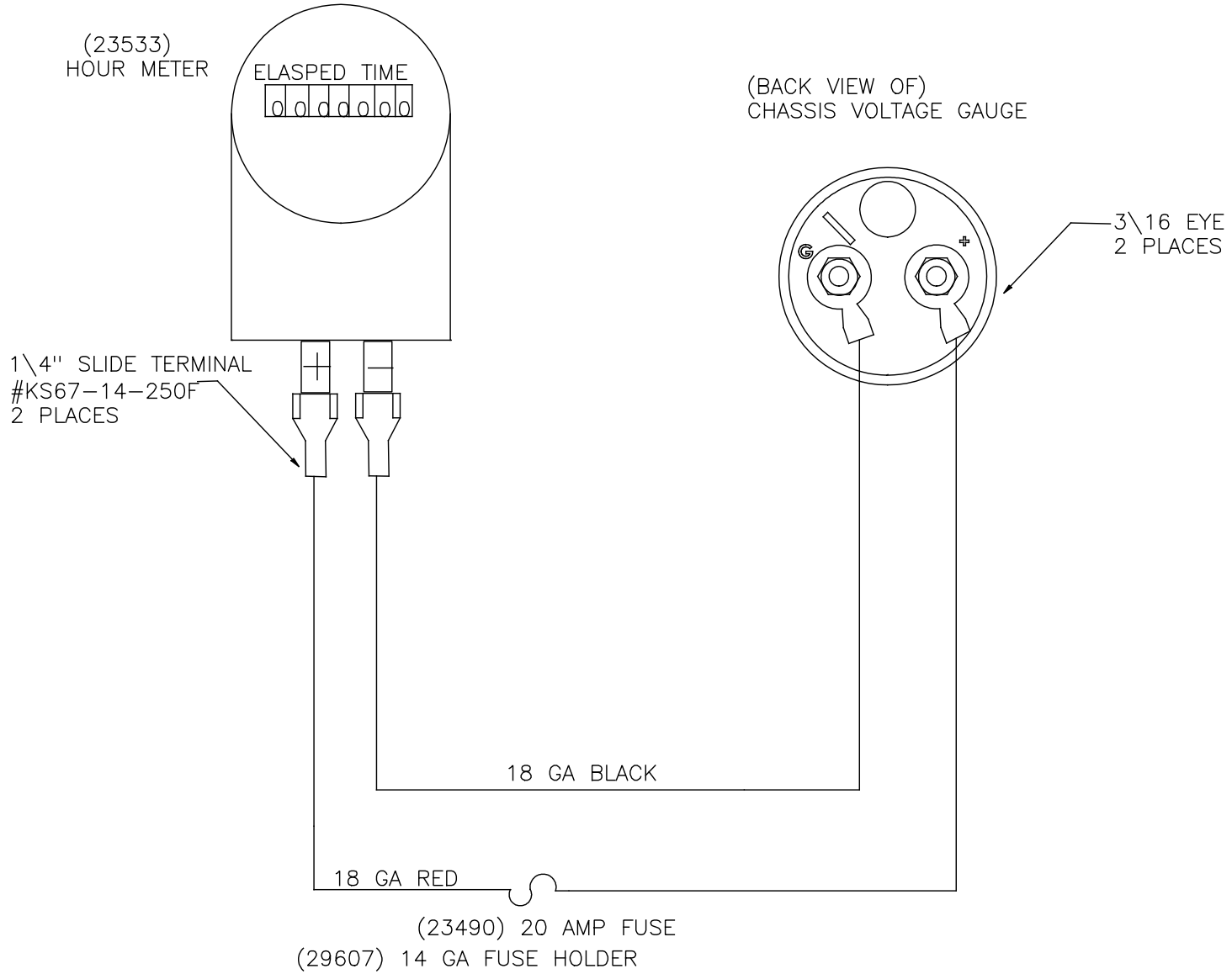

SK-2439 - ENGINE BAY THROTTLE

MAIN HARNESS MODIFICATIONS

1. ON THE MAIN HARNESS, APPROXIMATELY 8" FROM THE JUNCTION CONNECTOR TO THE CPU BOX, IDENTIFY THE FOLLOWING CIRCUITS:
   - A. THROTTLE DOWN (18 GAUGE BROWN/BLACK)
   - B. THROTTLE UP (18 GAUGE TAN)
   - C. 12V SENSOR POWER (18 GAUGE RED)
   - D. MAIN GROUND (18 GAUGE BLACK)
2. SPLICE APPROXIMATELY 7 FEET OF WIRE, TO THE INDICATED CIRCUITS, PER THE SCHEMATIC.
3. TERMINATE THE WIRE ENDS, AT THE THROTTLE SWITCH, USING 0.250" FEMALE QUICK DISCONNECT HEAT SHRINK INSULATED TERMINALS.
4. COVER THE NEW WIRES WITH LOOM.
5. SEE SCHEMATIC FOR CONNECTIONS TO THROTTLE SWITCH.

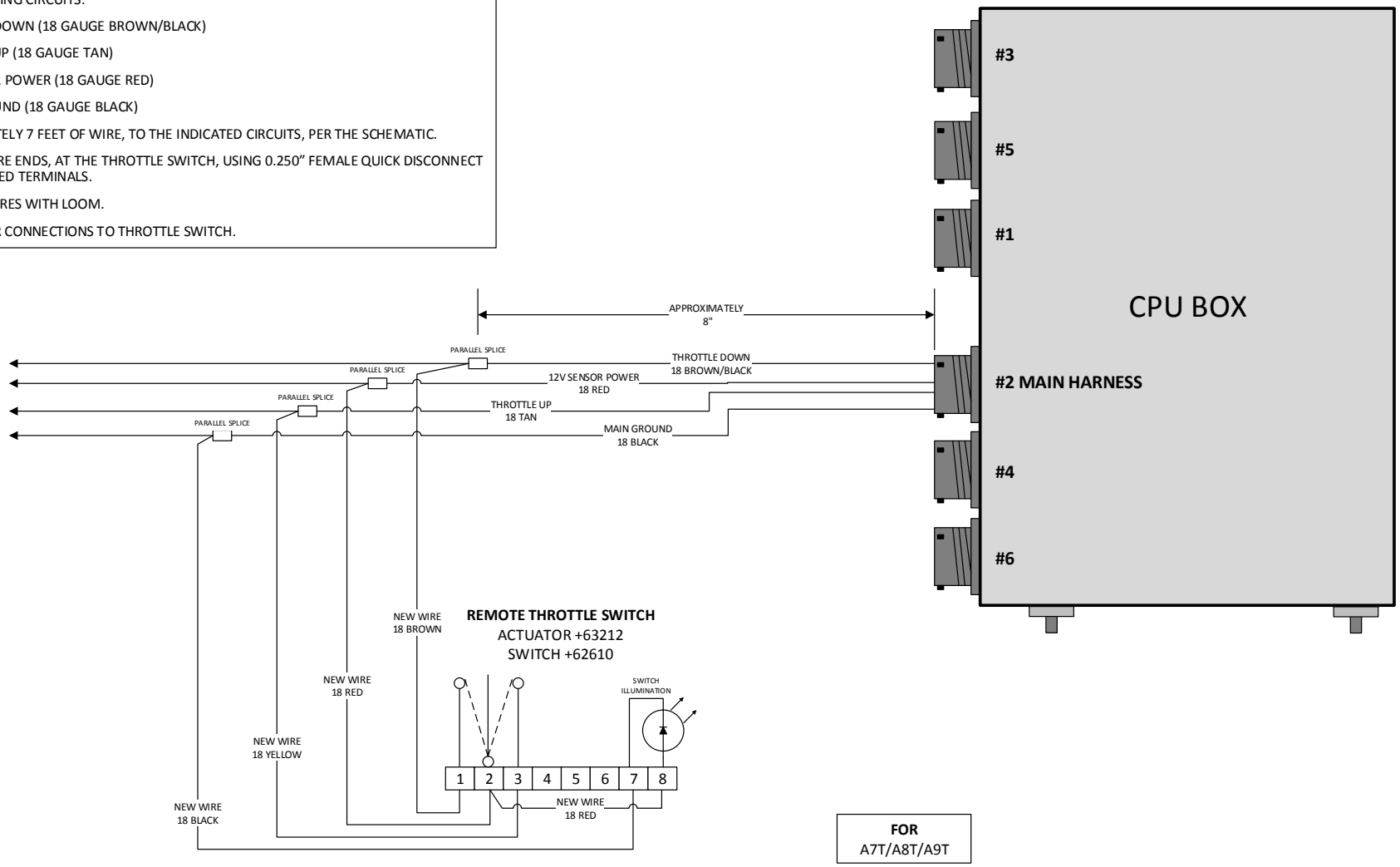

FOR
A7T/A8T/A9T

65653 / 66037 - Console Wiring

	HDP26 -24-31ST-L017		
	Console		
PIN	gauge	color	name
1	18	BLUE	PARK NEUTRAL
2	18	BLUE	ALARM
3	18	BLUE	spare3
4	18	BLUE	spare4
5	18	RED	Console power 12V
6	18	RED/BK	Key start
7	18	RED/BU	Key On
8	18	YEL	JS Scissor up
9	18	YEL	JS Scissor Dwn
10	18	YEL	JS Dump/Tilt UP
11	18	YEL	JS Dump/Tilt Down
12	14	Red	CHASSIS KSW POWER
13	18	White	Broom in head UP
14	18	White	Broom in head DOWN
15	18	White	side blast
16	18	White	side blast
17	18	White	Power flap open
18	18	White	Power flap close
19	14	Red/wh	12V option
20	18	GRN	Spare5
21	18	GRN	Spare6
22	18	White	Spare7
23	18	YEL	j1939 CAN H
24	18	GRN	j1939 CAN L
25	18	YEL	CAN open CAN H
26	18	GRN	CAN open CAN L
27	18	White	PC COM TX
28	18	White	PC COM RX
29	18	White	PC COM GND
30	14	Black	Ground sensor
31	14	Black	Main ground

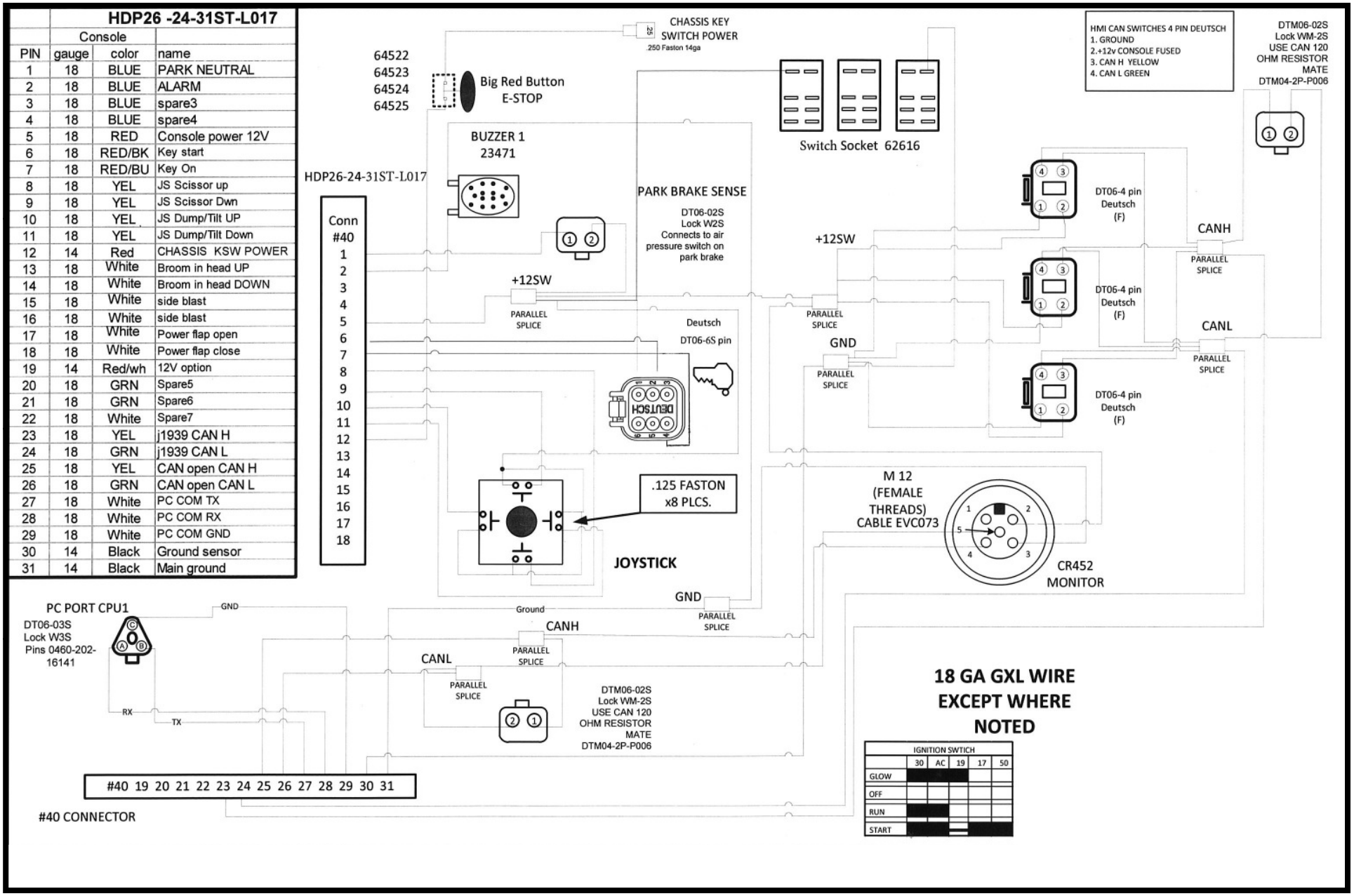

A8 CPU Box Wiring

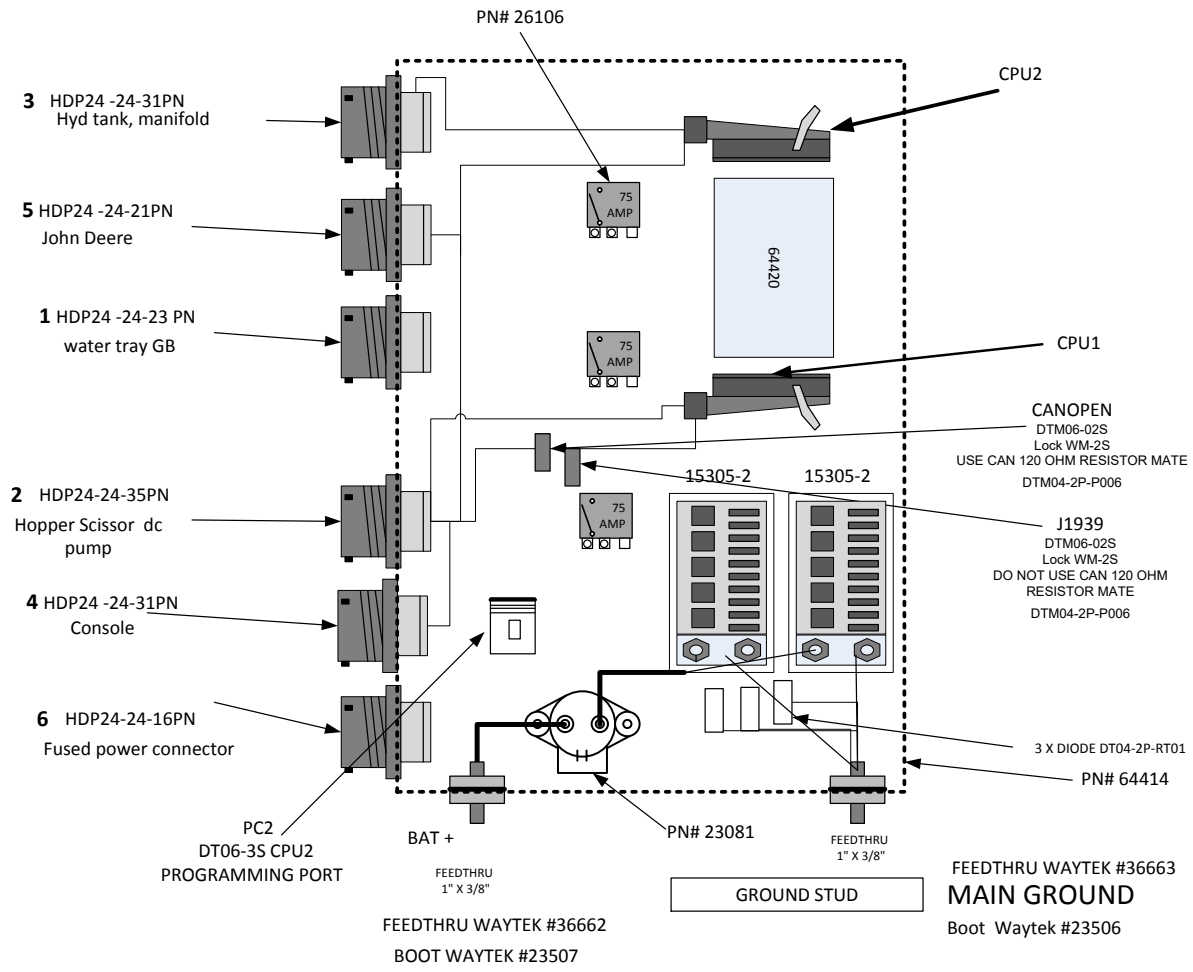

ALL HDP24 XX-XXXX CONNECTORS:
DEUTSCH PN#
2414-001-2486 WAVE WASHER
2411-001-2405 NUT
16-04477 GASKET

Wiring

FUSE BLOCK LABELS
SCHWARZE PART NUMBER 65952

FUSE PANEL #1

	R1	F1	25 AMP LGB GEO
LGB GEO EXT			
		F2	10 AMP CPU1 VBBS
	R2	F3	25 AMP 12 OPTION
LGB GEO RET			
		F4	20 AMP CPU1 VBBR
	R3	F5	25 AMP RGB GEO
RGB GEO EXT			
		F6	20 AMP CPU1 VBBO
	R4	F7	15 AMP CNSL PWR
RGB GEO RET			
		F8	10 AMP CPU2 VBBS
	R5	F9	30 AMP HOP SHKR
OPEN			
		F10	20 AMP CPU2 VBBR

65952 REV A

FUSE PANEL #2

	R1	F1	30 AMP WTR PMP 1
OPEN			
		F2	20 AMP CPU2 VBBO
	R2	F3	30 AMP WTR PMP 2
ALT FLASH			
		F4	15 AMP ALT FLASH
	R3	F5	25 AMP LF BLDR
LF BLDR OP			
		F6	25 AMP OPT 2
	R4	F7	25 AMP OPT 1 & 3
LF BLDR CS			
		F8	15 AMP BEACON
	R5	F9	25 AMP BOOM PWR
BEACON			
		F10	10 AMP SNSR PWR

65952 REV A

CPU Power Wiring

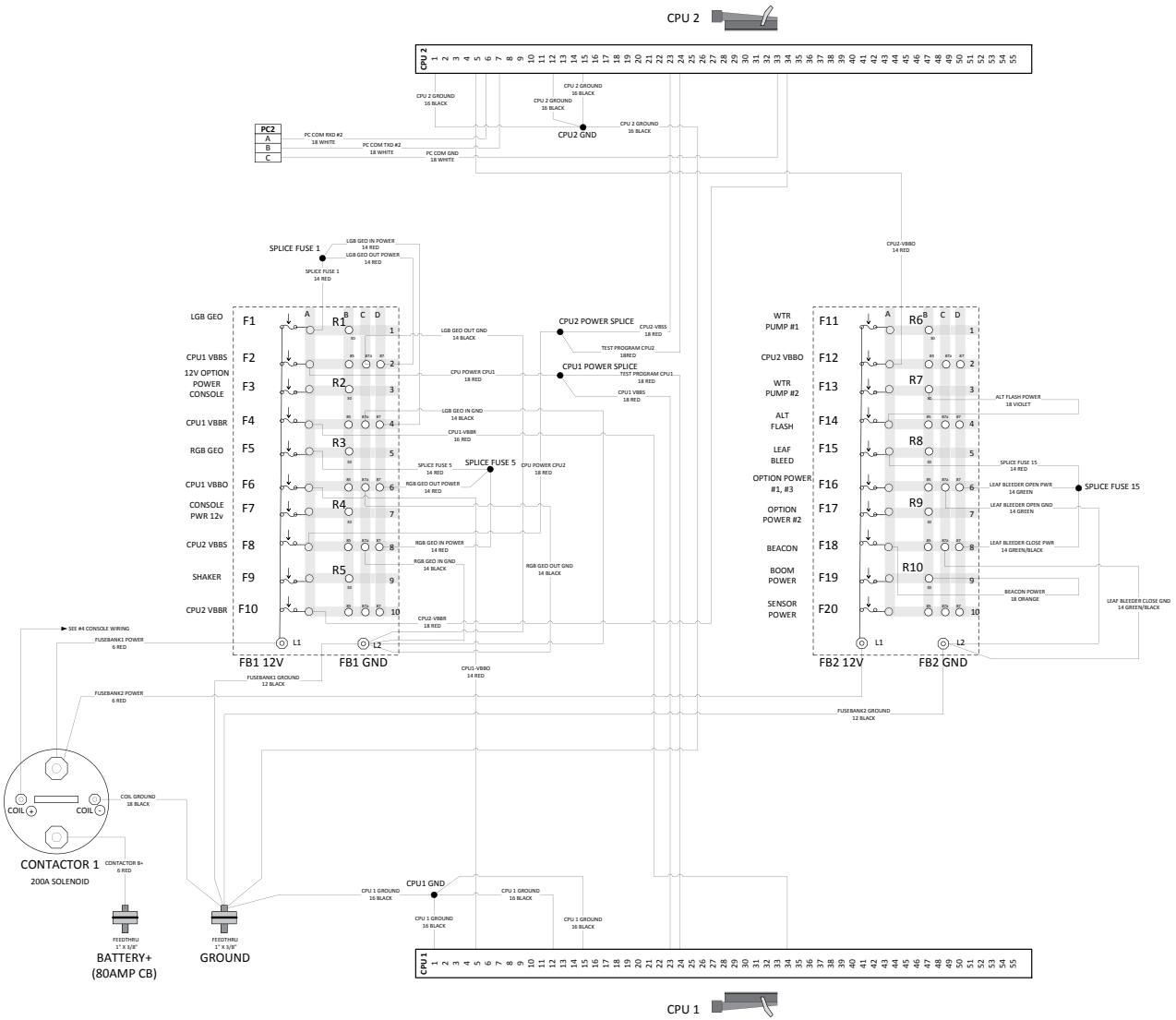

END 1	END1				END2	END2
CONNECTOR	ALT NAME	COLOR	GAUGE	NAME	CONNECTED TO	ALT NAME
CONTACTOR SW		RED	6	FUSEBANK POWER	FB1 12V	FB1-L1
CONTACTOR SW		RED	6	FUSEBANK2 POWER	FB2 12V	FB2-L1
GROUND		RED	12	FUSEBANK1 GND	FB1 GND	FB1-L2
GROUND		RED	12	FUSEBANK2 GND	FB2GND	FB2-L2
R1-87	FB1-D2	RED	14	LGB GEO OUT POWER	SPLICE FUSE 1	
R1-87A	FB1-C2	RED	14	LGB GEO OUT GND	GROUND	
CPU1 POWER SPLICE		RED	18	CPU1 VBBS	CPU1-23	
R2-87	FB1-D4	RED	14	LGB GEO IN POWER	SPLICE FUSE 1	
R2-87A	FB1-C4	RED	14	LGB GEO IN GND	GROUND	
FUSE4	FB1-A4	RED	18	CPU1 VBBR	CPU1-34	
R3-87	FB1-D6	RED	14	RGB GEO OUT POWER	SPLICE FUSE 5	
R3-87A	FB1-C6	RED	14	RGB GEO OUT GND	GROUND	
FUSE6	FB1-A6	RED	14	CPU1-VBBO	CPU1-05	
R4-87	FB1-D8	RED	14	RGB GEO IN POWER	SPLICE FUSE 5	
R4-87A	FB1-C8	RED	14	RGB GEO IN GND	GROUND	
CPU2 POWER SPLICE	FB1-A8	RED	14	CPU2-VBBS	CPU2-23	
FUSE10	FB1-A10	RED	18	CPU2-VBBR	CPU2-34	
FUSE12	FB2-A2	RED	14	CPU2-VBBO	CPU2-05	
R8-87	FB2-D6	GREEN	14	LEAF BLEEDER OPEN PWR	SPLICE FUSE15	
R8-87A	FB2-C6	GREEN	14	LEAF BLEEDER OPEN GND	GROUND	
R9-87	FB2-D8	GN/BK	14	LEAF BLEEDER CLOSE PWR	SPLICE FUSE15	
R9-87A	FB2-C8	GN/BK	14	LEAF BLEEDER CLOSE GND	GROUND	
GROUND STUD		BLACK	16	CPU1 GROUND	CPU1-1	
GROUND STUD		BLACK	16	CPU1 GROUND	CPU1-12	
GROUND STUD		BLACK	16	CPU1 GROUND	CPU1-15	
GROUND STUD		BLACK	16	CPU2 GROUND	CPU2-1	
GROUND STUD		BLACK	16	CPU2 GROUND	CPU2-12	
GROUND STUD		BLACK	16	CPU2 GROUND	CPU2-15	
CONTACTOR SW		RED	6	CONTACTOR B+	BATTERY +	
CONTACTOR GND		BLK	18	COIL GROUND	GROUND	
CPU1 POWER SPLICE		RED	18	TEST PROGRAM CPU1	CPU1-24	
FUSE2	FB1-A2	RED	18	CPU POWER CPU1	CPU1 POWER SPLICE	
CPU2POWER SPLICE		RED	18	TEST PROGRAM CPU2	CPU2-24	
FUSE8	FB1-A8	RED	18	CPU POWER CPU2	CPU2POWER SPLICE	
FUSE 1	FB1-A1	RED	14	SPLICE FUSE 1	SPLICE FUSE 1	
FUSE 5	FB1-A5	RED	14	SPLICE FUSE 5	SPLICE FUSE 5	
FUSE 15	FB2-A5	RED	14	SPLICE FUSE15	SPLICE FUSE15	
FUSE 18	FB2-A8	OR	18	BEACON POWER	R10-30	FB2-B9
FUSE 14	FB2-A4	VL	18	ALT FLASH POWER	R7-30	FB2-B3
PC2	PC2-C	WHITE	18	PC COM GND	CPU2-33	
PC2	PC2-A	WHITE	18	PC COM RXD #2	CPU2-6	
PC2	PC2-B	WHITE	18	PC COM TXD #2	CPU2-7	

REV	DESCRIPTION	DATE	BY
A	CIRCUIT "CPU1-VBBR" WAS 18 GAUGE	10/27/16	RAG

#1 Water Tray CPU Box Wiring

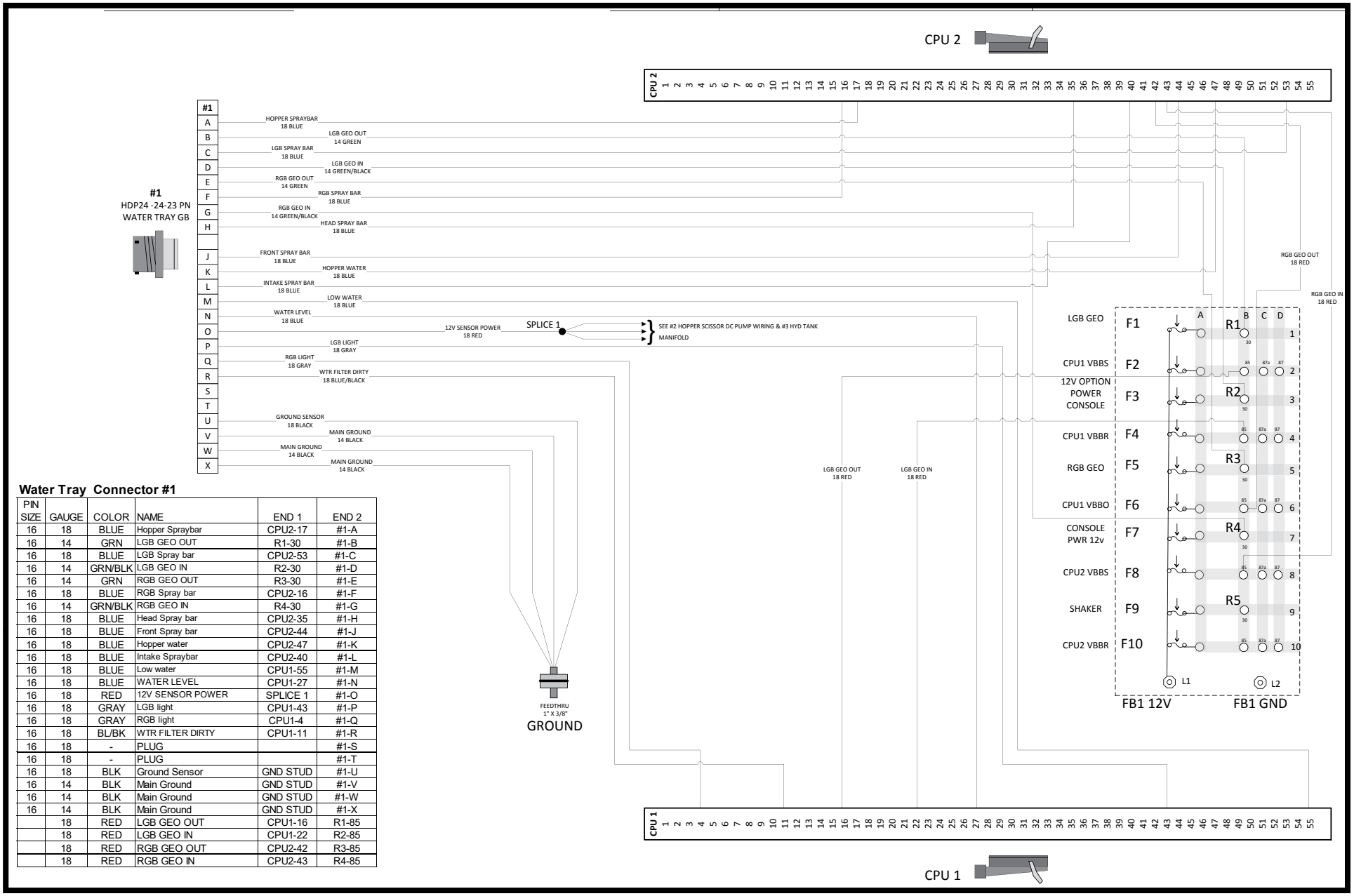

Water Tray Connector #1

PIN SIZE	GAUGE	COLOR	NAME	END 1	END 2
16	18	BLUE	Hopper Spraybar	CPU2-17	#1-A
16	14	GRN	LGB GEO OUT	R1-30	#1-B
16	18	BLUE	LGB Spray bar	CPU2-53	#1-C
16	14	GRN/BLK	LGB GEO IN	R2-30	#1-D
16	14	GRN	RGB GEO OUT	R3-30	#1-E
16	18	BLUE	RGB Spray bar	CPU2-16	#1-F
16	14	GRN/BLK	RGB GEO IN	R4-30	#1-G
16	18	BLUE	Head Spray bar	CPU2-35	#1-H
16	18	BLUE	Front Spray bar	CPU2-44	#1-J
16	18	BLUE	Hopper water	CPU2-47	#1-K
16	18	BLUE	Intake Spraybar	CPU2-40	#1-L
16	18	BLUE	Low water	CPU1-55	#1-M
16	18	BLUE	WATER LEVEL	CPU1-27	#1-N
16	18	RED	12V SENSOR POWER	SPLICE 1	#1-O
16	18	GRAY	LGB light	CPU1-43	#1-P
16	18	GRAY	RGB light	CPU1-4	#1-Q
16	18	BL/BK	WTR FILTER DIRTY	CPU1-11	#1-R
16	18	-	PLUG		#1-S
16	18	-	PLUG		#1-T
16	18	BLK	Ground Sensor	GND STUD	#1-U
16	14	BLK	Main Ground	GND STUD	#1-V
16	14	BLK	Main Ground	GND STUD	#1-W
16	14	BLK	Main Ground	GND STUD	#1-X
	18	RED	LGB GEO OUT	CPU1-16	R1-85
	18	RED	LGB GEO IN	CPU1-22	R2-85
	18	RED	RGB GEO OUT	CPU2-42	R3-85
	18	RED	RGB GEO IN	CPU2-43	R4-85

#2 Hopper Scissor DC Pump CPU Box Wiring

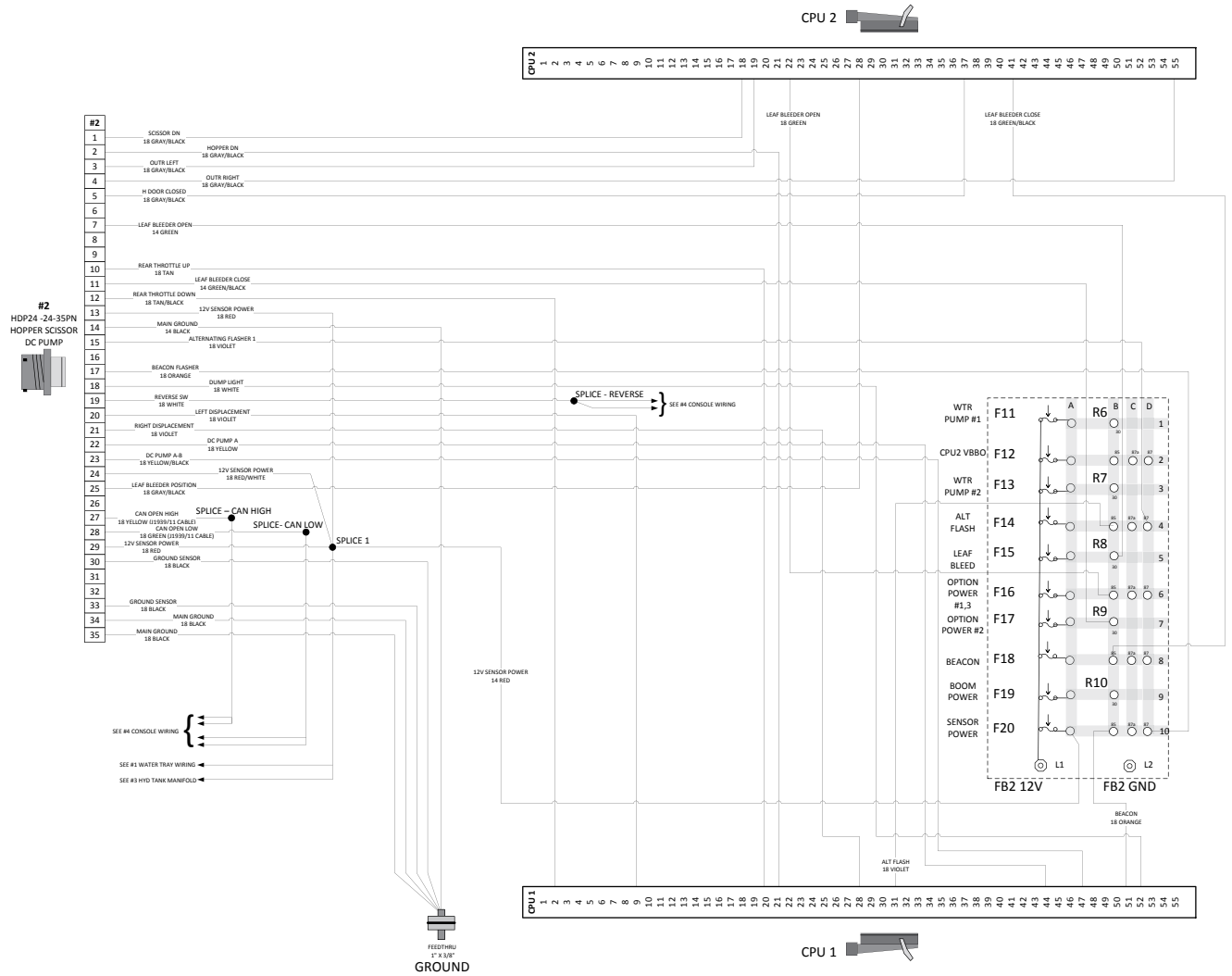

Hopper Scissor Connector #2 END1 END2

PIN SIZE	GAUGE	COLOR	name	CPU PIN	FROM
20	18	GRAY/BLK	SCISSOR DN	CPU2-18	#2-1
20	18	GRAY/BLK	HOPPER DN	CPU1-21	#2-2
20	18	GRAY/BLK	OUTR LEFT	CPU2-19	#2-3
20	18	GRAY/BLK	OUTR RIGHT	CPU2-55	#2-4
20	18	GRAY/BLK	H DOOR CLOSED	CPU2-37	#2-5
20		-	PLUG		#2-6
16	14	GRN	Leaf bleeder open	R8-30	#2-7
20		-	PLUG		#2-8
20		-	PLUG		#2-9
20	18	TAN	Rear Throttle up	CPU1-20	#2-10
16	14	GRN/BLK	Leaf bleeder close	R9-30	#2-11
20	18	TAN/BLK	Rear Throttle down	CPU1-2	#2-12
20	18	RED	12v sensor power	SPLICE1	#2-13
16	14	BLK	Main Ground	GROUND	#2-14
20	18	VIO	Alternating flasher1	R7-87	#2-15
20		-	PLUG		#2-16
20	18	OR	Beacon flasher	R10-87	#2-17
20	18	WHT	Dump light	CPU1-52	#2-18
20	18	WHT	Reverse sw	CPU1-19	#2-19
20	18	VIO	Left Displacement	CPU1-9	#2-20
20	18	VIO	Right Displacement	CPU1-28	#2-21
20	18	YEL	DC PUMP A	CPU1-44	#2-22
20	18	YEL/BLK	DC PUMP A-B	CPU1-47	#2-23
20	18	RED/WHT	12V SENSOR POWER	SPLICE 1	#2-24
20	18	GRAY/BLK	LEAF BLEEDER POSITION	CPU2-28	#2-25
20		-	PLUG		#2-26
20	18	YEL	CAN open CAN H	SPLICE CAN-H	#2-27
20	18	GRN	CAN open CAN L	SPLICE CAN-L	#2-28
20	18	RED	12V SENSOR POWER	SPLICE1	#2-29
20	18	BLK	Ground sensor	GROUND	#2-30
20		-	PLUG		#2-31
20		-	PLUG		#2-32
20	18	BLK	Ground Sensor	GROUND	#2-33
20	18	BLK	Main Ground	GROUND	#2-34
20	18	BLK	Main Ground	GROUND	#2-35
-	18	GREEN	LEAF BLEEDER OPEN	CPU2-22	R8-85
-	18	GREEN	LEAF BLEEDER CLOSE	CPU2-41	R9-85
-	14	RED	12V SENSOR POWER	SPLICE 1	F20
-	18	ORANGE	BEACON	CPU1-51	R10-85
-	18	VIOLET	ALT FLASH	CPU1-31	R7-85

#3 Hyd Tank Manifold CPU Box Wiring

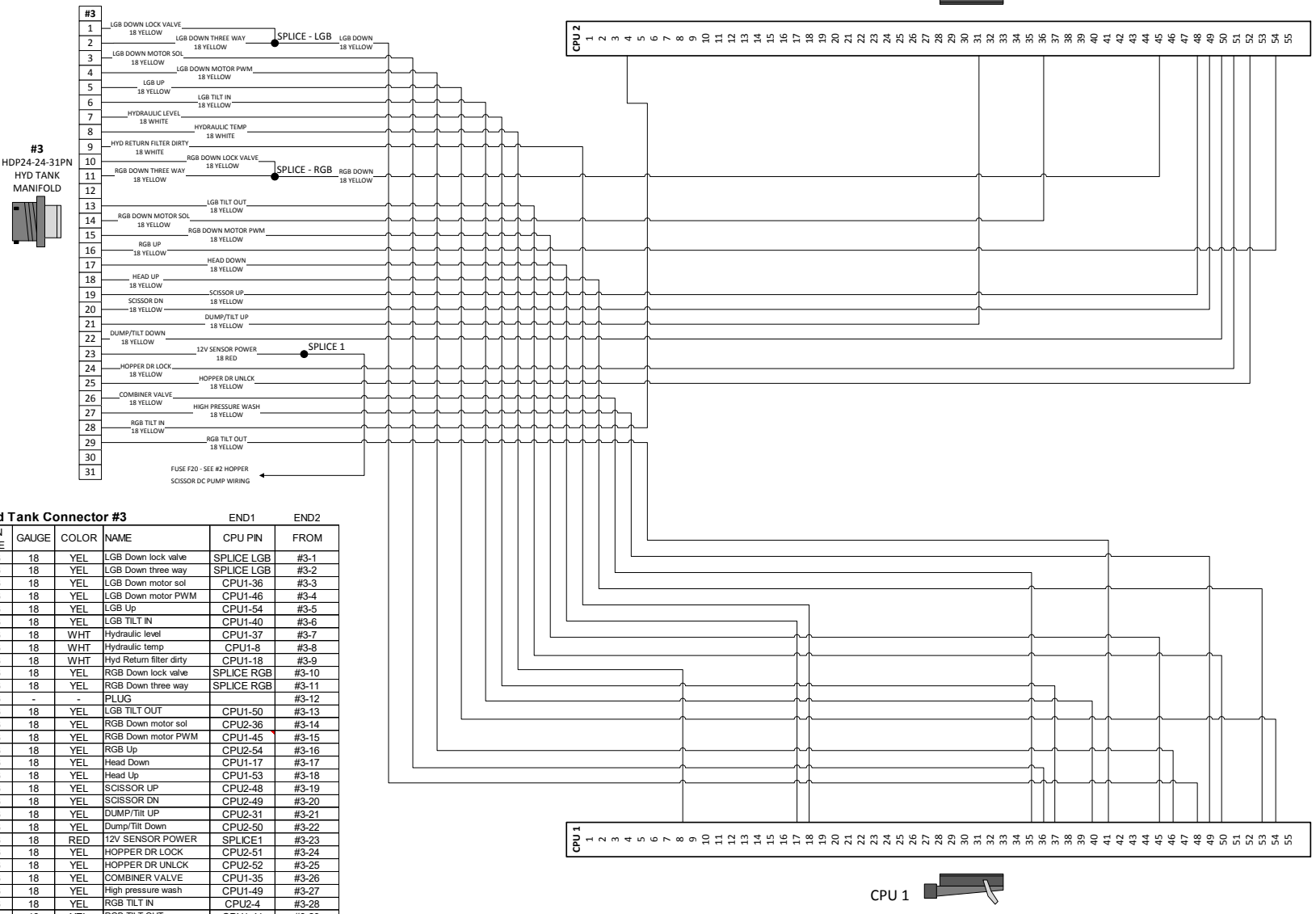

Hyd Tank Connector #3

PIN SIZE	GAUGE	COLOR	NAME	END1 CPU PIN	END2 FROM
16	18	YEL	LGB Down lock valve	SPLICE LGB	#3-1
16	18	YEL	LGB Down three way	SPLICE LGB	#3-2
16	18	YEL	LGB Down motor sol	CPU1-36	#3-3
16	18	YEL	LGB Down motor PWM	CPU1-46	#3-4
16	18	YEL	LGB Up	CPU1-54	#3-5
16	18	YEL	LGB TILT IN	CPU1-40	#3-6
16	18	WHT	Hydraulic level	CPU1-37	#3-7
16	18	WHT	Hydraulic temp	CPU1-8	#3-8
16	18	WHT	Hyd Return filter dirty	CPU1-18	#3-9
16	18	YEL	RGB Down lock valve	SPLICE RGB	#3-10
16	18	YEL	RGB Down three way	SPLICE RGB	#3-11
16	-	-	PLUG		#3-12
16	18	YEL	LGB TILT OUT	CPU1-50	#3-13
16	18	YEL	RGB Down motor sol	CPU2-36	#3-14
16	18	YEL	RGB Down motor PWM	CPU1-45	#3-15
16	18	YEL	RGB Up	CPU2-54	#3-16
16	18	YEL	Head Down	CPU1-17	#3-17
16	18	YEL	Head Up	CPU1-53	#3-18
16	18	YEL	SCISSOR UP	CPU2-48	#3-19
16	18	YEL	SCISSOR DN	CPU2-49	#3-20
16	18	YEL	DUMP/Tilt UP	CPU2-31	#3-21
16	18	YEL	Dump/Tilt Down	CPU2-50	#3-22
16	18	RED	12V SENSOR POWER	SPLICE1	#3-23
16	18	YEL	HOPPER DR LOCK	CPU2-51	#3-24
16	18	YEL	HOPPER DR UNLCK	CPU2-52	#3-25
16	18	YEL	COMBINER VALVE	CPU1-35	#3-26
16	18	YEL	High pressure wash	CPU1-49	#3-27
16	18	YEL	RGB TILT IN	CPU2-4	#3-28
16	18	YEL	RGB TILT OUT	CPU1-41	#3-29
16	-	-	PLUG		#3-30
16	-	-	PLUG		#3-31
	18	YEL	LGB DOWN	CPU1-48	SPLICE LGB
	18	YEL	RGB DOWN	CPU2-45	SPLICE RGB

#4 Console CPU Box Wiring

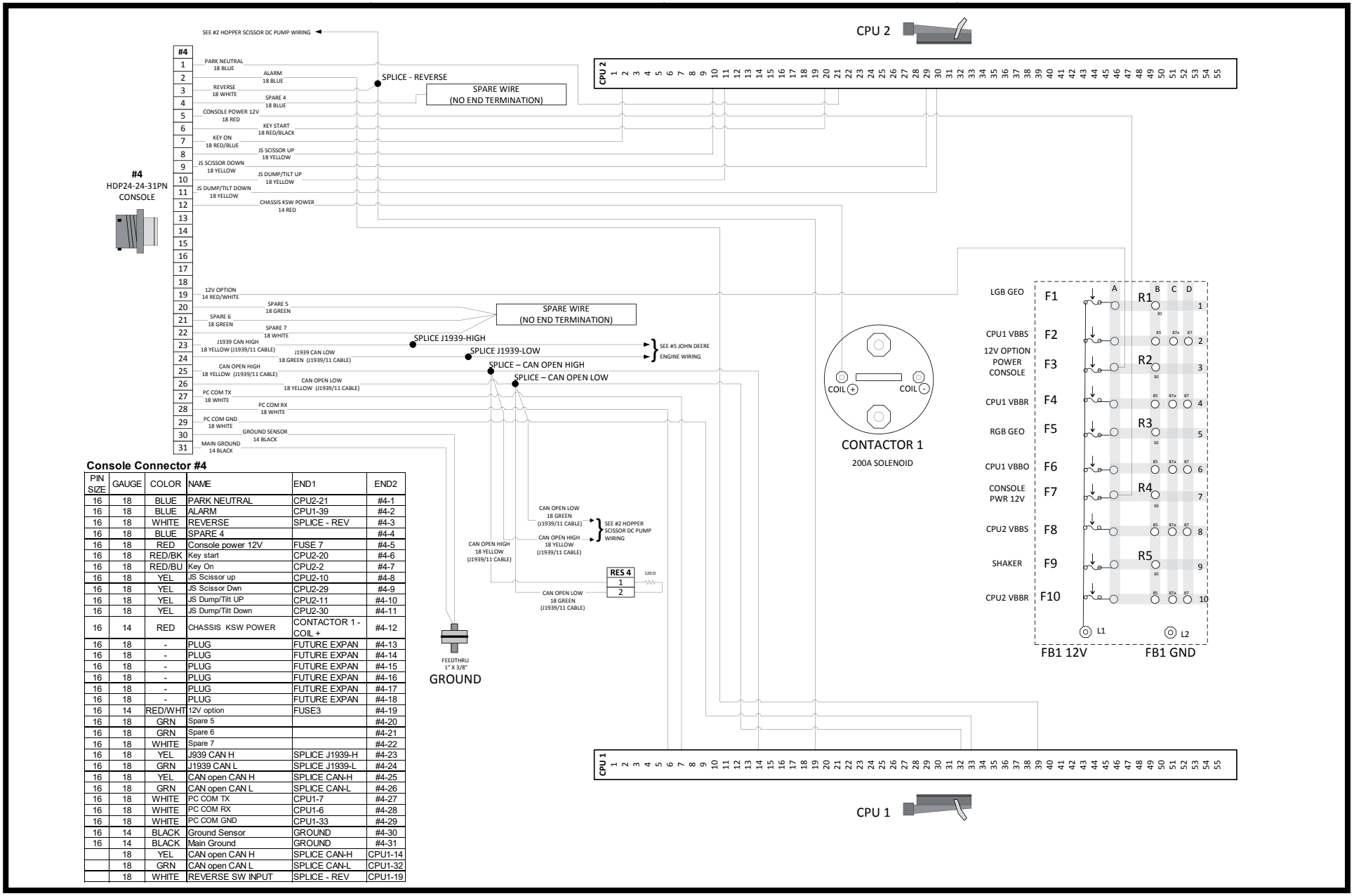

Console Connector #4

PIN SIZE	GAUGE	COLOR	NAME	END1	END2
16	18	BLUE	PARK NEUTRAL	CPU2-21	#4-1
16	18	BLUE	ALARM	CPU1-39	#4-2
16	18	WHITE	REVERSE	SPLICE - REV	#4-3
16	18	BLUE	SPARE 4		#4-4
16	18	RED	Console power 12V	FUSE 7	#4-5
16	18	RED/BK	Key start	CPU2-20	#4-6
16	18	RED/BU	Key On	CPU2-2	#4-7
16	18	YEL	JS Scissor up	CPU2-10	#4-8
16	18	YEL	JS Scissor Dwn	CPU2-29	#4-9
16	18	YEL	JS Dump/Tilt UP	CPU2-11	#4-10
16	18	YEL	JS Dump/Tilt Down	CPU2-30	#4-11
16	14	RED	CHASSIS KSW POWER	CONTACTOR 1 - COIL +	#4-12
16	18	-	PLUG	FUTURE EXPAN	#4-13
16	18	-	PLUG	FUTURE EXPAN	#4-14
16	18	-	PLUG	FUTURE EXPAN	#4-15
16	18	-	PLUG	FUTURE EXPAN	#4-16
16	18	-	PLUG	FUTURE EXPAN	#4-17
16	18	-	PLUG	FUTURE EXPAN	#4-18
16	14	RED/WHT	12V option	FUSE3	#4-19
16	18	GRN	Spare 5		#4-20
16	18	GRN	Spare 6		#4-21
16	18	WHITE	Spare 7		#4-22
16	18	YEL	J939 CAN H	SPLICE J1939-H	#4-23
16	18	GRN	J1939 CAN L	SPLICE J1939-L	#4-24
16	18	YEL	CAN open CAN H	SPLICE CAN-H	#4-25
16	18	GRN	CAN open CAN L	SPLICE CAN-L	#4-26
16	18	WHITE	PC COM TX	CPU1-7	#4-27
16	18	WHITE	PC COM RX	CPU1-6	#4-28
16	18	WHITE	PC COM GND	CPU1-33	#4-29
16	14	BLACK	Ground Sensor	GROUND	#4-30
16	14	BLACK	Main Ground	GROUND	#4-31
	18	YEL	CAN open CAN H	SPLICE CAN-H	CPU1-14
	18	GRN	CAN open CAN L	SPLICE CAN-L	CPU1-32
	18	WHITE	REVERSE SW INPUT	SPLICE - REV	CPU1-19

#5 John Deere Engine CPU Box Wiring

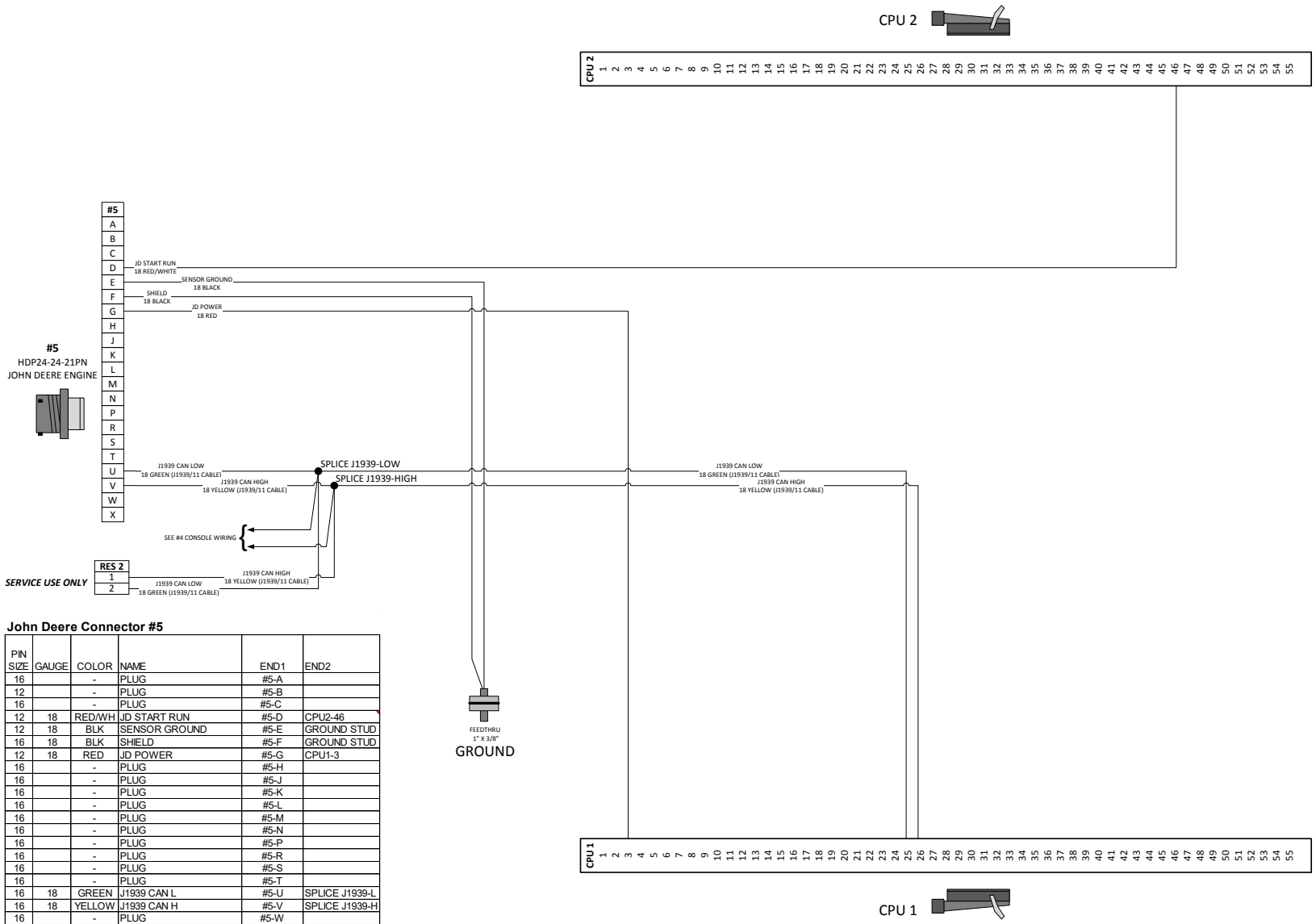

John Deere Connector #5

PIN SIZE	GAUGE	COLOR	NAME	END1	END2
16		-	PLUG	#5-A	
12		-	PLUG	#5-B	
16		-	PLUG	#5-C	
12	18	RED/WH	JD START RUN	#5-D	CPU2-46
12	18	BLK	SENSOR GROUND	#5-E	GROUND STUD
16	18	BLK	SHIELD	#5-F	GROUND STUD
12	18	RED	JD POWER	#5-G	CPU1-3
16		-	PLUG	#5-H	
16		-	PLUG	#5-J	
16		-	PLUG	#5-K	
16		-	PLUG	#5-L	
16		-	PLUG	#5-M	
16		-	PLUG	#5-N	
16		-	PLUG	#5-P	
16		-	PLUG	#5-R	
16		-	PLUG	#5-S	
16		-	PLUG	#5-T	
16	18	GREEN	J1939 CAN L	#5-U	SPLICE J1939-L
16	18	YELLOW	J1939 CAN H	#5-V	SPLICE J1939-H
16		-	PLUG	#5-W	
16		-	PLUG	#5-X	
	18	GREEN	J1939 CAN L	CPU1-25	SPLICE J1939-L
	18	YELLOW	J1939 CAN H	CPU1-26	SPLICE J1939-H
	18	GREEN	J1939 CAN L	RES2 -2	SPLICE J1939-L
	18	YELLOW	J1939 CAN H	RES2-1	SPLICE J1939-H

#6 Fused Power Connector CPU Box Wiring

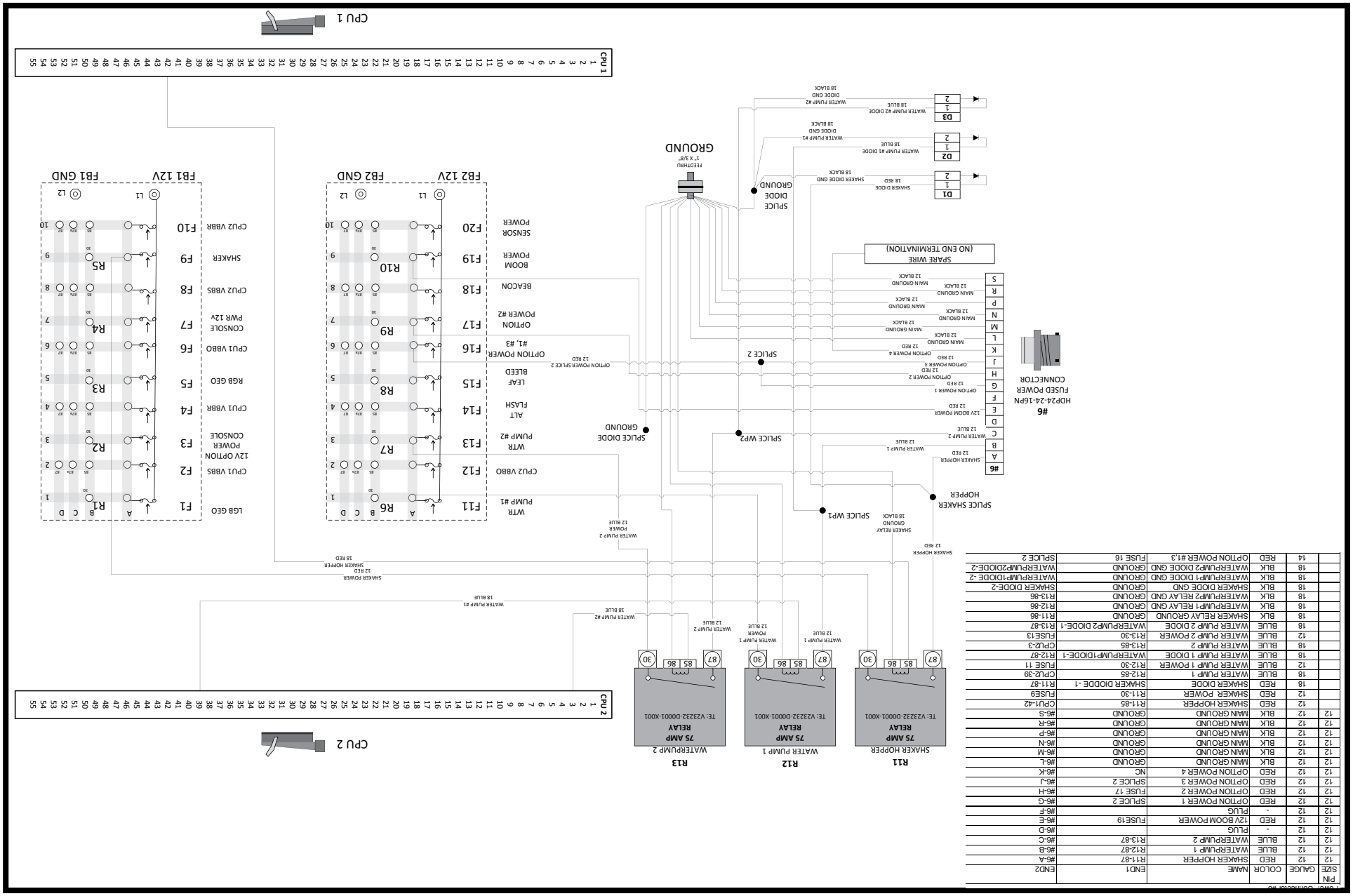

Power Connector #6					
PIN SIZE	GAUGE	COLOR	NAME	END1	END2
	12	RED	SHAKER HOPPER	R11-87	#6-A
	12	BLUE	WATERPUMP 1	R12-87	#6-B
	12	BLUE	WATERPUMP 2	R13-87	#6-C
	12	-	PLUG		#6-D
	12	-	PLUG		#6-E
	12	RED	12V BOOM POWER	FUSE19	#6-F
	12	RED	OPTION POWER 1	SPLICE 2	#6-G
	12	RED	OPTION POWER 2	FUSE 17	#6-H
	12	RED	OPTION POWER 3	SPLICE 2	#6-J
	12	RED	OPTION POWER 4	NC	#6-K
	12	BLK	MAIN GROUND	GROUND	#6-L
	12	BLK	MAIN GROUND	GROUND	#6-M
	12	BLK	MAIN GROUND	GROUND	#6-N
	12	BLK	MAIN GROUND	GROUND	#6-P
	12	BLK	MAIN GROUND	GROUND	#6-R
	12	BLK	MAIN GROUND	GROUND	#6-S
12	12	BLK	MAIN GROUND	GROUND	#6-S
12	12	BLK	MAIN GROUND	GROUND	#6-R
12	12	BLK	MAIN GROUND	GROUND	#6-P
12	12	BLK	MAIN GROUND	GROUND	#6-N
12	12	BLK	MAIN GROUND	GROUND	#6-M
12	12	BLK	MAIN GROUND	GROUND	#6-L
12	12	RED	OPTION POWER 4	NC	#6-K
12	12	RED	OPTION POWER 3	SPLICE 2	#6-J
12	12	RED	OPTION POWER 2	FUSE 17	#6-H
12	12	RED	OPTION POWER 1	SPLICE 2	#6-G
12	12	-	PLUG		#6-F
12	12	RED	12V BOOM POWER	FUSE19	#6-E
12	12	-	PLUG		#6-D
12	12	BLUE	WATERPUMP 2	R13-87	#6-C
12	12	BLUE	WATERPUMP 1	R12-87	#6-B
12	12	RED	SHAKER HOPPER	R11-87	#6-A
	14	RED	OPTION POWER #1,3	FUSE 16	SPLICE 2
	18	BLK	WATERPUMP2 DIODE GND	GROUND	WATERPUMP2DIODE-2
	18	BLK	WATERPUMP1 DIODE GND	GROUND	WATERPUMP1DIODE -2
	18	BLK	SHAKER DIODE GND	GROUND	SHAKER DIODE-2
	18	BLK	WATERPUMP2 RELAY GND	GROUND	R13-86
	18	BLK	WATERPUMP1 RELAY GND	GROUND	R12-86
	18	BLK	SHAKER RELAY GROUND	GROUND	R11-86
	18	BLUE	WATER PUMP 2 DIODE	WATERPUMP2 DIODE-1	R13-87
	12	BLUE	WATER PUMP 2 POWER	R13-30	FUSE13
	18	BLUE	WATER PUMP 2	R13-85	CPU2-3
	18	BLUE	WATER PUMP 1 DIODE	WATERPUMP1DIODE-1	R12-87
	12	BLUE	WATER PUMP 1 POWER	R12-30	FUSE 11
	18	BLUE	WATER PUMP 1	R12-85	CPU2-39
	18	RED	SHAKER DIODE	SHAKER DIODDE -1	R11-87
	12	RED	SHAKER POWER	R11-30	FUSE9
	12	RED	SHAKER HOPPER	R11-85	CPU1-42
12	12	BLK	MAIN GROUND	GROUND	#6-S
12	12	BLK	MAIN GROUND	GROUND	#6-R
12	12	BLK	MAIN GROUND	GROUND	#6-P
12	12	BLK	MAIN GROUND	GROUND	#6-N
12	12	BLK	MAIN GROUND	GROUND	#6-M
12	12	BLK	MAIN GROUND	GROUND	#6-L
12	12	RED	OPTION POWER 4	NC	#6-K
12	12	RED	OPTION POWER 3	SPLICE 2	#6-J
12	12	RED	OPTION POWER 2	FUSE 17	#6-H
12	12	RED	OPTION POWER 1	SPLICE 2	#6-G
12	12	-	PLUG		#6-F
12	12	RED	12V BOOM POWER	FUSE19	#6-E
12	12	-	PLUG		#6-D
12	12	BLUE	WATERPUMP 2	R13-87	#6-C
12	12	BLUE	WATERPUMP 1	R12-87	#6-B
12	12	RED	SHAKER HOPPER	R11-87	#6-A

CPU Box, Circular Junction Connector Service Information

FOR CPU JUNCTION CONNECTORS:
#1 WATER TRAY
#2 HOPPER/SCISSOR
#3 HYD TANK/MANIFOLD
#4 CONSOLE
#5 JOHN DEERE ENGINE
#6 FUSED POWER CONNECTOR

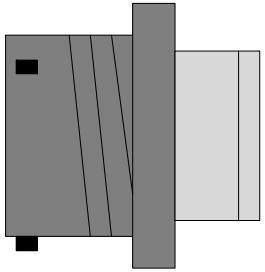

DEUTSCH HDP24-XX-XXXX CONNECTORS			
CONTACT SIZE	WIRE GAUGE	SOLID PIN CONTACT	CONTACT REMOVAL TOOL
20	16 & 18	0460-010-20141	0411-240-2005
16	16, 18 & 20	0460-202-16141	0411-310-1605
	14	0460-215-16141	0411-291-1405
12	12 & 14	0460-204-12141	114010

MOUNTING HARDWARE	
PANEL NUT	2411-001-2405
WAVE WASHER	2414-001-2486
GASKET	16-04477

CPU Box, Fuse Block Service Information

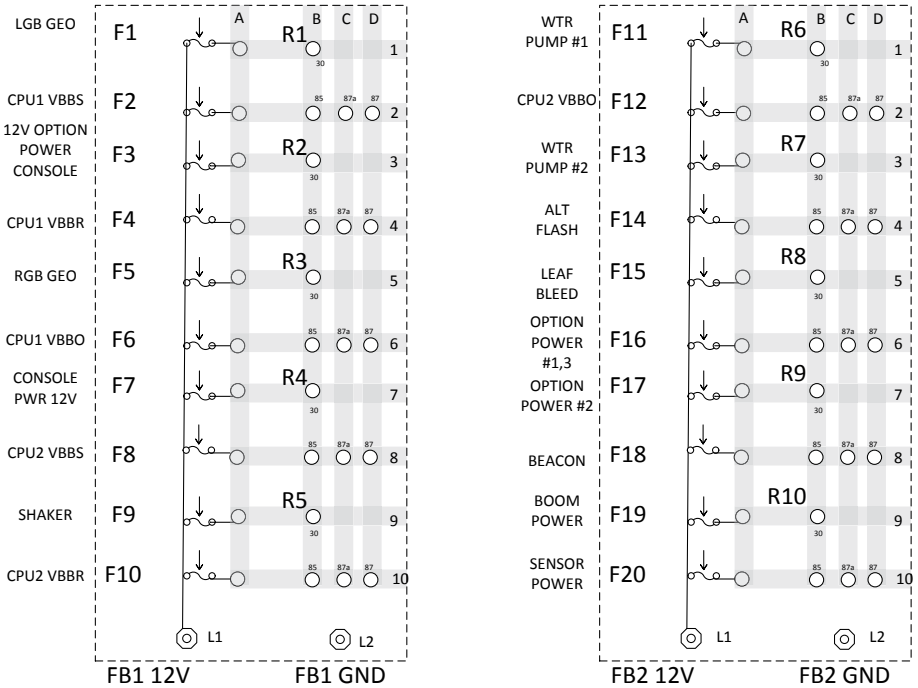

BUSSMANN 15303-2 FUSE BLOCKS DELPHI TERMINALS/SEALS				
TERMINAL SERIES	WIRE GAUGE	CABLE SEAL	SOCKET TERMINAL	TERMINAL REMOVAL TOOL
280 METRI-PACK	18	15324982	12110847	12094429
	16	15324982	12129409	
	14	15324980	12129409	
	12	15324980	12110853	
	10	15324981	12110853	

ALL FUSEBLOCK CAVITIES 280 SERIES METRI-PACK
CABLE SEAL PARTS BASED ON USE OF GXL WIRE

CPU Box, CPU Connector Service Information

FOR CPU1 & CPU 2

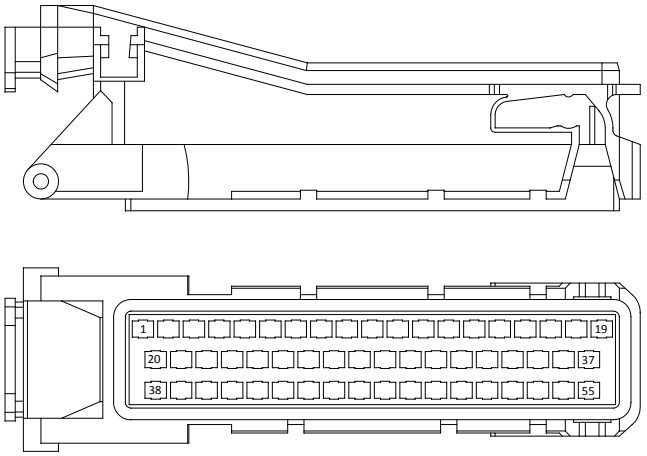

TE CONNECTIVITY CONNECTORS FOR CPU1 & CPU2			
TERMINAL SERIES	WIRE GAUGE	SOCKET TERMINAL	TERMINAL REMOVAL TOOL
JPT	20, 18 & 16	2-927770-1	1-1579007-6

CONNECTOR HOUSING 929672-1
CABLE COVER 929674-1

CPU Box, Diode & Resistor Cap Service Information

FOR DIODES:
D1 – SHAKER HOPPER DIODE
D2 – WATER PUMP #1 DIODE
D3 – WATER PUMP #2 DIODE

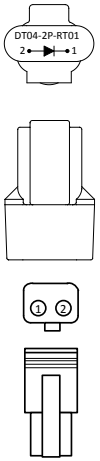

DIODE CONNECTORS D1, D2 & D3	
CONNECTOR: DEUTSCH DT06-2S	
CAV	SOLID CONTACT PART NUMBER
1	0462-201-16141
2	0462-201-16141

DIODE CAPS D1, D2 & D3
DT04-2P-RT01

FOR RESISTORS:
R2 – J1939 SERVICE PORT (NO RESISTOR CAP)
R4 – CAN OPEN TERMINATING RESISTOR

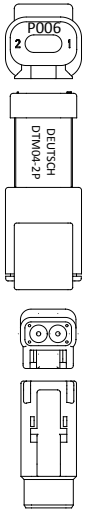

RESISTOR CONNECTOR R2 & R4	
CONNECTOR: DEUTSCH DTM06-2S	
CAV	SOLID CONTACT PART NUMBER
1	0462-005-2031
2	0462-005-2031

RESISTOR CAP R4
DTM04-2P-P006

SK-2422 SIDE BLAST HEAD

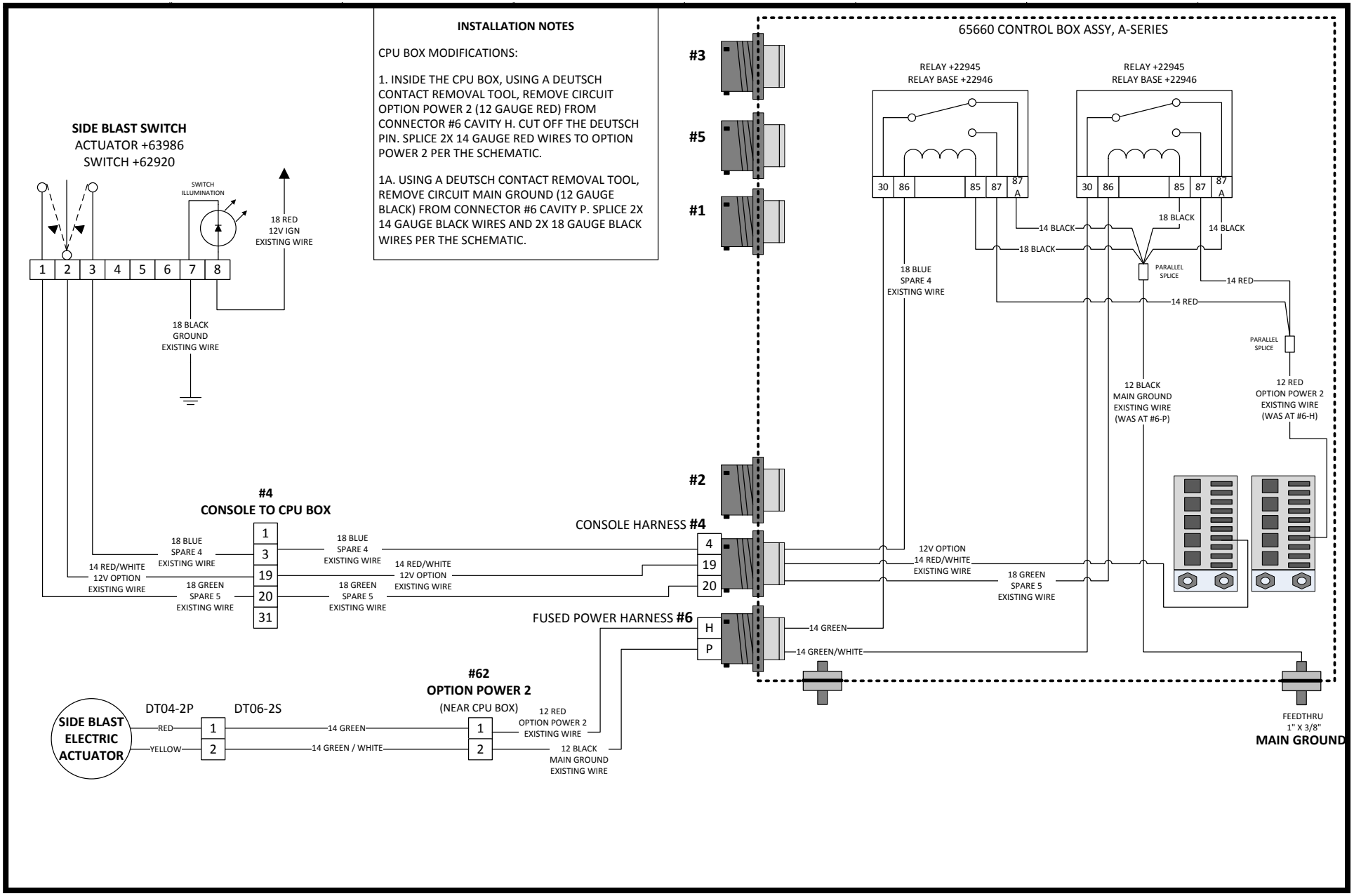

SK-2352 HOPPER SHAKER

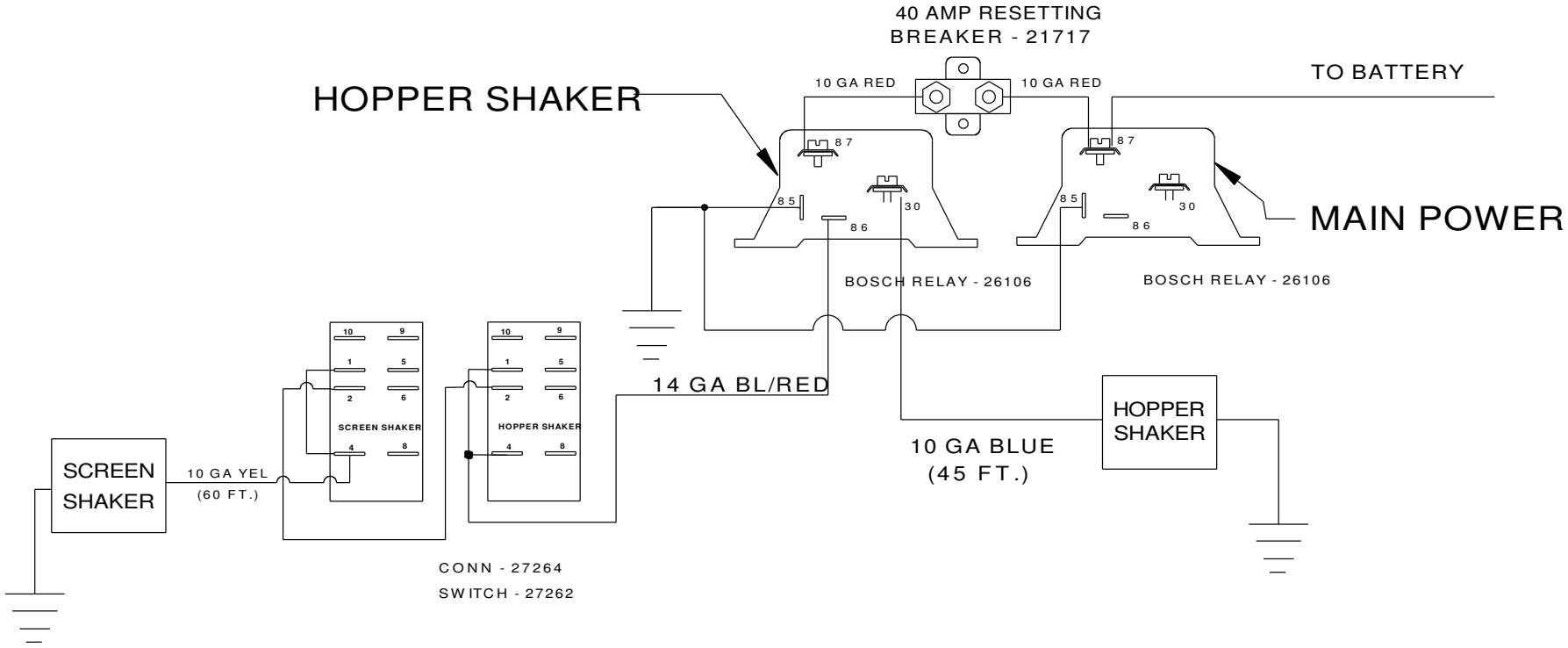

66677 HARNESS, REM THROTTLE/HYD BOOM

WIRE REPORT					
GAUGE	INSL	COLOR	DESCRIPTION	END 1	END 2
18	GXL	YELLOW	BOOM A	#236F-1	#106
18	GXL	YLW/BLK	BOOM B	#236F-2	#107
18	GXL	TAN	THROTTLE UP	#236F-3	#101
18	GXL	BRN/BLK	THROTTLE DOWN	#236F-4	#102
18	GXL	RED	12V SENSOR PWR	#236F-5	SS1-L1
18	GXL	RED	12V SENSOR PWR THROTTLE	SS1-R1	#103
18	GXL	RED	12V SENSOR PWR BOOM	SS1-R2	#104

CONNECTOR #236F			
CAV	GAUGE	COLOR	CIRCUIT
1	18	YELLOW	BOOM A
2	18	YLW/BLK	BOOM B
3	18	TAN	THROTTLE A
4	18	BRN/BLK	THROTTLE B
5	18	RED	12V SENSOR PWR
6	-	-	PLUG (114017)

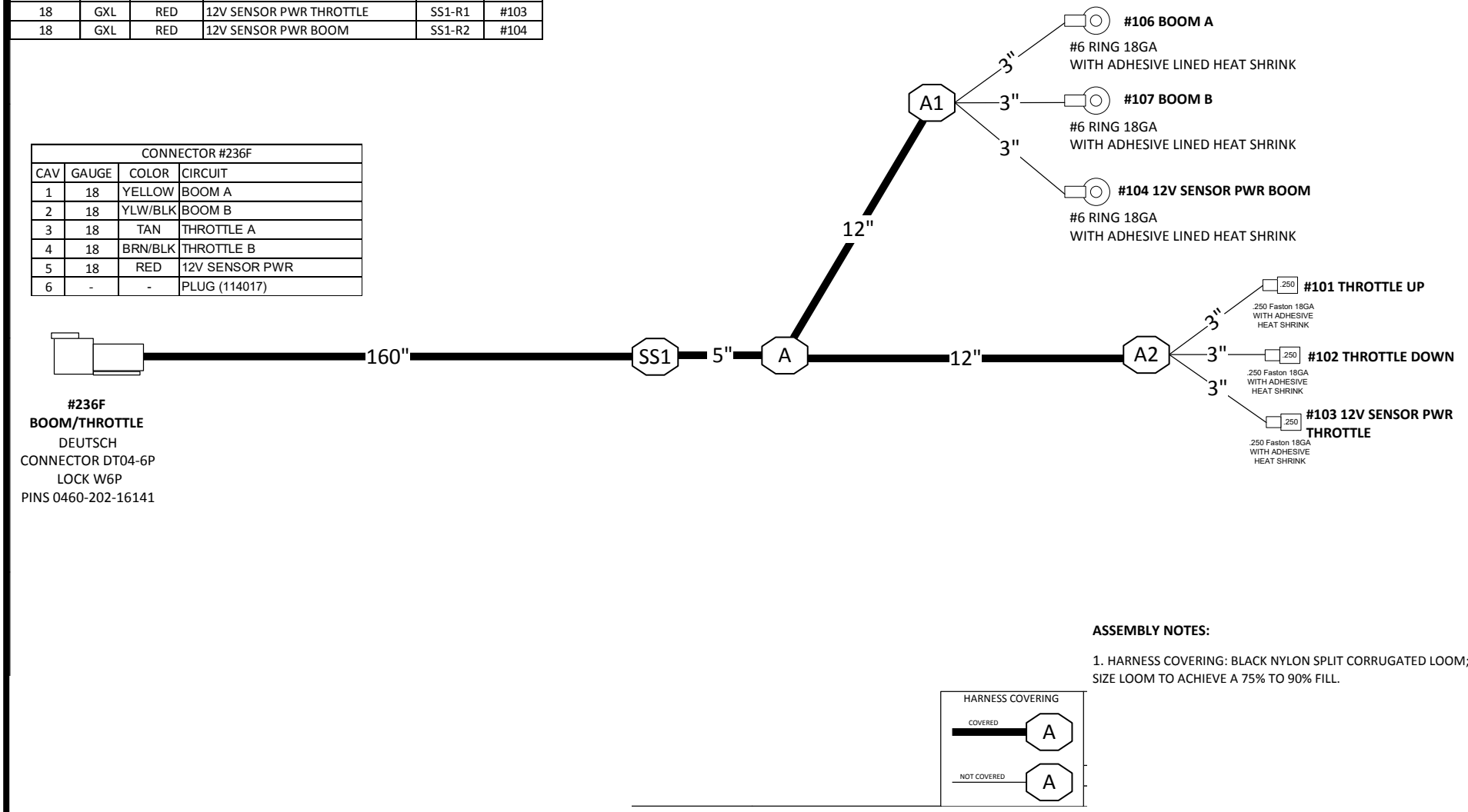

ASSEMBLY NOTES:

1. HARNESS COVERING: BLACK NYLON SPLIT CORRUGATED LOOM; SIZE LOOM TO ACHIEVE A 75% TO 90% FILL.

66689 HARNESS, REM THROTTLE/E BOOM

WIRE REPORT					
GAUGE	INSL	COLOR	DESCRIPTION	END 1	END 2
14	GXL	BLACK	BOOM A (3)	SS1-R1	#106
14	GXL	BLACK	BOOM A (4)	SS1-R2	#106A
14	GXL	WHITE	BOOM B (1)	SS2-R1	#107
14	GXL	WHITE	BOOM B (6)	SS2-R2	#107A
12	GXL	BLACK	BOOM A	#110-1	SS1-L1
12	GXL	WHITE	BOOM B	#110-2	SS2-L1
12	GXL	RED	12V BOOM POWER (2)	#109F-1	#104
12	GXL	BLACK	MAIN GROUND 2 (5)	#109F-2	#105
18	GXL	TAN	THROTTLE A (3)	#236F-3	#101
18	GXL	BRN/BLK	THROTTLE B (1)	#236F-4	#102
18	GXL	RED	12V SENSOR PWR (2)	#236F-5	#103

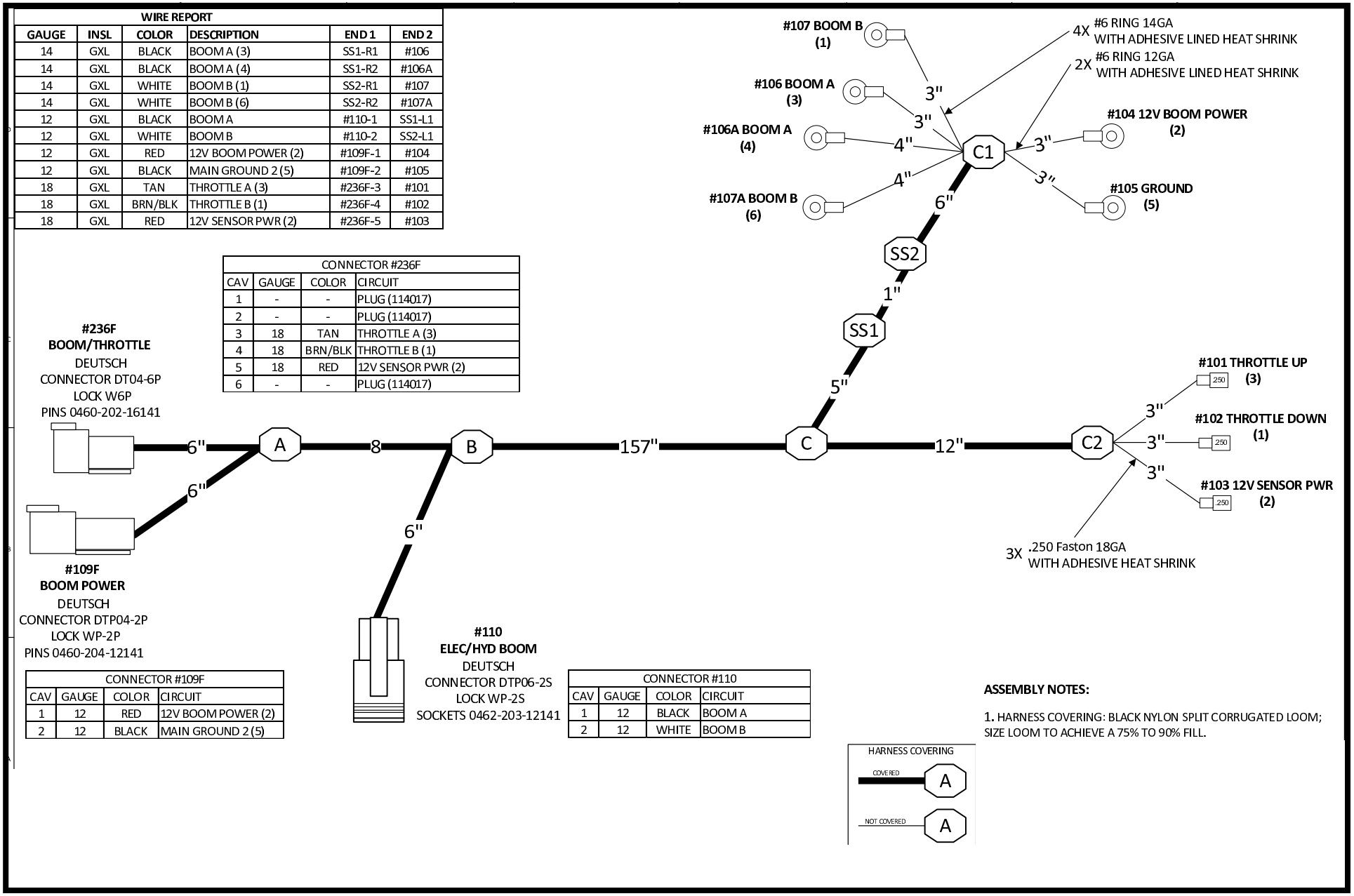

CONNECTOR #236F			
CAV	GAUGE	COLOR	CIRCUIT
1	-	-	PLUG (114017)
2	-	-	PLUG (114017)
3	18	TAN	THROTTLE A (3)
4	18	BRN/BLK	THROTTLE B (1)
5	18	RED	12V SENSOR PWR (2)
6	-	-	PLUG (114017)

CONNECTOR #109F			
CAV	GAUGE	COLOR	CIRCUIT
1	12	RED	12V BOOM POWER (2)
2	12	BLACK	MAIN GROUND 2 (5)

CONNECTOR #110			
CAV	GAUGE	COLOR	CIRCUIT
1	12	BLACK	BOOM A
2	12	WHITE	BOOM B

ASSEMBLY NOTES:

1. HARNESS COVERING: BLACK NYLON SPLIT CORRUGATED LOOM; SIZE LOOM TO ACHIEVE A 75% TO 90% FILL.

66646 HARNESS, EXTENSION, CAN MODULE

WIRE REPORT						
CABLE TYPE	GAUGE	INSL TYPE	COLOR	DESCRIPTION	END 1	END 2
-	18	GXL	BLACK	EXT CTRL GND	#42F-1	#42M-1
-	18	GXL	RED	EXT CTRL PWR	#42F-2	#42M-2
J1939/15	18	GXL	YELLOW	EXT CTRL J1939 CAN H	#42F-3	#42M-3
J1939/15	18	GXL	GREEN	EXT CTRL J1939 CAN L	#42F-4	#42M-4

CONNECTOR #42F			
CAV	GAUGE	COLOR	CIRCUIT
1	18	BLACK	EXT CTRL GND
2	18	RED	EXT CTRL PWR
3	18	YELLOW	EXT CTRL J1939 CAN H
4	18	GREEN	EXT CTRL J1939 CAN L

CONNECTOR #42M			
CAV	GAUGE	COLOR	CIRCUIT
1	18	BLACK	EXT CTRL GND
2	18	RED	EXT CTRL PWR
3	18	YELLOW	EXT CTRL J1939 CAN H
4	18	GREEN	EXT CTRL J1939 CAN L

CONNECTOR #42F
EXT CONTROLS
DEUTSCH
CONNECTOR DT04-4P
LOCK W4P
PINS 0460-202-16141

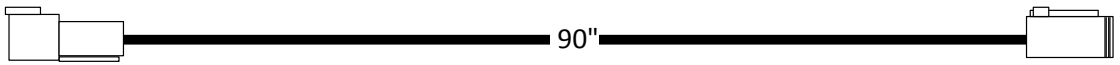

CONNECTOR #42M
EXT CONTROLS
DEUTSCH
CONNECTOR DT06-4S
LOCK W4S
SOCKETS 0462-201-16141

ASSEMBLY NOTES:

1. HARNESS COVERING: 3/8" BLACK NYLON SPLIT CORRUGATED LOOM.

2. J1939/15 CABLE CAN BE SUBSTITUTED WITH J1939/11 SPEC CABLE.

65679 HARNESS, WATER TRAY

ITEM	QTY.	PART NO.	DESCRIPTION

Water Tray Connector #1

PIN	GAUGE	COLOR	DESCRIPTION	END 1	REFERENCE	END 2
A	18	BLUE	Hopper Spraybar	#10-4	CPU2-17	#1-A
B	14	GRN	LGB GEO OUT	#102-A	R1-30	#1-B
C	18	BLUE	LGB Spray bar	#10-1	CPU2-53	#1-C
D	14	GRN/BLK	LGB GEO IN	#102-B	R2-30	#1-D
E	14	GRN	RGB GEO OUT	#19-A	R3-30	#1-E
F	18	BLUE	RGB Spray bar	#12-1	CPU2-16	#1-F
G	14	GRN/BLK	RGB GEO IN	#19-B	R4-30	#1-G
H	18	BLUE	Head Spray bar	#10-2	CPU2-35	#1-H
J	18	BLUE	Front Spray bar	#10-3	CPU2-44	#1-J
K	18	BLUE	Hopper water	#12-2	CPU2-47	#1-K
L	18	BLUE	Intake Spraybar	#12-3	CPU2-40	#1-L
M	18	BLUE	Low water	#103	CPU1-55	#1-M
N	18	BLUE	WATER LEVEL	#17-B	CPU1-27	#1-N
O	18	RED	12V SENSOR POWER	SPLICE4	F20	#1-O
P	18	GRAY	LGB light	#101-1	CPU1-43	#1-P
Q	18	GRAY	RGB light	#18-1	CPU1-4	#1-Q
R	18	BLUE	WATER FILTER	#105-B	CPU1-11	#1-R
S	18	-	PLUG			#1-S
T	18	-	PLUG			#1-T
U	18	BLK	Ground Sensor	#17-C	GND STUD	#1-U
V	14	BLK	Main Ground	SPLICE1	GND STUD	#1-V
W	14	BLK	Main Ground	SPLICE2	GND STUD	#1-W
X	14	BLK	Main Ground	SPLICE3	GND STUD	#1-X
	18	BLK	MAIN GROUND SPLICE 1	#10-5		SPLICE1
	18	BLK	MAIN GROUND SPLICE 1	#10-8		SPLICE1
	18	BLK	MAIN GROUND SPLICE 1	#12-6		SPLICE1
	18	BLK	MAIN GROUND SPLICE 1	#10-7		SPLICE1
	18	BLK	MAIN GROUND SPLICE 2	#10-6		SPLICE2
	18	BLK	MAIN GROUND SPLICE 2	#12-5		SPLICE2
	18	BLK	MAIN GROUND SPLICE 2	#12-4		SPLICE2
	18	BLK	MAIN GROUND SPLICE 2	#18-2		SPLICE2
	18	BLK	MAIN GROUND SPLICE 3	#101-2		SPLICE3
	18	BLK	MAIN GROUND SPLICE 3	#104		SPLICE3
	18	RED	12V SENSOR POWER 1	#17-A	F20	SPLICE4
	18	RED	12V SENSOR POWER 2	#105-A	F20	SPLICE4

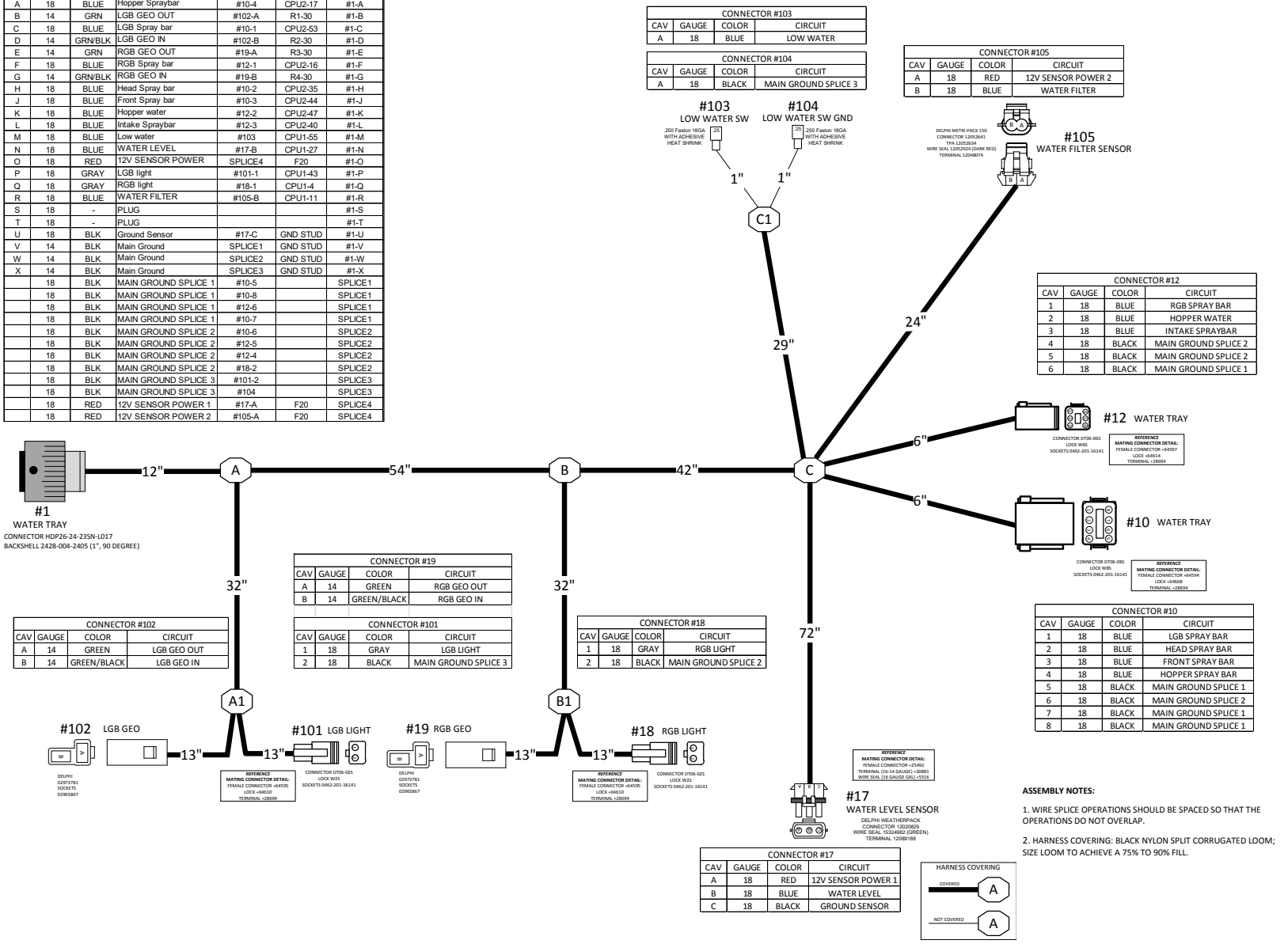

CONNECTOR #103			
CAV	GAUGE	COLOR	CIRCUIT
A	18	BLUE	LOW WATER

CONNECTOR #104			
CAV	GAUGE	COLOR	CIRCUIT
A	18	BLACK	MAIN GROUND SPLICE 3

CONNECTOR #105			
CAV	GAUGE	COLOR	CIRCUIT
A	18	RED	12V SENSOR POWER 2
B	18	BLUE	WATER FILTER

CONNECTOR #12			
CAV	GAUGE	COLOR	CIRCUIT
1	18	BLUE	RGB SPRAY BAR
2	18	BLUE	HOPPER WATER
3	18	BLUE	INTAKE SPRAYBAR
4	18	BLACK	MAIN GROUND SPLICE 2
5	18	BLACK	MAIN GROUND SPLICE 2
6	18	BLACK	MAIN GROUND SPLICE 1

CONNECTOR #19			
CAV	GAUGE	COLOR	CIRCUIT
A	14	GREEN	RGB GEO OUT
B	14	GREEN/BLACK	RGB GEO IN

CONNECTOR #102			
CAV	GAUGE	COLOR	CIRCUIT
A	14	GREEN	LGB GEO OUT
B	14	GREEN/BLACK	LGB GEO IN

CONNECTOR #101			
CAV	GAUGE	COLOR	CIRCUIT
1	18	GRAY	LGB LIGHT
2	18	BLACK	MAIN GROUND SPLICE 3

CONNECTOR #18			
CAV	GAUGE	COLOR	CIRCUIT
1	18	GRAY	RGB LIGHT
2	18	BLACK	MAIN GROUND SPLICE 2

CONNECTOR #10			
CAV	GAUGE	COLOR	CIRCUIT
1	18	BLUE	LGB SPRAY BAR
2	18	BLUE	HEAD SPRAY BAR
3	18	BLUE	FRONT SPRAY BAR
4	18	BLUE	HOPPER SPRAY BAR
5	18	BLACK	MAIN GROUND SPLICE 1
6	18	BLACK	MAIN GROUND SPLICE 2
7	18	BLACK	MAIN GROUND SPLICE 1
8	18	BLACK	MAIN GROUND SPLICE 1

CONNECTOR #17			
CAV	GAUGE	COLOR	CIRCUIT
A	18	RED	12V SENSOR POWER 1
B	18	BLUE	WATER LEVEL
C	18	BLACK	GROUND SENSOR

ASSEMBLY NOTES:

1. WIRE SPLICE OPERATIONS SHOULD BE SPACED SO THAT THE OPERATIONS DO NOT OVERLAP.

2. HARNESS COVERING: BLACK NYLON SPLIT CORRUGATED LOOM; SIZE LOOM TO ACHIEVE A 75% TO 90% FILL.